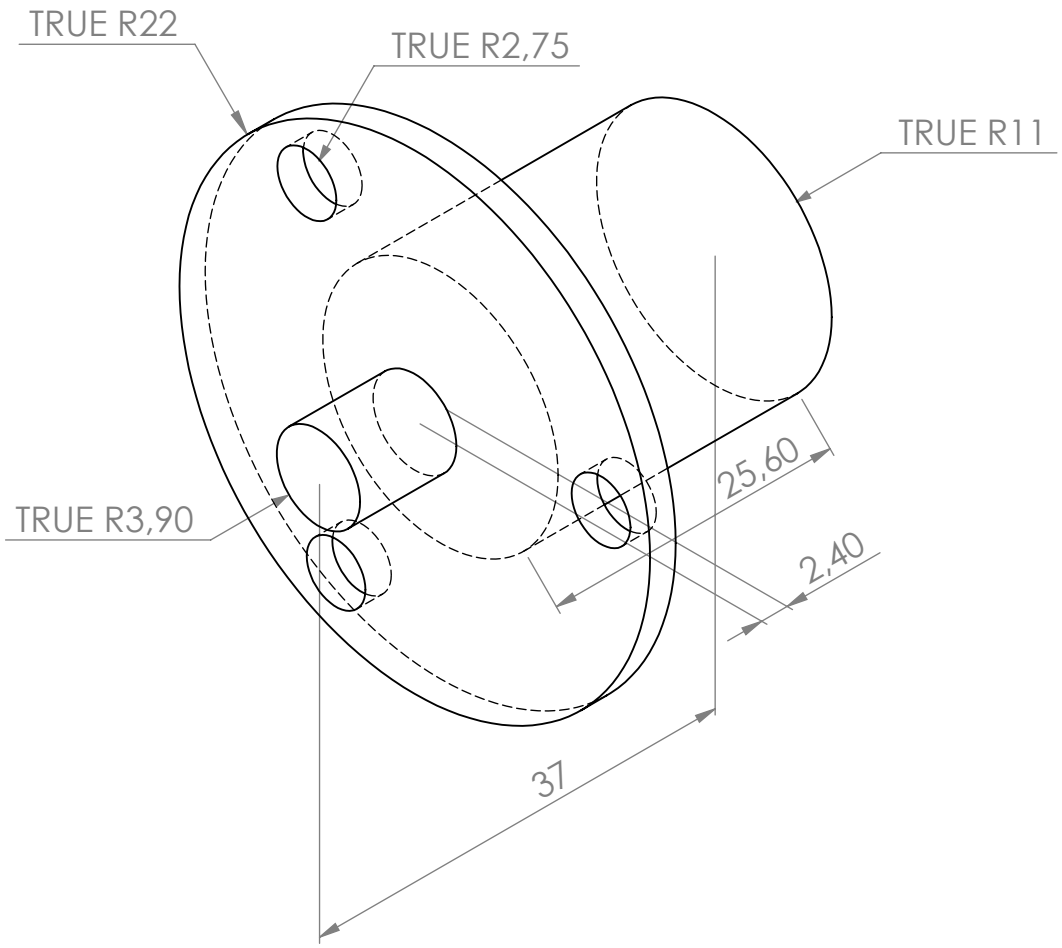

Slipring with flange from Adafruit

UNLESS OTHERWISE SPECIFIED: DIMENSIONS ARE IN MILLIMETERS SURFACE FINISH: TOLERANCES: LINEAR: ANGULAR:		FINISH:				DEBUR AND BREAK SHARP EDGES	DO NOT SCALE DRAWING	REVISION
	NAME	SIGNATURE	DATE				TITLE:	
DRAWN								
CHK'D								
APPV'D								
MFG								
Q.A				MATERIAL			DWG NO. slip_ring_with_flange	A4
				WEIGHT:			SCALE:1:1	SHEET 1 OF 1

SolidWorks Student Edition.
For Academic Use Only.