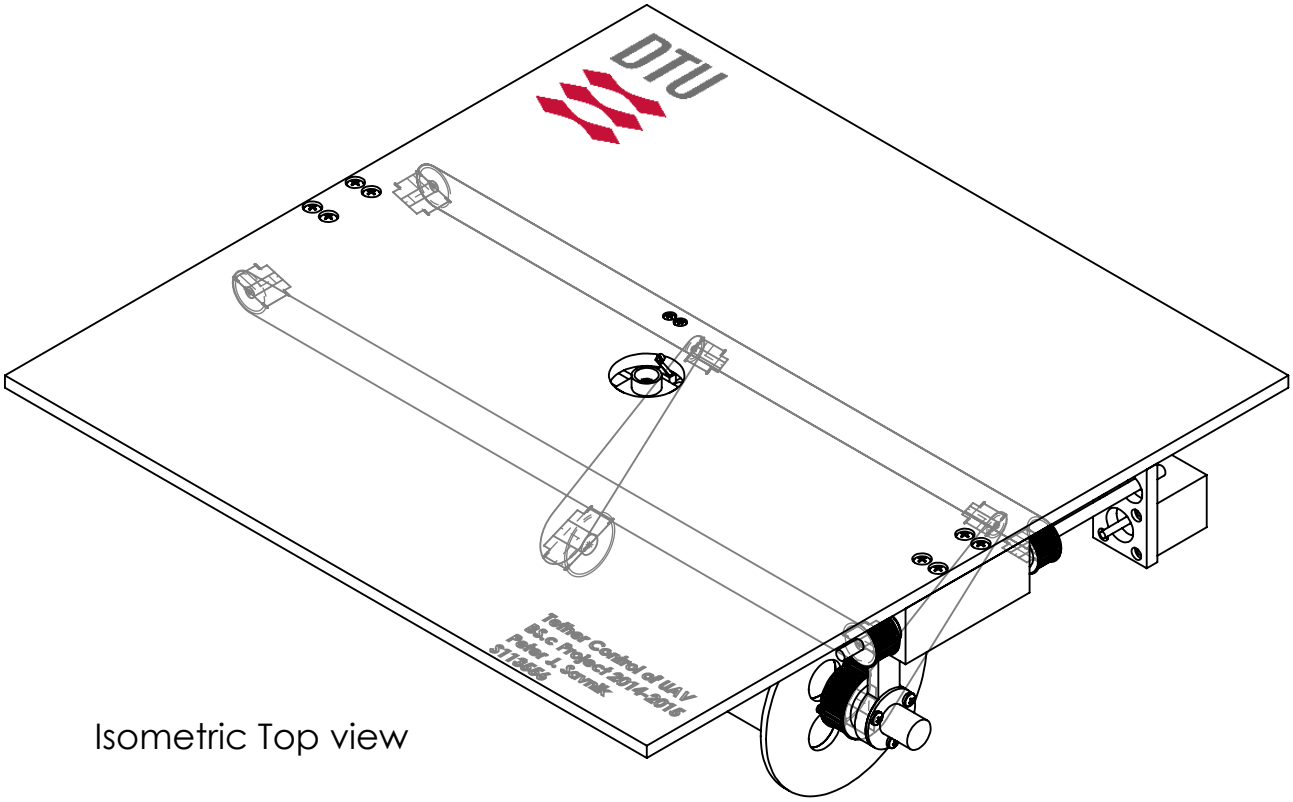

Isometric Top view

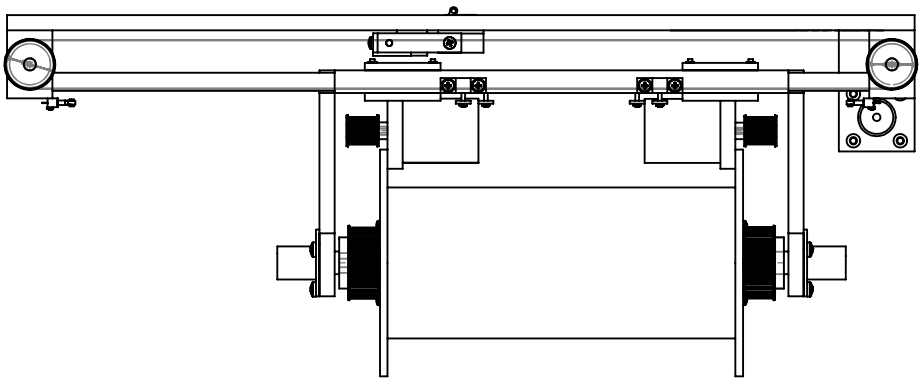

Front view

UNLESS OTHERWISE SPECIFIED: DIMENSIONS ARE IN MILLIMETERS SURFACE FINISH: TOLERANCES: LINEAR: ANGULAR:	FINISH:	DEBUR AND BREAK SHARP EDGES	DO NOT SCALE DRAWING / REVISION

	NAME	SIGNATURE	DATE
DRAWN			
CHK'D			
APPV'D			
MFG			
Q.A			

TITLE:

SolidWorks Student Edition.
For Academic Use Only.

MATERIAL

DWG NO. main_assembly

A4

WEIGHT:

SCALE:1:20

SHEET 1 OF 4

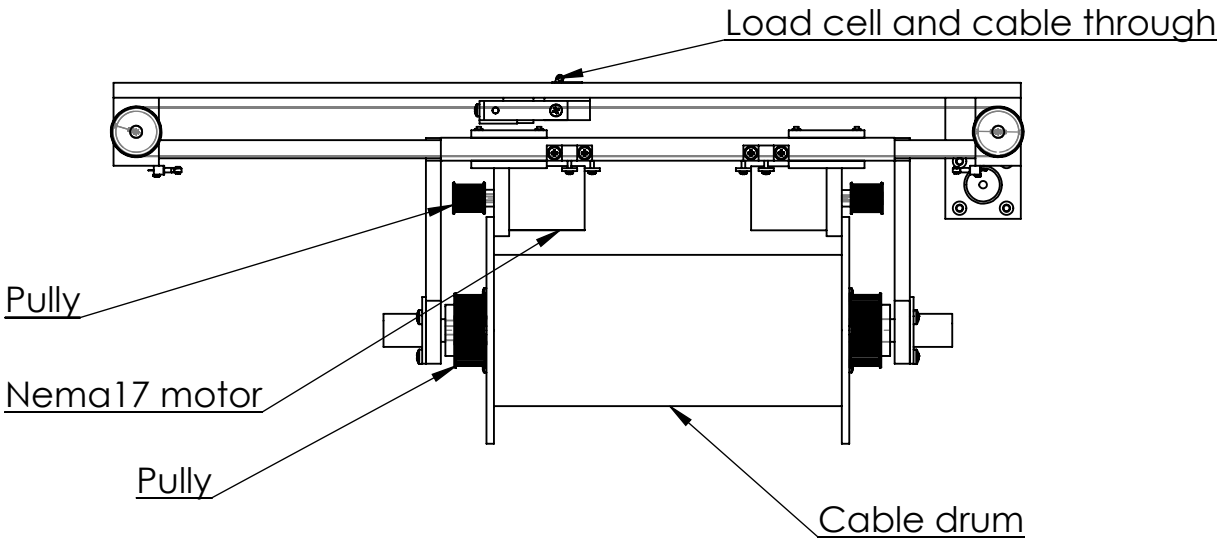

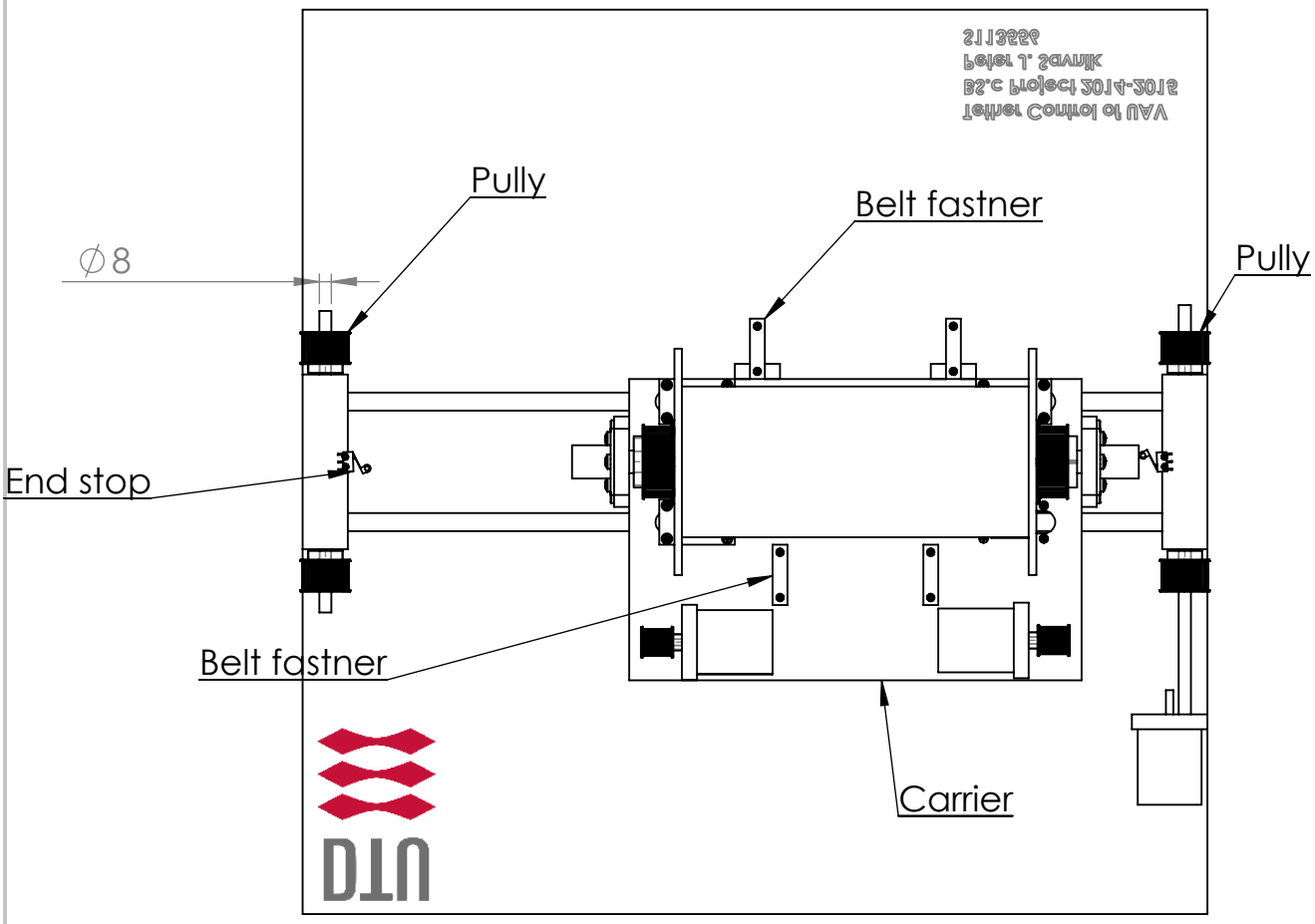

Bottom view

UNLESS OTHERWISE SPECIFIED: DIMENSIONS ARE IN MILLIMETERS SURFACE FINISH: TOLERANCES: LINEAR: ANGULAR:	FINISH:			DEBUR AND BREAK SHARP EDGES	DO NOT SCALE DRAWING	REVISION
	NAME	SIGNATURE	DATE			TITLE:
DRAWN						
CHK'D						
APPV'D						
MFG						
Q.A				MATERIAL	DWG NO.	main_assembly A4
				WEIGHT:	SCALE:1:20	SHEET 2 OF 4

SolidWorks Student Edition.
For Academic Use Only.