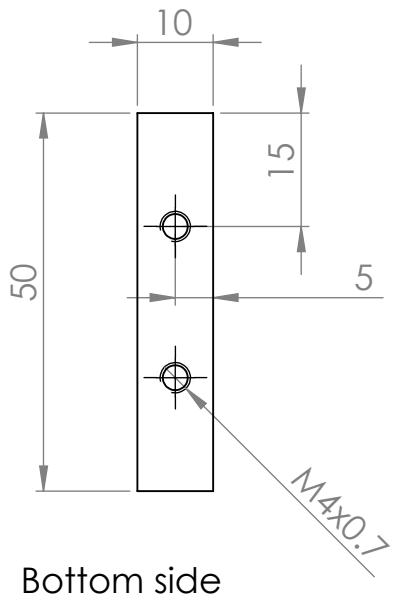

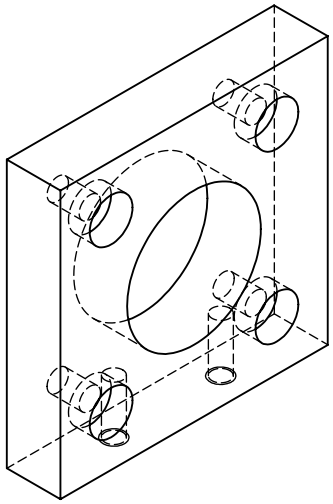

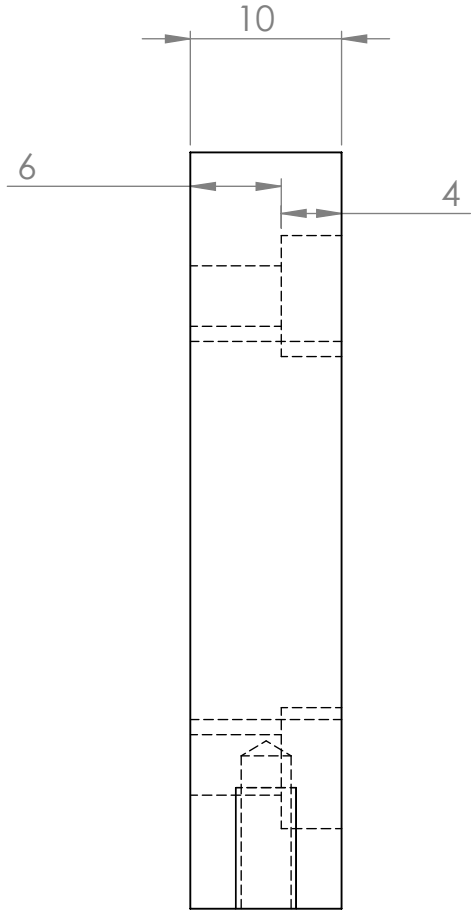

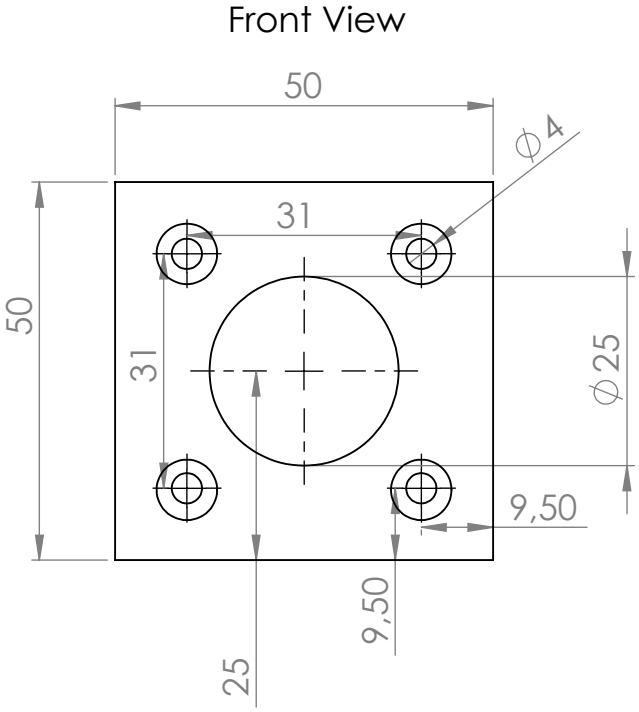

UNLESS OTHERWISE SPECIFIED: DIMENSIONS ARE IN MILLIMETERS SURFACE FINISH: TOLERANCES: LINEAR: ANGULAR:	FINISH:			DEBUR AND BREAK SHARP EDGES	DO NOT SCALE DRAWING	REVISION 3.1
					Motor holder for Nema 17 stepmotor	
	NAME	SIGNATURE	DATE		TITLE:	
DRAWN	Peter J. Savnik					
CHK'D						
APPV'D						
MFG						
Q.A				MATERIAL Alu	DWG NO. motor-holder	A4
				WEIGHT:	SCALE:1:1	SHEET 1 OF 1

SolidWorks Student Edition.
For Academic Use Only.