Theoretical background

Jan Laksar

March 2026

1 Modeling of Multiphase Machines: Example of 1st + 3rd harmonics

Let $\{r_1, r_2, \ldots, r_\kappa, \ldots, r_m\}$ denote the set of phase labels with $r_1 = a$, $r_2 = b$, etc. The vector of all m stator current waveforms as functions of the electrical angle θ is

$$\boldsymbol{i}^{r_1 r_m}(\theta) = \left[i_{r_\kappa}(\theta)\right]_{\kappa=1}^{m} = \left[i_{r_1}(\theta),\, i_{r_2}(\theta),\, \ldots,\, i_{r_m}(\theta)\right]^\top. \tag{1}$$

These currents can be transformed into the stator reference frame $\alpha - \beta$, $\boldsymbol{i}_s^{\alpha\beta} = \left[i_{s\alpha}^1, i_{s\beta}^1, i_{s\alpha}^3, i_{s\beta}^3, ..., i_{s0}\right]^\top$ using the amplitude-invariant Clarke's transform [1, 2, 3] matrix $\boldsymbol{C}$. The α axes are aligned with phase a, and the Clarke's matrix is

$$\boldsymbol{C} = \frac{2}{m}\begin{bmatrix} 1 & \cos(\frac{2\pi}{m}) & \cos(\frac{4\pi}{m}) & \cos(\frac{6\pi}{m}) & \cdots & \cos(\frac{2(m-1)\pi}{m}) \\ 0 & \sin(\frac{2\pi}{m}) & \sin(\frac{4\pi}{m}) & \sin(\frac{6\pi}{m}) & \cdots & \sin(\frac{2(m-1)\pi}{m}) \\ 1 & \cos(\frac{6\pi}{m}) & \cos(\frac{12\pi}{m}) & \cos(\frac{18\pi}{m}) & \cdots & \cos(\frac{6(m-1)\pi}{m}) \\ 0 & \sin(\frac{6\pi}{m}) & \sin(\frac{12\pi}{m}) & \sin(\frac{18\pi}{m}) & \cdots & \sin(\frac{6(m-1)\pi}{m}) \\ \vdots & \vdots & \vdots & \vdots & \ddots & \vdots \\ 1 & \cos(\frac{2(m-2)\pi}{m}) & \cos(\frac{4(m-2)\pi}{m}) & \cos(\frac{6(m-2)\pi}{m}) & \cdots & \cos(\frac{2(m-2)(m-1)\pi}{m}) \\ 0 & \sin(\frac{2(m-2)\pi}{m}) & \sin(\frac{4(m-2)\pi}{m}) & \sin(\frac{6(m-2)\pi}{m}) & \cdots & \sin(\frac{2(m-2)(m-1)\pi}{m}) \\ \frac{1}{2} & \frac{1}{2} & \frac{1}{2} & \frac{1}{2} & \cdots & \frac{1}{2} \end{bmatrix} \tag{2}$$

The inverse matrix is then $\boldsymbol{C}^{-1}$.

For third-harmonic injection, the reduced matrix $\boldsymbol{C}_5$, containing only the first four and last rows of $\boldsymbol{C}$, is for any number of phases ($m > 3$):

$$\boldsymbol{i}_{s5}^{\alpha\beta}(\theta) = \boldsymbol{C}_5 \boldsymbol{i}^{r_1 r_m}(\theta), \quad \boldsymbol{i}_s^{r_1 r_m} = \boldsymbol{C}_5^{-1} \boldsymbol{i}_{s5}^{\alpha\beta}\ . \tag{3}$$

A single phase can be obtained using only the corresponding rows of matrix $\boldsymbol{C}_5^{-1}$, e.g. $i_a = \boldsymbol{c}_{a5}^{-1} \boldsymbol{i}_{s5}^{\alpha\beta}$, where $\boldsymbol{c}_{a5}^{-1}$ is the first row of $\boldsymbol{C}_{\mathbf{5}}^{-1}$.

The stationary reference frame can be projected into the rotating (rotor) reference frames using Park transforms. Assuming the rotor fluxes (e.g., PM fluxes in PMSMs) lie in the d axes, and both frames are

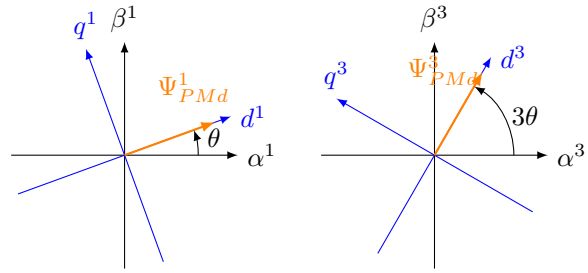

Figure 1: Rotating d^1-q^1 and d^3-q^3 reference frames.

aligned at $\theta = 0$, the two d-q reference systems are defined as: i) the d^1-q^1 system of the first harmonic rotates at ω_s and is shifted by angle θ, and ii) the d^3-q^3 system of the third harmonic rotates at $3\omega_s$ and is shifted by angle 3θ (Figure 1). The stator current vector in the rotating frames is $\boldsymbol{i}_s = [i^1_{sd}, i^1_{sq}, i^3_{sd}, i^3_{sq}, i_{s0}]^\top$ with the transforms

$$\boldsymbol{i}_s = \boldsymbol{R}(\theta)\boldsymbol{i}^{\alpha\beta}_{s5}, \quad \boldsymbol{i}^{\alpha\beta}_{s5} = \boldsymbol{R}^{-1}(\theta)\boldsymbol{i}_s \ , \tag{4}$$

where

$$\boldsymbol{R}(\theta) = \begin{bmatrix} \cos(-\theta) & -\sin(-\theta) & 0 & 0 & 0 \\ \sin(-\theta) & \cos(-\theta) & 0 & 0 & 0 \\ 0 & 0 & \cos(-3\theta) & -\sin(-3\theta) & 0 \\ 0 & 0 & \sin(-3\theta) & \cos(-3\theta) & 0 \\ 0 & 0 & 0 & 0 & 1 \end{bmatrix} . \tag{5}$$

Similarly to three-phase systems, the optimal setpoints will be designed in the rotating reference frames, i.e., the $\boldsymbol{i}_s$ is the free variable for optimization. In the star-connected windings without a neutral point connected to the inverter, the zero-sequence current loop is not closed ($i_{s0} = 0$). Hence, only four components are considered $\boldsymbol{i}_s = [i^1_{sd}, i^1_{sq}, i^3_{sd}, i^3_{sq}]^\top$. The zero-sequence voltage can increase the phase voltage and provide an additional degree of freedom in the optimization.

The single machine passive parameters are expressed as a diagonal matrix $\boldsymbol{Z} = \mathrm{diag}\left(Z^1, Z^1, Z^3, Z^3\right)$, e.g., the magnetizing inductance matrix $\boldsymbol{L}_\mu = \mathrm{diag}\left(L^1_\mu, L^1_\mu, L^3_\mu, L^3_\mu\right)$.

The electromagnetic torque arises from the interaction of the stator flux linkage $\boldsymbol{\Psi}_s$ with the stator current $\boldsymbol{i}_s$

$$T = \frac{mp}{2}\left(\boldsymbol{i}_s\right)^\top \boldsymbol{J}\boldsymbol{\Psi}_s = \frac{mp}{2}\left(\Psi^1_{sd} i^1_{sq} - \Psi^1_{sq} i^1_{sd} + 3\Psi^3_{sd} i^3_{sq} - 3\Psi^3_{sq} i^3_{sd}\right) \ , \tag{6}$$

where $\boldsymbol{J}$ is the rotation matrix

$$\boldsymbol{J} = \begin{bmatrix} 0 & -1 & 0 & 0 \\ 1 & 0 & 0 & 0 \\ 0 & 0 & 0 & -3 \\ 0 & 0 & 3 & 0 \end{bmatrix} . \tag{7}$$

The stator voltage of the machine is defined as

$$\boldsymbol{v}_s = \boldsymbol{R}_s \boldsymbol{i}_s + \omega_s \boldsymbol{J}\boldsymbol{\Psi}_s \ . \tag{8}$$

The flux linkage consists of two parts: one dependent on the stator current (defined by the inductance matrix 4×4 $\boldsymbol{L}_s^{'}$) and one from rotor excitation (the excitation flux column vector 4×1 $\boldsymbol{\Psi}_e$)

$$\boldsymbol{\Psi}_s = \boldsymbol{L}_s^{'}\boldsymbol{i}_s + \boldsymbol{\Psi}_e \ . \tag{9}$$

By substituting (9) into (8),

$$\boldsymbol{v}_s = \left(\boldsymbol{R}_s + \omega_s \boldsymbol{J}\boldsymbol{L}_s^{'}\right)\boldsymbol{i}_s + \omega_s \boldsymbol{J}\boldsymbol{\Psi}_e \ . \tag{10}$$

The torque can be expressed in the quadratic form [4]

$$T = (\boldsymbol{i}_s)^\top \boldsymbol{A}\boldsymbol{i}_s + 2\,(\boldsymbol{b})^\top \boldsymbol{i}_s \ , \tag{11}$$

where

$$\begin{aligned} \boldsymbol{A} &= \frac{mp}{4}\left(\boldsymbol{J}\boldsymbol{L}_s^{'} + \boldsymbol{L}_s^{'}\boldsymbol{J}^\top\right) = (\boldsymbol{A})^\top \ , \\ \boldsymbol{b} &= \frac{mp}{4}\left(\boldsymbol{J}\boldsymbol{\Psi}_e\right) . \end{aligned} \tag{12}$$

1.1 Permanent Magnet Synchronous Machine (PMSM)

In the linear system, the inductance matrix $\boldsymbol{L}_s^{'}$ (9) is a diagonal $\boldsymbol{L}_s^{'} = \mathrm{diag}\left(L_{sd}^1, L_{sq}^1, L_{sd}^3, L_{sq}^3\right)$, as common in the literature [5, 6, 7]. Following [4], the cross-coupling between d and q axes can be incorporated via inductance L_m for a three-phase machine. With simultaneous first- and third-harmonic components, a fully defined inductance matrix [8] and excitation flux vector are

$$\boldsymbol{L}_s^{'} = \begin{bmatrix} L_{sd}^1 & L_m^1 & L_{dd} & L_{dq} \\ L_m^1 & L_{sq}^1 & L_{qd} & L_{qq} \\ L_{dd} & L_{qd} & L_{sd}^3 & L_m^3 \\ L_{dq} & L_{qq} & L_m^3 & L_{sq}^3 \end{bmatrix}, \ \boldsymbol{\Psi}_e = \begin{bmatrix} \Psi_{ed}^1 \\ \Psi_{eq}^1 \\ \Psi_{ed}^3 \\ \Psi_{eq}^3 \end{bmatrix} . \tag{13}$$

Depending on the operating regime, some entries of $\boldsymbol{L}_s^{'}$ or $\boldsymbol{\Psi}_e$ can be neglected to simplify the model. The naming of the inductances cannot be generally applied to more harmonic components. Therefore, it is not suitable for generating Output Variables. The naming of the inductances in the .aoutvar file is described in `output_variables_description_naming.md`.

1.2 Apparent and Incremental Inductances

Two different types of inductance can be distinguished: static (apparent) and dynamic (incremental). They are generally defined as

$$\begin{aligned} L_{\mathrm{app}} &= \frac{\Psi}{i} \\ L_{\mathrm{inc}} &= \frac{d\Psi}{di} \end{aligned} \tag{14}$$

The apparent definition of inductance can be useful for general machine sizing and design. On the other hand, the incremental definition is necessary for the optimal control of the drive: the inductance matrix (12) is fully symmetrical.

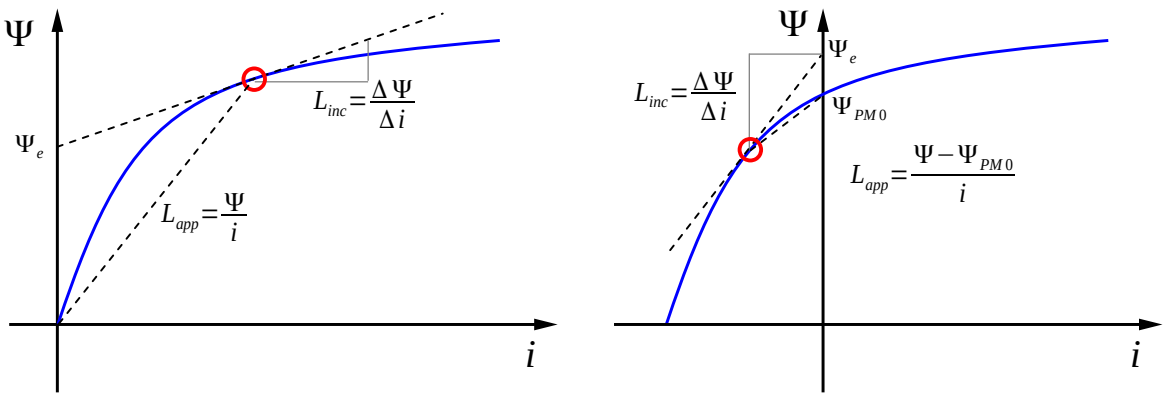

Figure 2: Definition of apparent and incremental inductance of a situation without no-load flux linkage (left) and with no-load flux linkage of permanent magnets (right)

The graphical interpretation of the apparent and incremental definitions of the inductance is shown in Fig. 2. The left figure shows a situation without an external source of flux, so in the no-load state, the flux linkage is zero. Nevertheless, when the machine is saturated, the excitation flux must be included in the model to ensure the machine's total flux linkage.

When the no-load PM flux is present, the characteristic is shifted, and the apparent definition is changed. The excitation flux is the same as the no-load PM flux for a zero-current operation, and it changes with the loading.

1.3 Modeling with Ansys Electronics Desktop

In the Ansys Electronic Desktop (EDT), the inductances are calculated directly (see Practical Ansys EDT Implementation.md file). In the PM synchronous machine, machine loading can cause asymmetry in the PM flux, which extends not only along the d-axis but also partially into the q-axis (it is NOT a virtual excitation flux but a real PM flux), see [9].

Therefore, it is beneficial to calculate the excitation flux even if the apparent inductances are used. This flux linkage is generally calculated as

$$\boldsymbol{\Psi}_e = \boldsymbol{\Psi}_s - \boldsymbol{L}_s^{'} \boldsymbol{i}_s \ . \tag{15}$$

1.4 Voltage Source

In general, an m-phase two-level voltage source inverter (VSI) generates system of m leg voltages $\boldsymbol{v}_0^{r_1 r_m}(t)$. For each phase, a total of $m-1$ different line-line voltages can be measured. The opposite line-line voltage $v_{l\text{-}l\ opp}$ is located between the chosen and the next $(m-1)/2$-th phase. The relationship between the leg and the opposite line-line voltages can be written as

$$\boldsymbol{v}_{l\text{-}l\ opp}^{r_1 r_m}(t) = \boldsymbol{D} \boldsymbol{v}_0^{r_1 r_m}(t) \ , \tag{16}$$

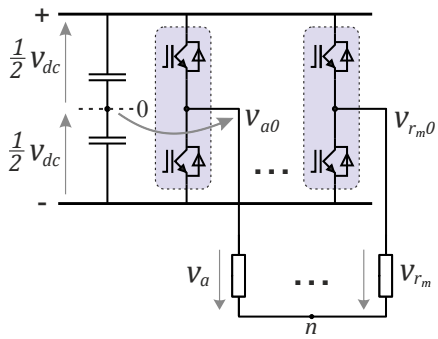

Figure 3: Multiphase VSI

where r_1 - r_m define different phases (see Section 1), and

$$v_{l\text{-}l\ opp}^{r_1 r_m}(t) = \left[v_{r_\kappa, r_{\kappa'}}(t)\right]_{\kappa=1}^{m} \ , \tag{17}$$

where

$$\kappa' = \left(\left(\kappa - 1 + \frac{m-1}{2}\right) \bmod m\right) + 1 \ . \tag{18}$$

The elements of the matrix $\boldsymbol{D}$ in the i-th row and j-th column of $D_{i,j}$ are defined as

$$D_{i,j} = \begin{cases} 1 & \text{for } j = i, \\ -1 & \text{for } j = i + \frac{m-1}{2} \text{ or } i = j + \frac{m+1}{2}, \\ 0 & \text{otherwise.} \end{cases} \tag{19}$$

The relationship between the phase voltages $\boldsymbol{v}^{r_1 r_m}(t)$ and opposite line-line voltages is obtained by the replacement of one row (usually the last one) of $\boldsymbol{D}$ by the system balance condition $\sum \boldsymbol{v}^{r_1 r_m}(t) = 0$

$$\boldsymbol{v}_{l\text{-}l\ opp}^{r_1 r_m}(t) = \boldsymbol{D}_0 \boldsymbol{v}^{r_1 r_m}(t) \ . \tag{20}$$

For the example of a five-phase system, the equation (20) will be modified as follows:

$$\begin{bmatrix} v_{ac}(t) \\ v_{bd}(t) \\ v_{ce}(t) \\ v_{da}(t) \\ 0 \end{bmatrix} = \begin{bmatrix} 1 & 0 & -1 & 0 & 0 \\ 0 & 1 & 0 & -1 & 0 \\ 0 & 0 & 1 & 0 & -1 \\ -1 & 0 & 0 & 1 & 0 \\ 1 & 1 & 1 & 1 & 1 \end{bmatrix} \begin{bmatrix} v_a(t) \\ v_b(t) \\ v_c(t) \\ v_d(t) \\ v_e(t) \end{bmatrix} \ . \tag{21}$$

The motor phase terminal voltages can be calculated from this matrix.

References

[1] E. Levi, R. Bojoi, F. Profumo, H. Toliyat, and S. Williamson, "Multiphase induction motor drives–a technology status review," *IET Electric Power Applications*, vol. 1, no. 4, pp. 489–516, 2007.

[2] T. Komrska, T. Glasberger, and Z. Peroutka, "Universal pwm modulator for multiphase drives with a minimum infinity-norm approach," *IEEE Transactions on Industrial Electronics*, vol. 63, no. 10, pp. 5979–5987, 2016.

[3] A. G. Yepes, J. Doval-Gandoy, and H. A. Toliyat, "Improvement in dc-link utilization with reduced current and torque deterioration for five-phase drives by combination of circulating-current filters and simple carrier-based pwm based on closed-form expressions," *IEEE Transactions on Industrial Electronics*, vol. 68, no. 2, pp. 960–971, 2021.

[4] H. Eldeeb, C. M. Hackl, L. Horlbeck, and J. Kullick, "A unified theory for optimal feedforward torque control of anisotropic synchronous machines," *International Journal of Control*, vol. 91, no. 10, pp. 2273–2302, 2018.

[5] Y. Qin, P. Zhou, and H. Xu, "Virtual-signal-injection based dual-plane mtpa control for five-phase pmsm," in *2021 Global Reliability and Prognostics and Health Management (PHM-Nanjing)*, pp. 1–5, IEEE, 2021.

[6] D. Ghasemi, J. Siahbalaee, and M. Divandari, "Optimal control strategy of five-phase pmsms in a wide speed range using third harmonics," *International Transactions on Electrical Energy Systems*, vol. 2025, no. 1, p. 4373929, 2025.

[7] D. Casadei, M. Mengoni, A. Tani, G. Serra, and L. Zarri, "Torque maximization in high-torque density multiphase drives based on induction motors," in *2010 IEEE Energy Conversion Congress and Exposition*, pp. 3896–3902, IEEE, 2010.

[8] A. Cervone and O. Dordevic, "Maximum torque per ampere algorithm for five-phase synchronous reluctance machines," *IEEE Transactions on Industrial Electronics*, vol. 69, no. 10, pp. 9721–9730, 2021.

[9] J. Laksar and J. Drazan, "Finite element calculation of inductances of internal permanent magnet motors," in *2022 20th International Conference on Mechatronics-Mechatronika (ME)*, pp. 1–6, IEEE, 2022.