ETH zürich

ICT: Manufacturing of Integrated Circuits

A short (and simplified) summary

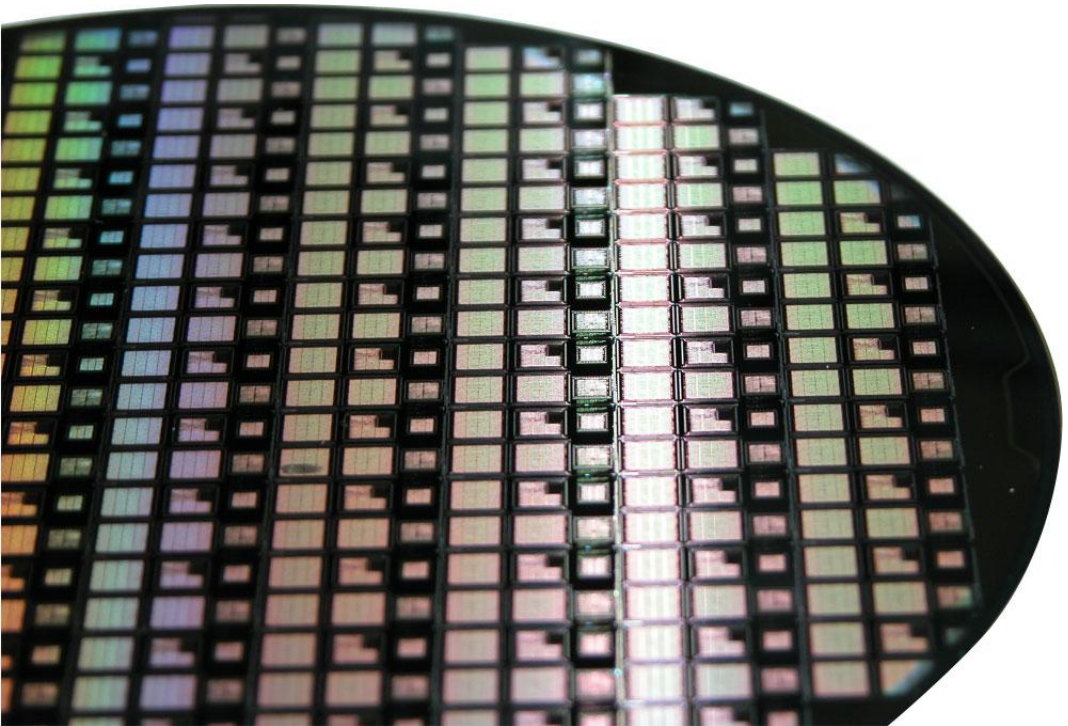

12 March 2025

Luca Benini

Frank K. Gürkaynak

Where are we in the lecture

- **Our lecture is about how to design ICs,**
- **We have covered some basics**
  - Business side of IC Design and how open source EDA fits in (Lecture 1)
  - Front-end design and a System Verilog Refresher (Lecture 2)
  - Synthesis and CMOS gates (Lecture 3)
  - A brief intro to our example design (Croc) which we use for exercises and projects
    - Simple refresher on (RISC-V) cores
    - Components of Croc and how they are connected
- **Now it is time to jump into meat of VLSI2**
  - How are ICs manufactured (simplified)
  - Will help us understand some of the constraints of IC Design better

Where are we

Week	Short	Content
1	INTRO	Why this course, design flow, case for an open-source EDA flow
2	RTL	Refresher on System Verilog
3	Netlist	Logic synthesis, basics of digital circuit timing, Croc our example SoC we will use in class
4	**ICT**	**Short summary of IC manufacturing**
5	LEF	Standard cells, routing layers
6	DEF	Floorplanning, I/O rings, ESD structures, packaging
7	LIB	Timing, Clock trees, Process corners
8	SDF	Parasitics, extraction, issues in timing, crosstalk
9	GDS	Placement, routing, chip finishing, DRC and LVS
10	VCD	Power analysis and IR Drop
11	Project	Discussion on your final project, Q&A session
12	WGL	IC Testing, ATPG, JTAG, BIST
13	PPA	Properly reporting performance, power, area in IC Design
14	Final	Final thoughts, reserve

Goals for this lecture

- **Understand the materials that we use for building ICs**
  - Conductors, insulators, semiconductors
  - What is MOS technology, why is it great
  - What is so special about the transistor
- **Basic steps of manufacturing**
  - (Photo)lithography, implantation, material deposition, etching, cleaning, polishing
  - The challenges involved in finding matching materials with good properties
- **Step by step instructions for manufacturing**
  - Using a rather conventional process
  - To get an idea about what is involved
  - Will help us understand what limitations are

Watch this video – Matt explains the process at IHP

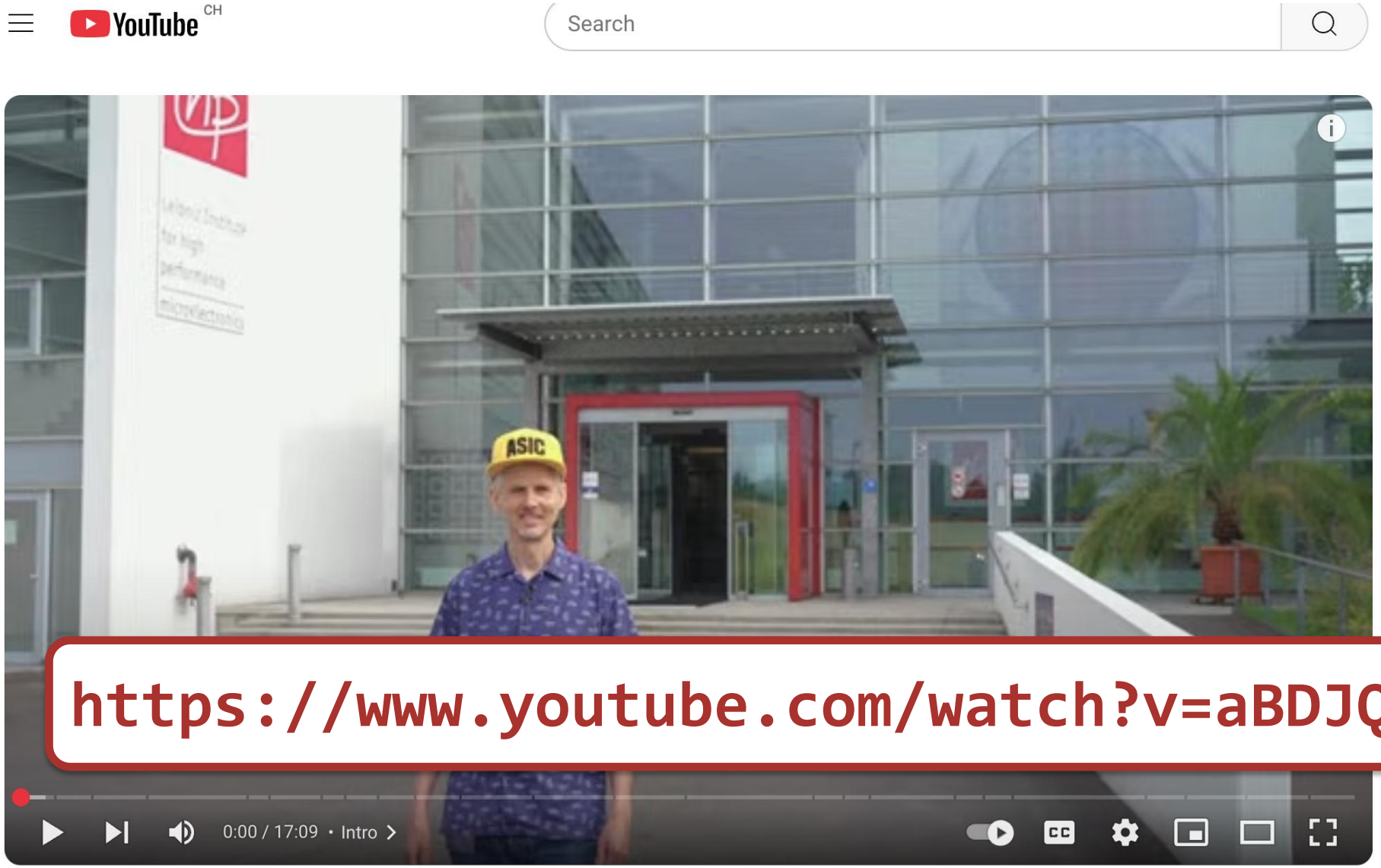

https://www.youtube.com/watch?v=aBDJQ9NYTEU

To conduct or not to conduct

Conductors

- We need electrical current
  - Power
  - Signals
- Ideally no losses
  - Defined by conductivity (ρ)
  - Material should not have resistance
  - Some materials are better
- Other issues
  - Need to be compatible to process

Insulators

- Need to separate conductors
  - We need multiple signals, power
- Ideally perfect separation
  - No current flow between conductors
- Other issues
  - Dielectric constant/permitivity (ε)
    - We want this high for capacitors
    - Low if we are avoiding parasitic capacitance
  - Need to be compatible to process

What is the deal with Semiconductors ?

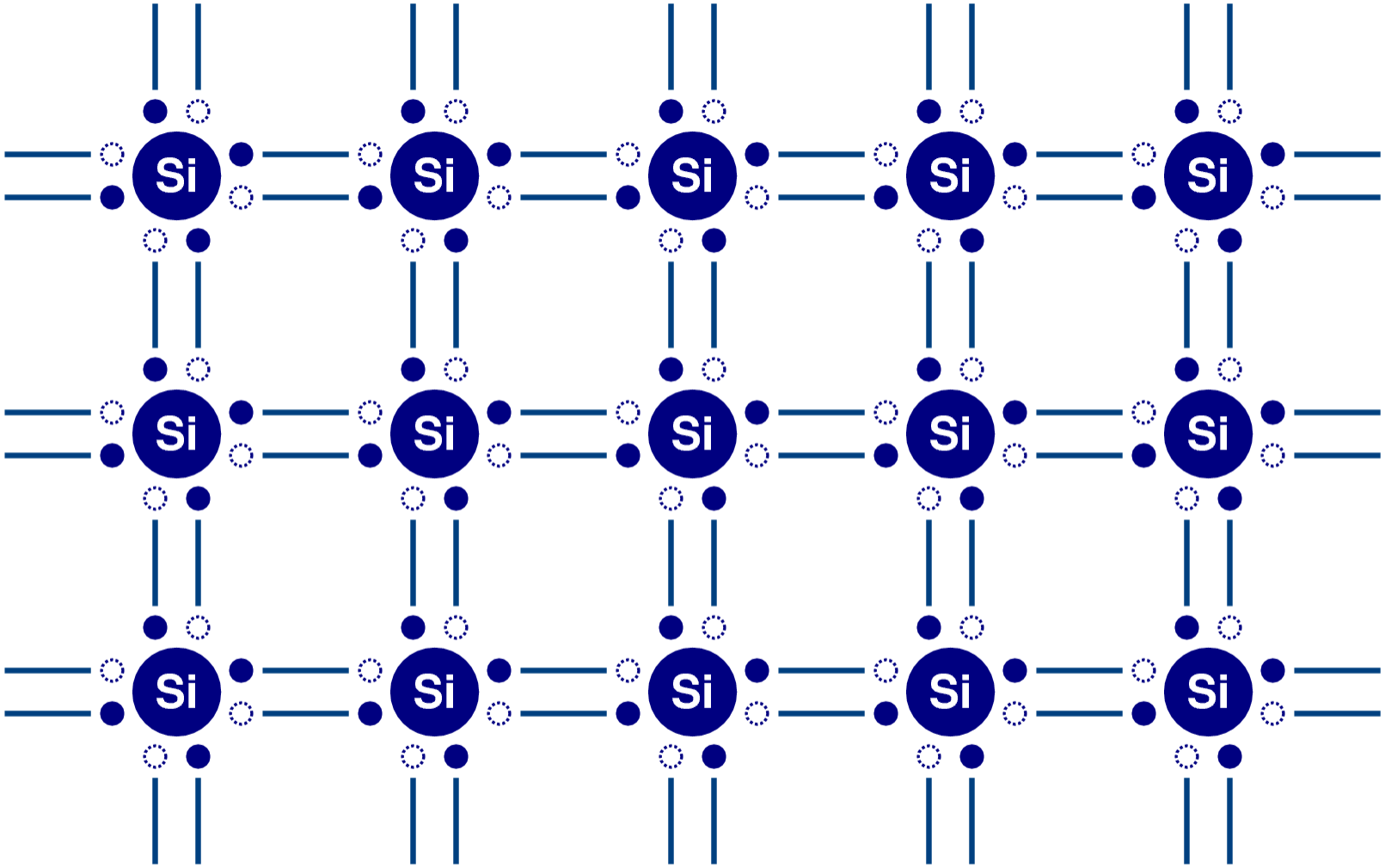

We can replace atoms in this perfect structure

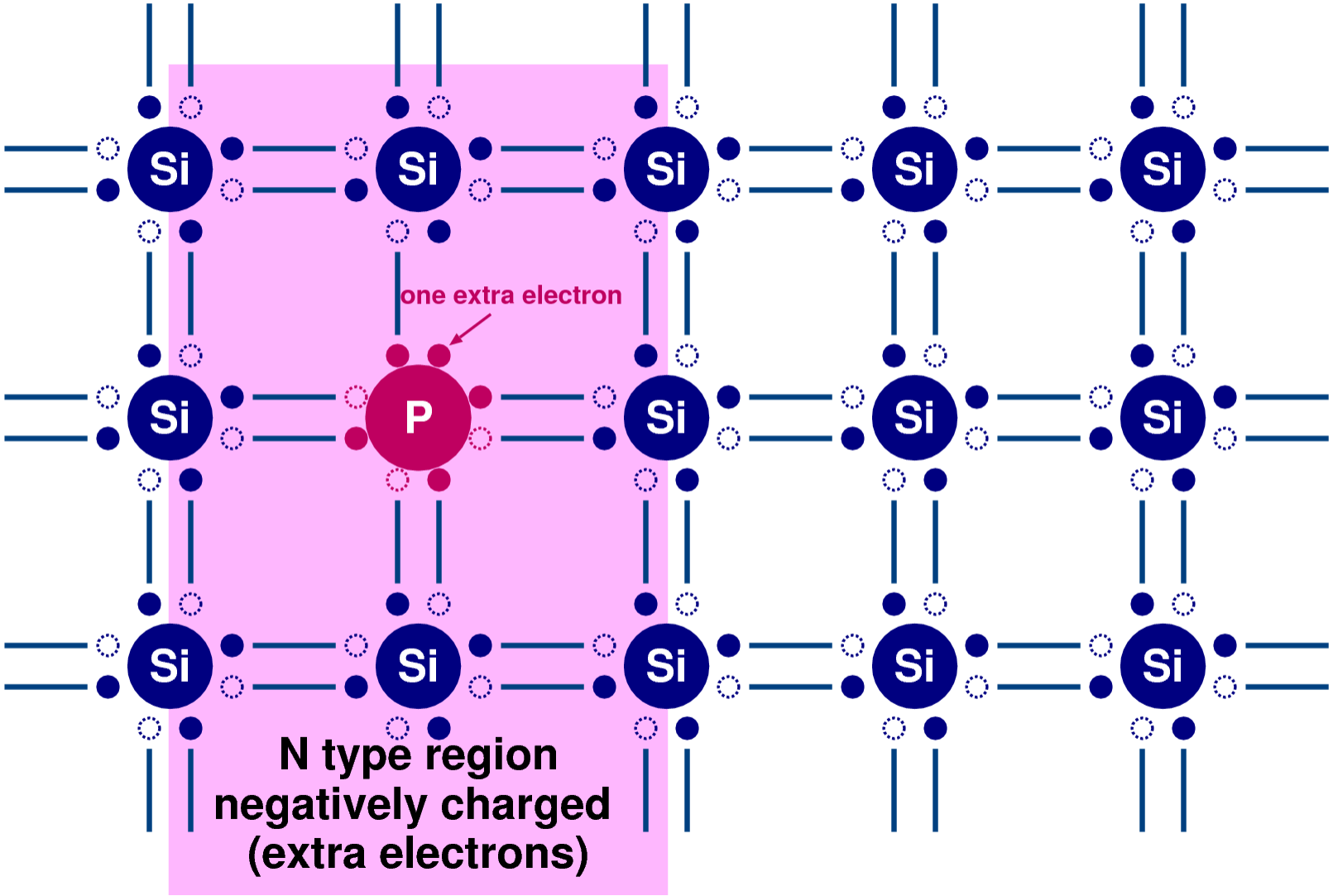

… and give some *electrical character*

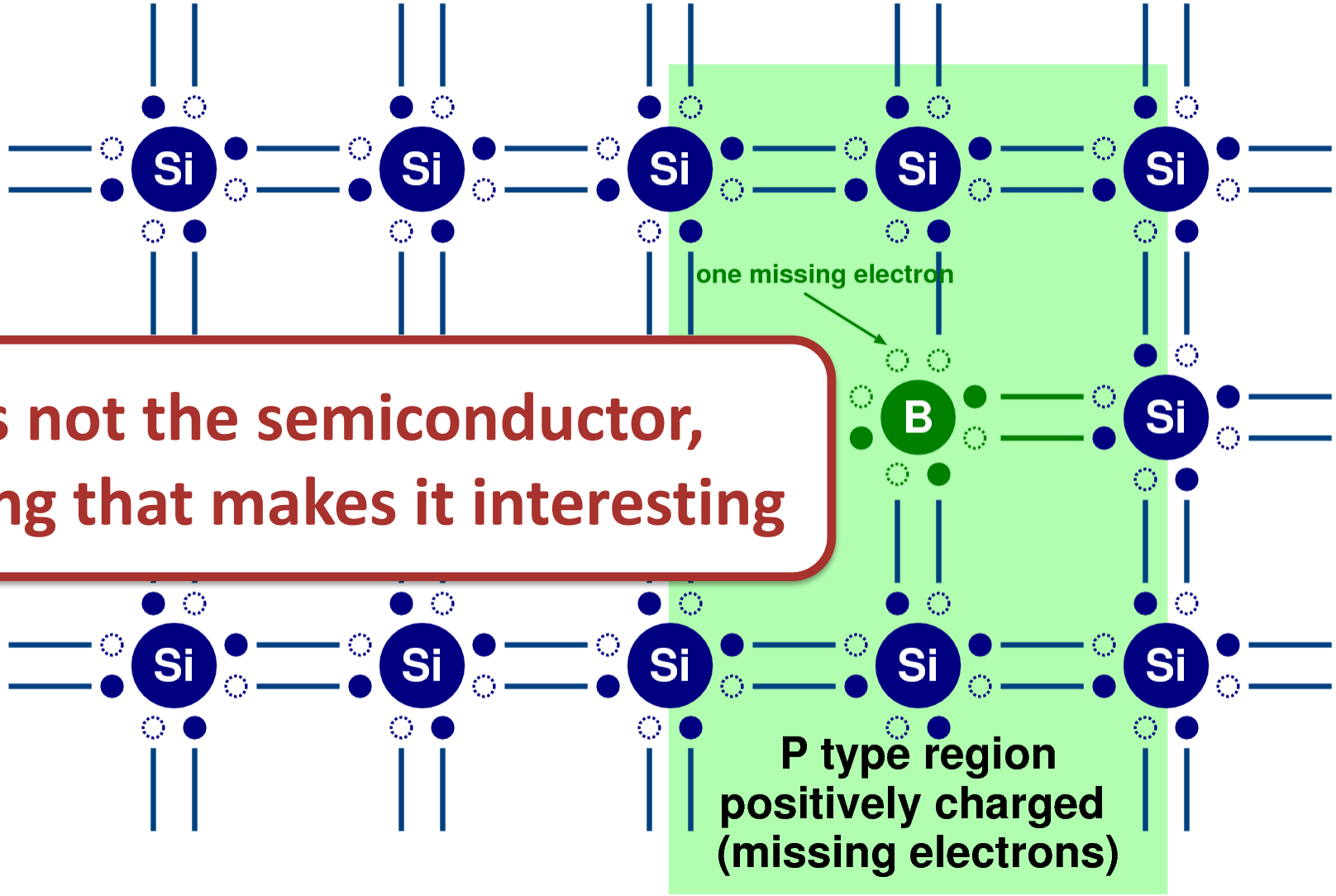

Basically, it is not the semiconductor, but the doping that makes it interesting

What is so great about semiconductors

- **You can "engineer" its properties**
  - Make it **P type** by injecting type-III elements (B, Ga, In)
  - Make it **N type** by injecting elements from type-V (P,As)
- **You can control the amount of doping**
  - Highly doped (i.e. p^{++}, n^{+}), lightly doped (i.e. p^{-})
  - Doping concentration 10^{15} .. 10^{20}, a fraction of *Avogadro's number*
- **You can generate P and N regions (pn junctions) next to each other**
  - Allows you to make interesting electrical devices
  - Diodes, transistors, thyristors..

Remember the transistor

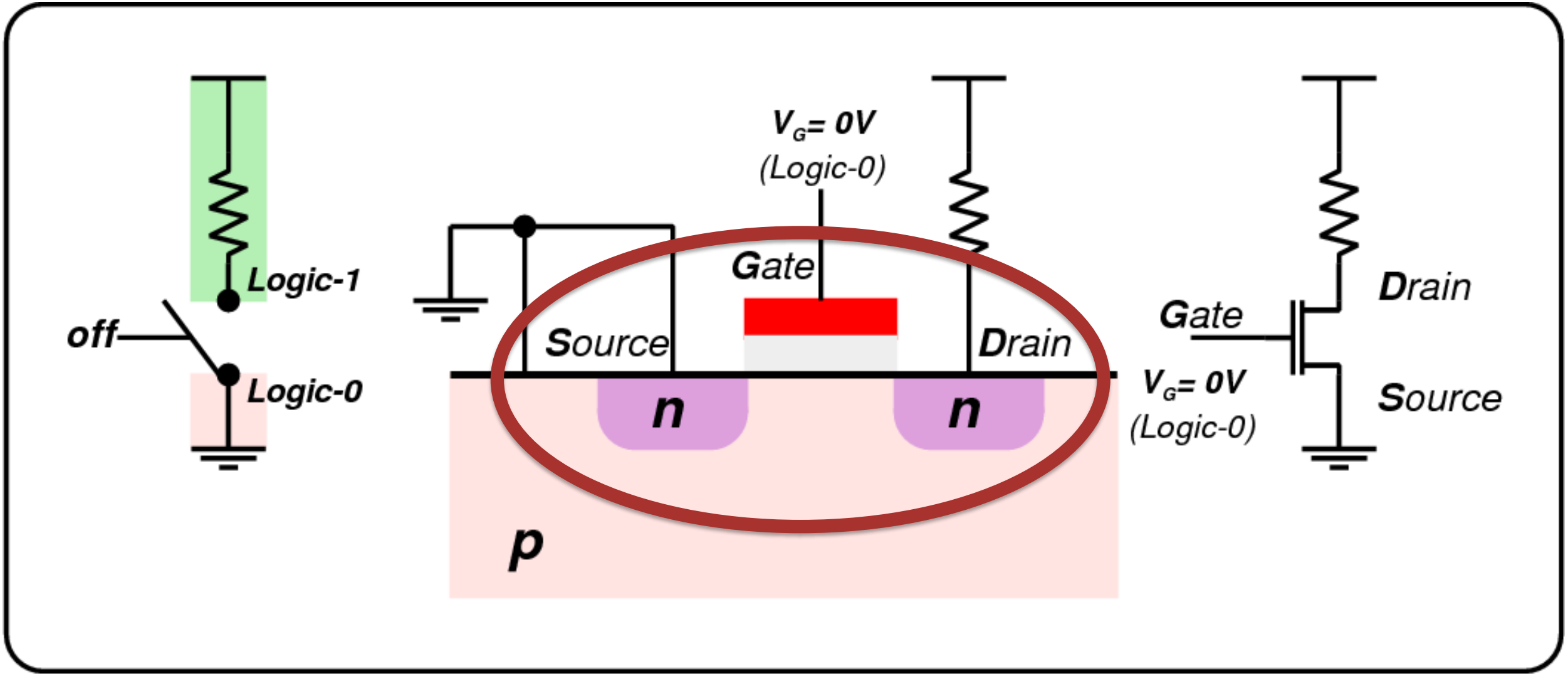

Let’s take a look

For 30+ years the gate was NOT metal but polysilicon!

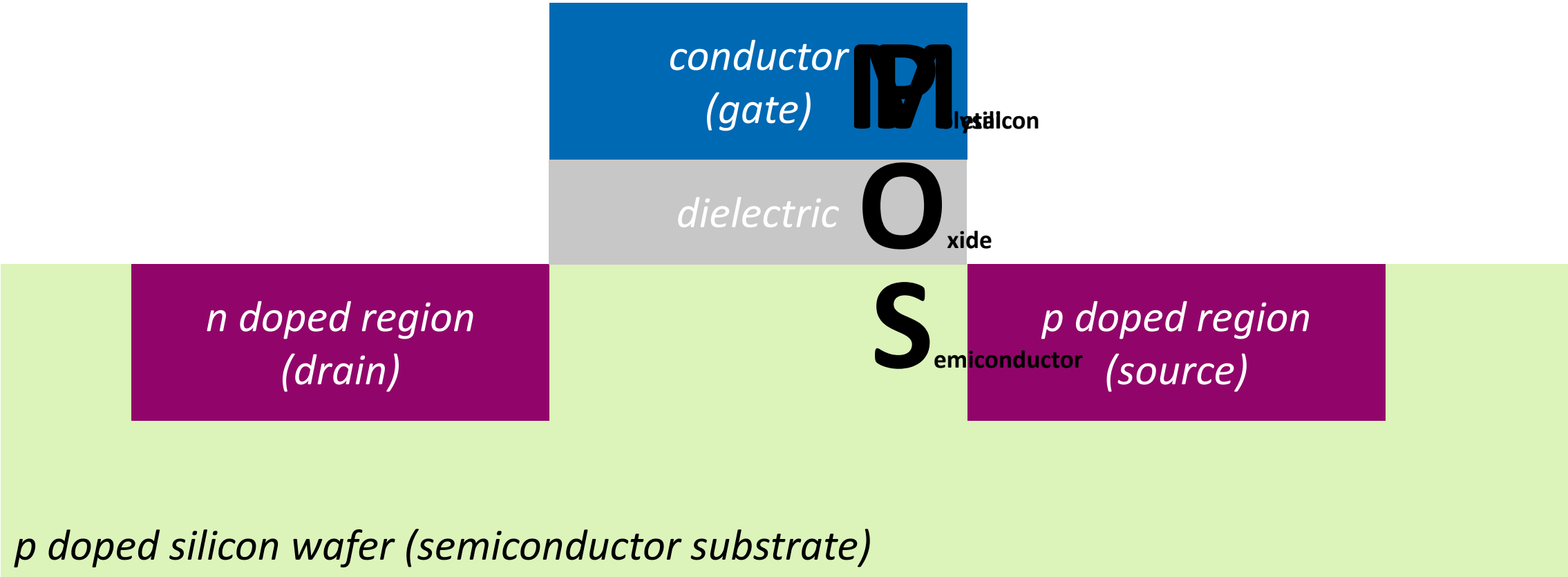

Moore's Law wants to shrink this structure

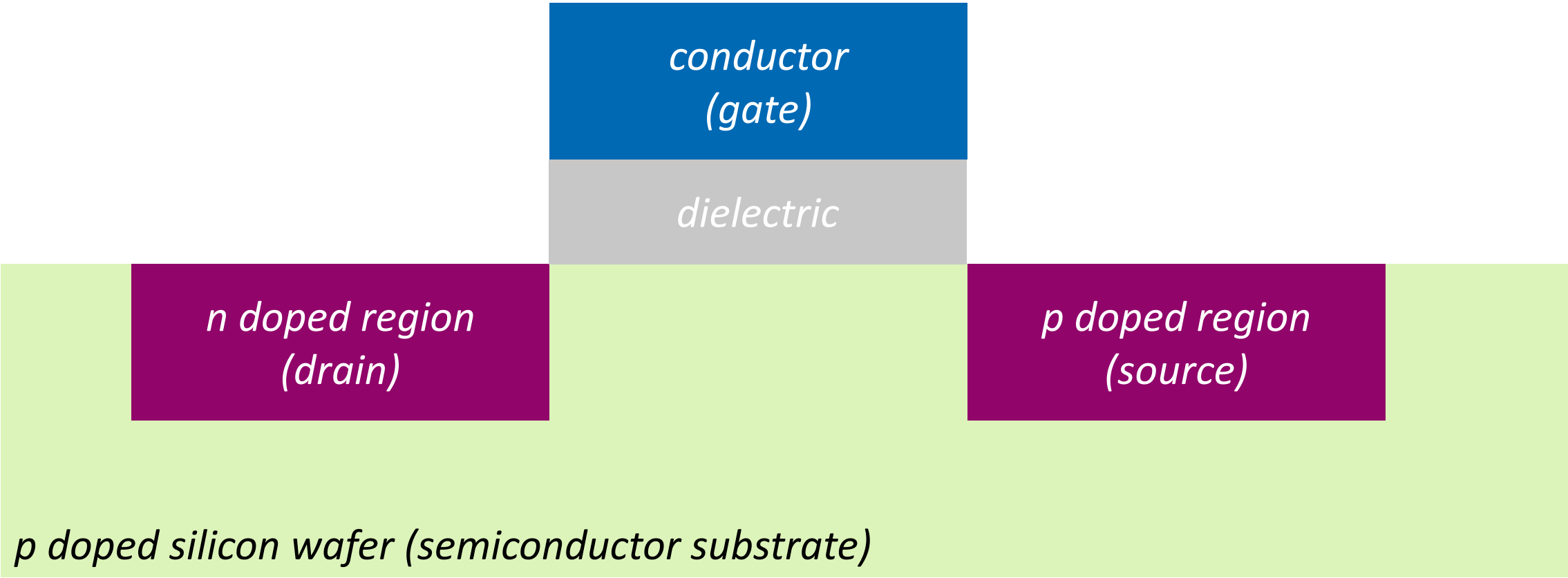

Moore's Law wants to shrink this structure

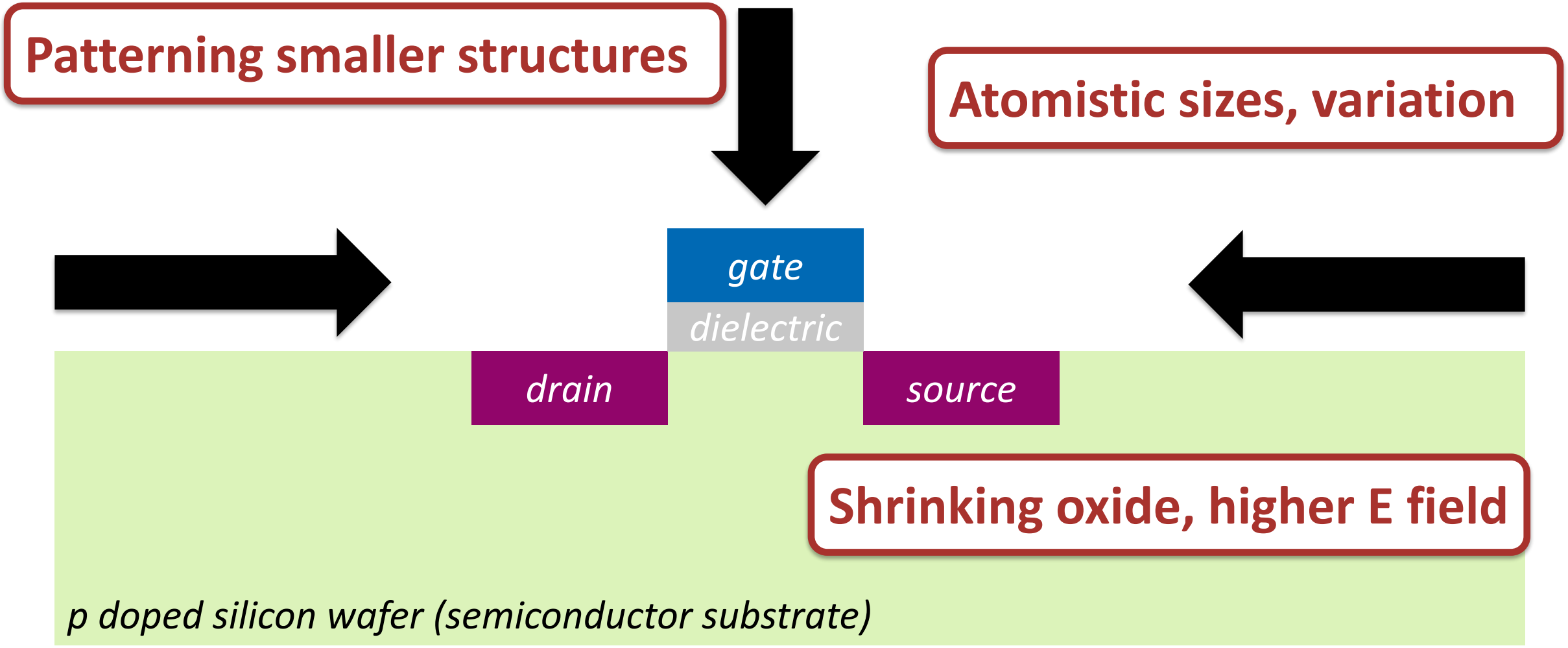

You also need to access these structures

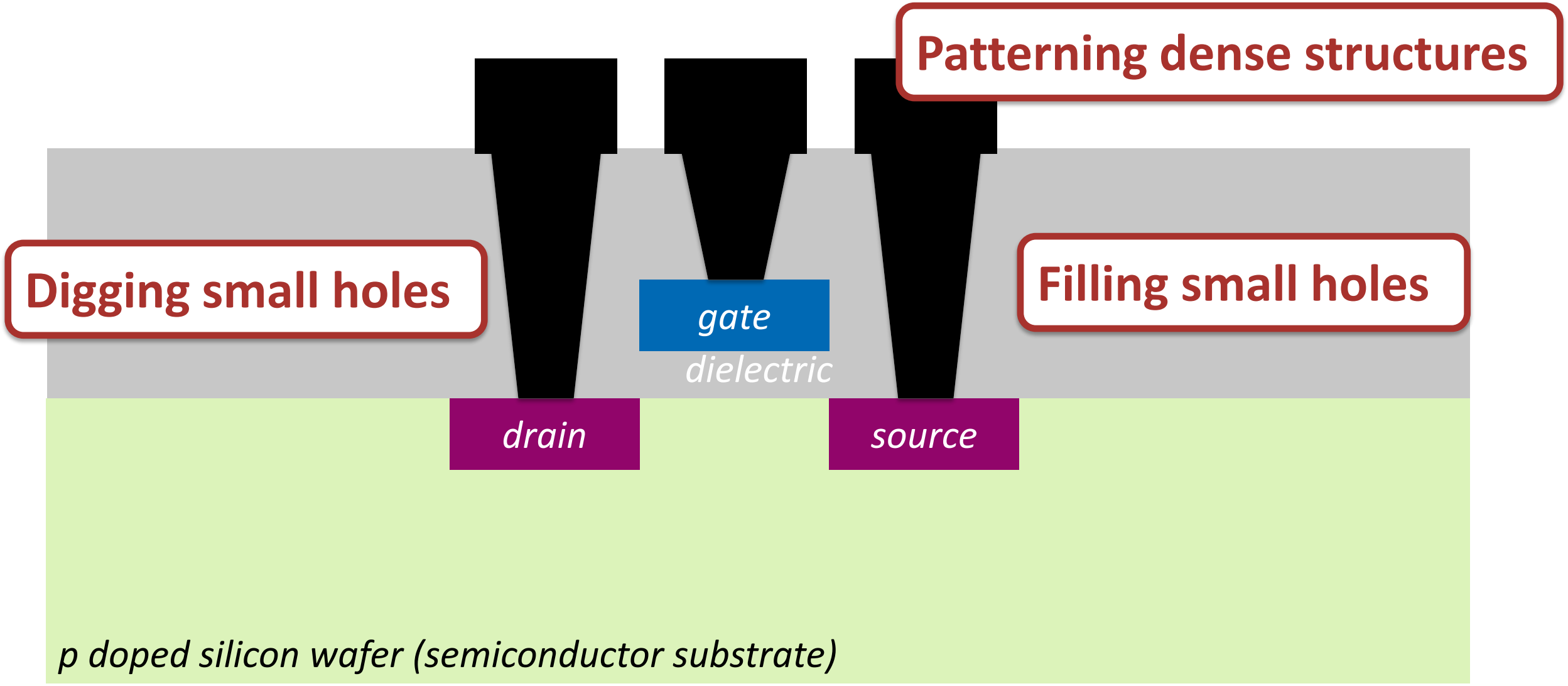

Finding compatible materials is an issue!

- **Silicon processing is quite complex**
  - Many layers, many materials, process steps
- **All materials need to be (somewhat) compatible**
  - Stick to each other
  - Have similar thermal expansion co-efficients
  - Be compatible with the other processing steps
  - The processing should not have adverse effects
    - Rely on dangerous materials
    - Spiking, contamination
- **Some choices are due to such considerations**
  - For example Wolfram for contacts/vias

Picture from https://commons.wikimedia.org/wiki/File:Gluehlampe_01_KMJ.png by KMJ

Patterning the surface using lithography

- **The desired pattern on mask**
  - Features 5x-10x larger
  - Etched on a metallic surface
- **Optics used to focus on surface**
  - Size reduced to the actual dimensions
  - Only a fraction of the surface illuminated
- **The wafer is 'stepped'**
  - Moved so that next area can be patterned
  - Can cover the entire wafer

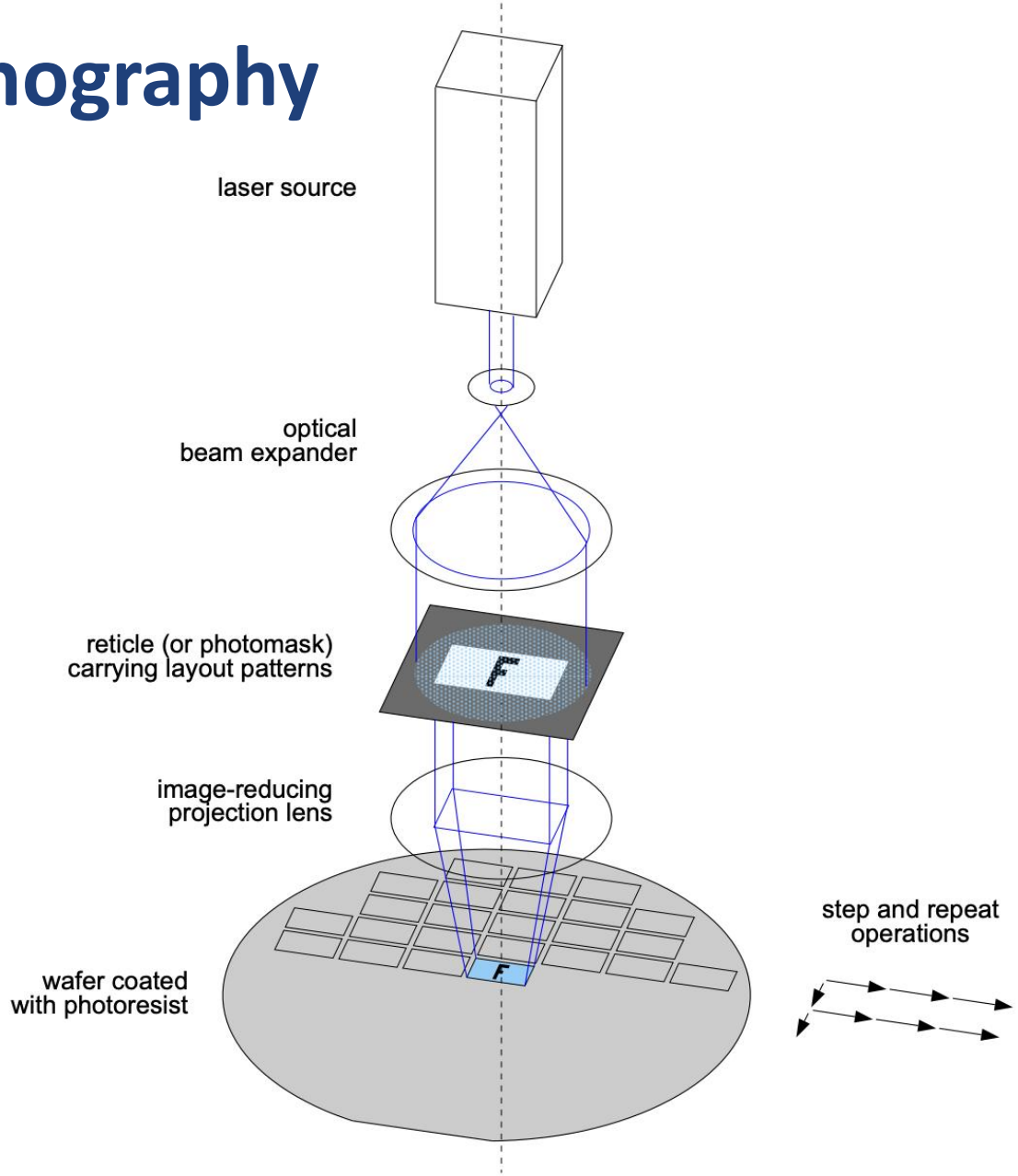

Optics only work up to 193nm

Basic steps of processing: adding photoresist

- **Coat photoresist**
  - Usually organic material
  - Needs to be cured
  - Is sensitive to certain light

Basic steps of processing: exposing patterns

- **Coat photoresist**
- **Illuminate through mask**
  - The pattern of the mask is reflected the on surface
  - Exposed resist changes property

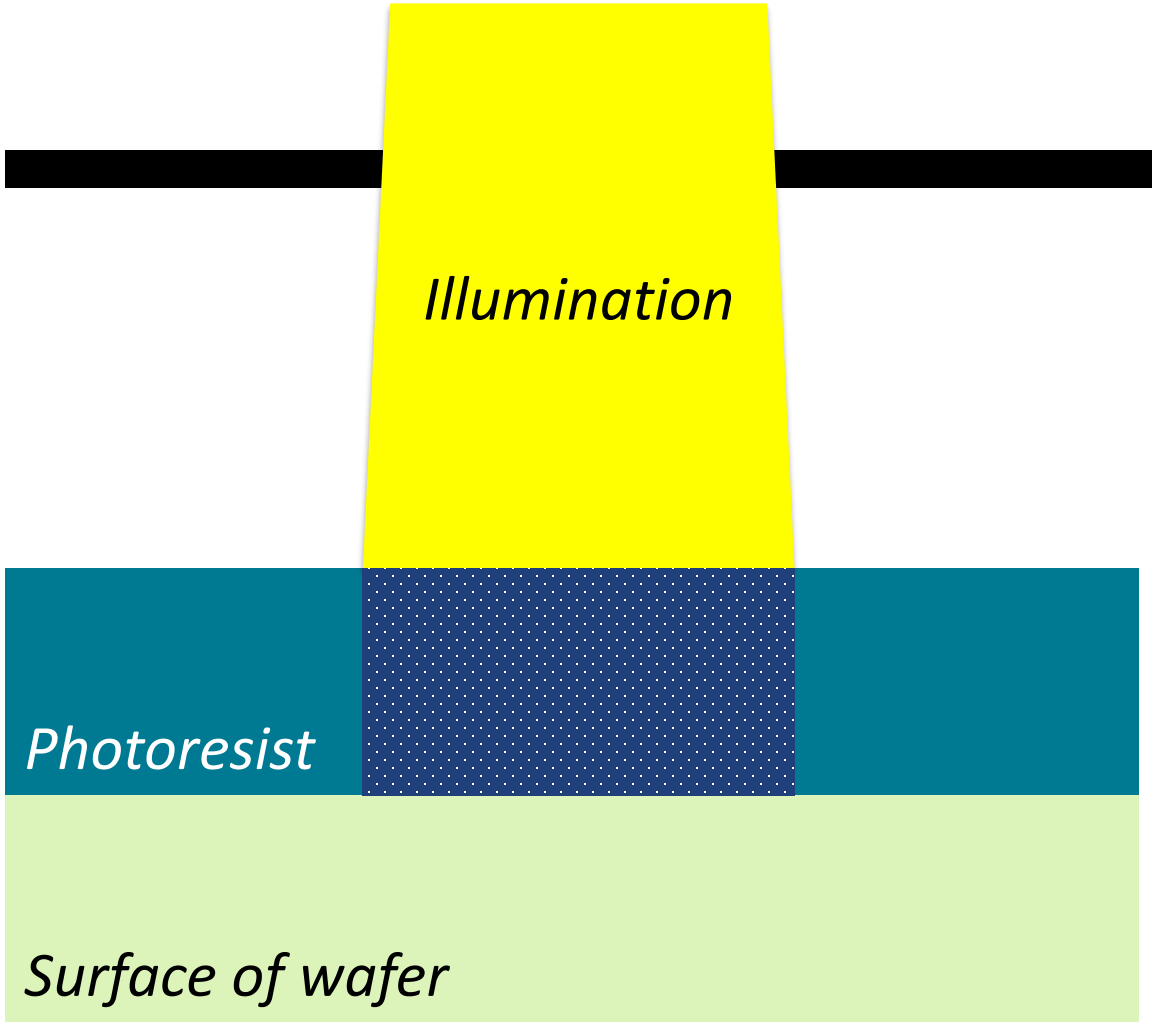

Basic steps of processing: developing photoresist

- **Coat photoresist**
- **Illuminate through mask**
- **Develop photoresist**
  - Cure resist so that it can be removed/kept through solvent
  - Remove cured (positive) part or non-cured (negative) part

Basic steps of processing, manufacturing

- **Coat photoresist**
- **Illuminate through mask**
- **Develop photoresist**
- **Apply manufacturing step**
  - Etching, Deposition, Implantation
  - Photoresist will protect surface
  - Exposed area will get processed

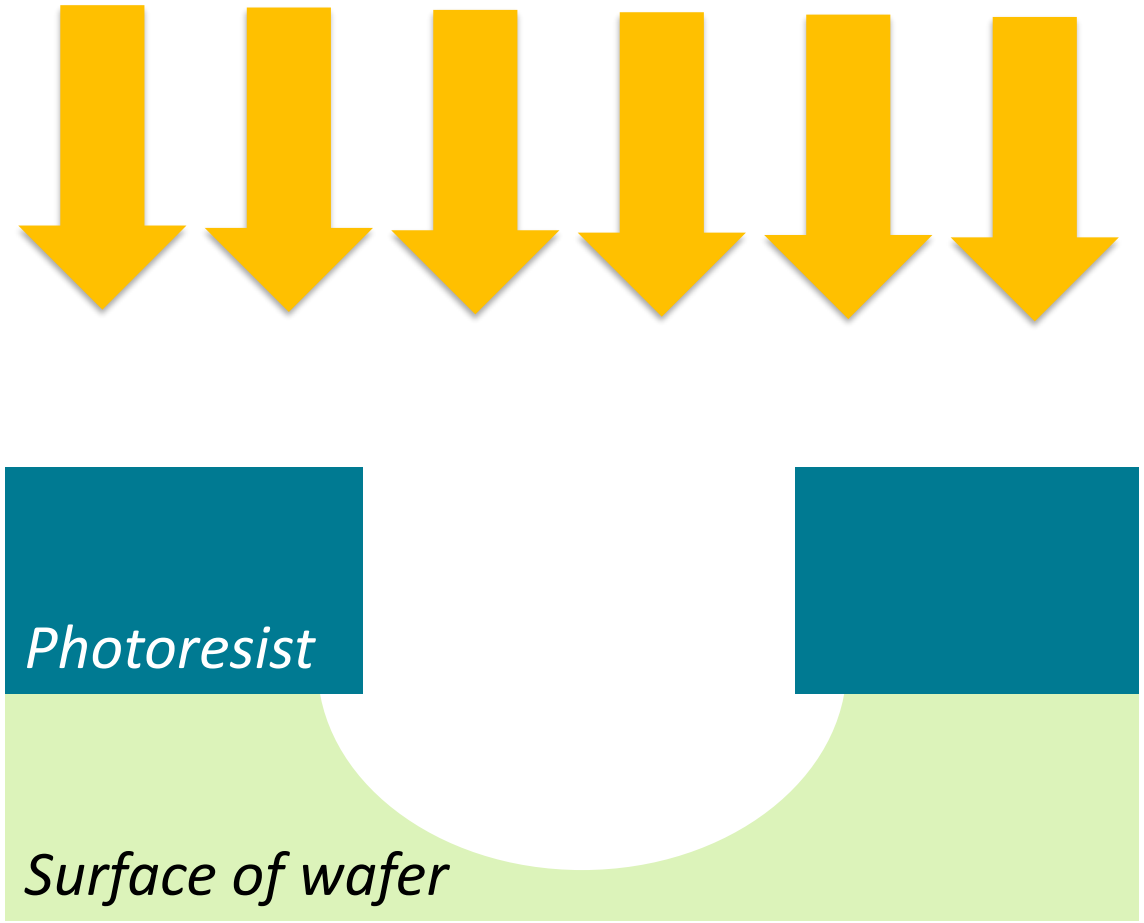

Basic steps of processing, next steps

- **Coat photoresist**
- **Illuminate through mask**
- **Develop photoresist**
- **Apply manufacturing step**
- **Remove resist**
  - Organic material, can be dissolved
  - Washed and cleaned

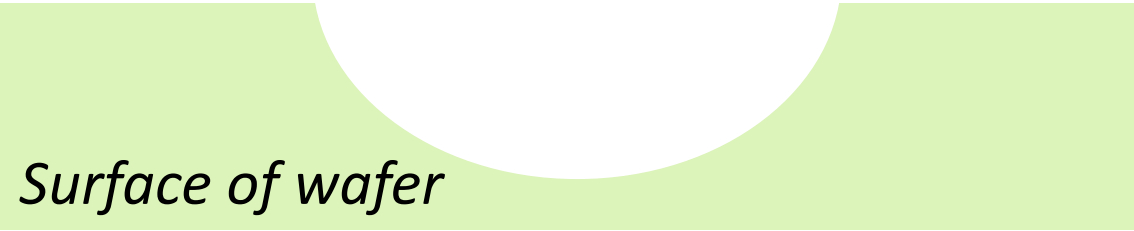

Basic steps of processing, next steps

- **Coat photoresist**
- **Illuminate through mask**
- **Develop photoresist**
- **Apply manufacturing step**
- **Remove resist**
- **Rinse and repeat**
  - Process will take 100 of steps
  - 10s of masks

Align next mask to the same position

Surface is straight enough to pattern

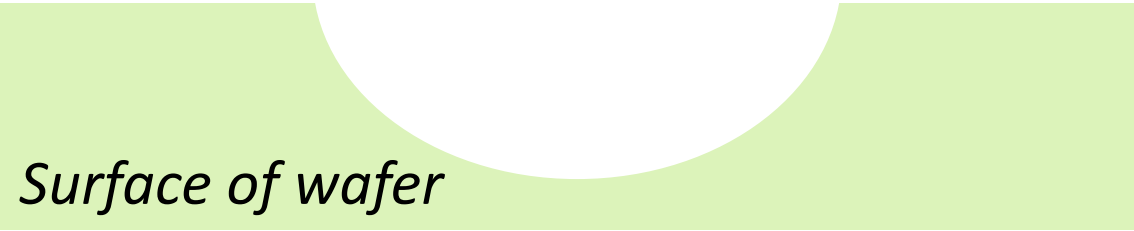

Masks a summary

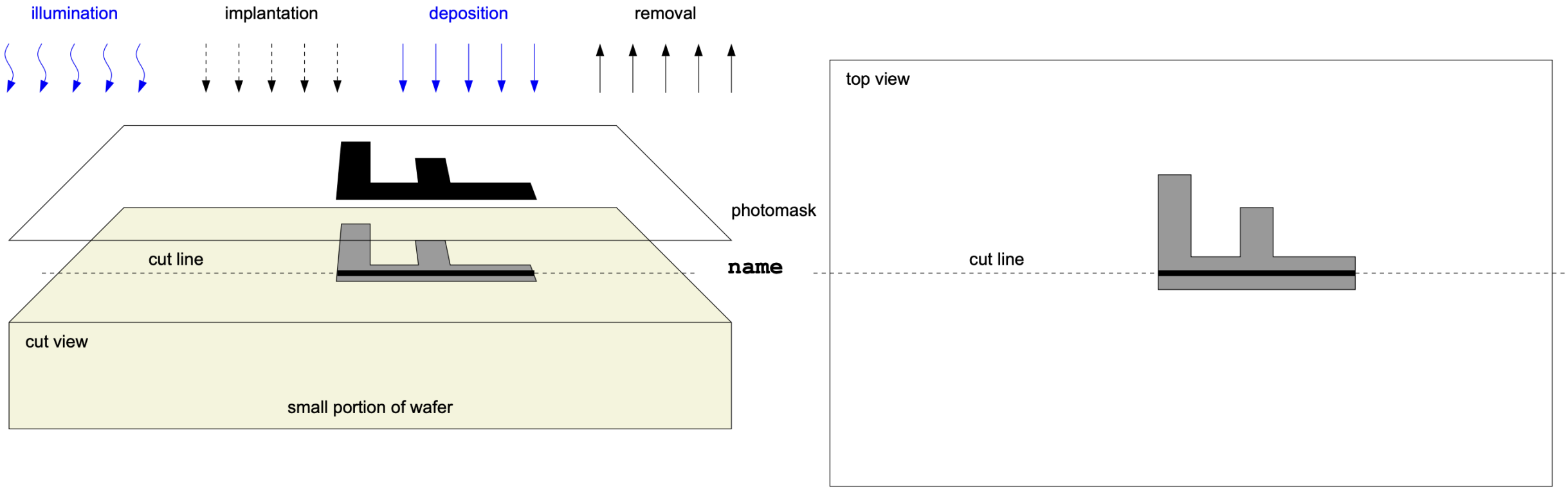

Slide adapted from Hubert Kaeslin, "Top-Down Digital VLSI Design Vol2: From Gate-Level Circuits to CMOS Fabrication"

The big innovation nMOS + pMOS == CMOS

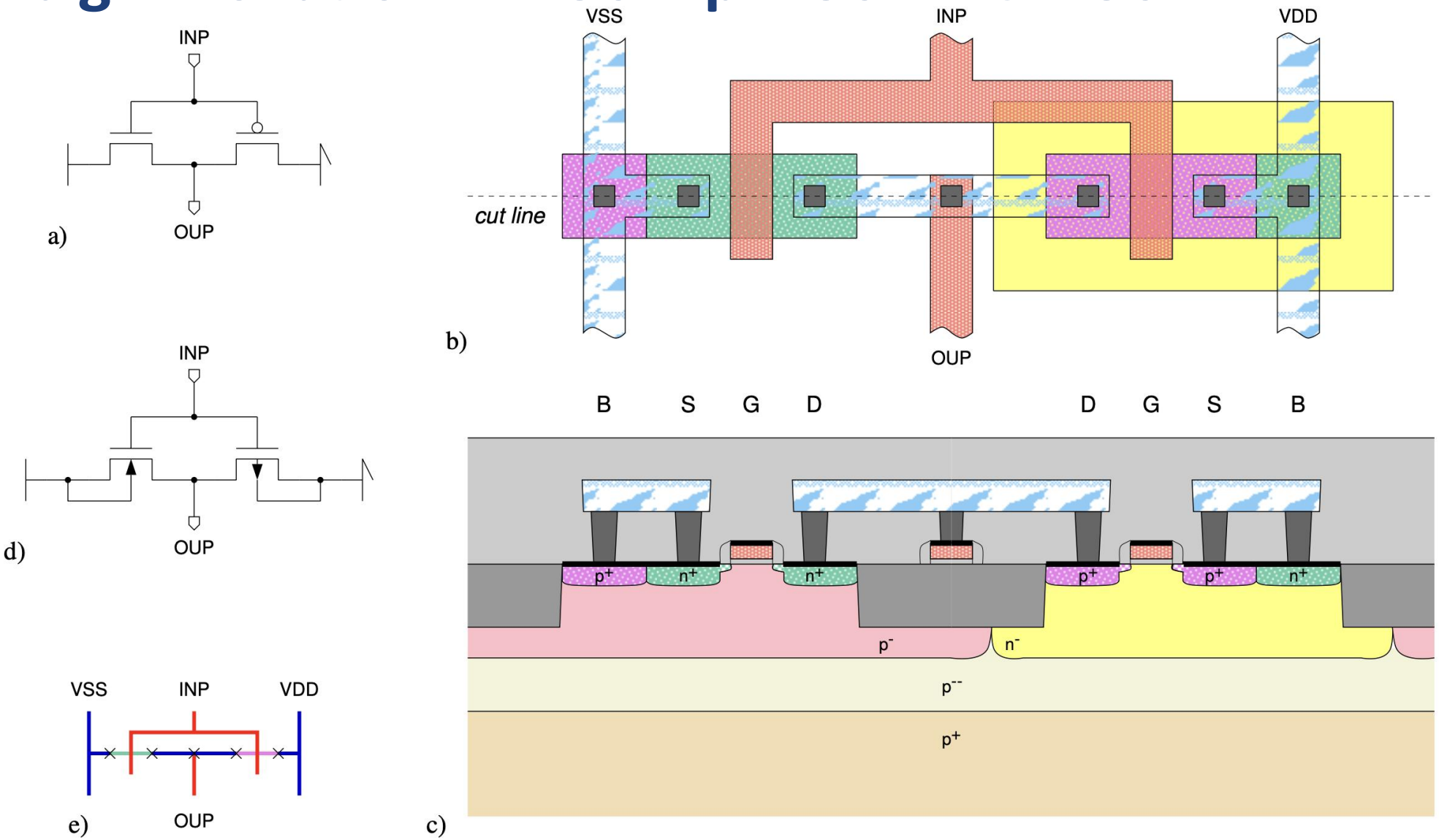

Slide adapted from Hubert Kaeslin, "Top-Down Digital VLSI Design Vol2: From Gate-Level Circuits to CMOS Fabrication"

Logical vs Physical masks

- **We draw masks for regions**
  - Gate
  - Active
  - N-Well etc
- **During manufacturing some can be derived from others**
  - Physical masks are manufactured
  - Same mask can be used for different steps
  - Saves costs

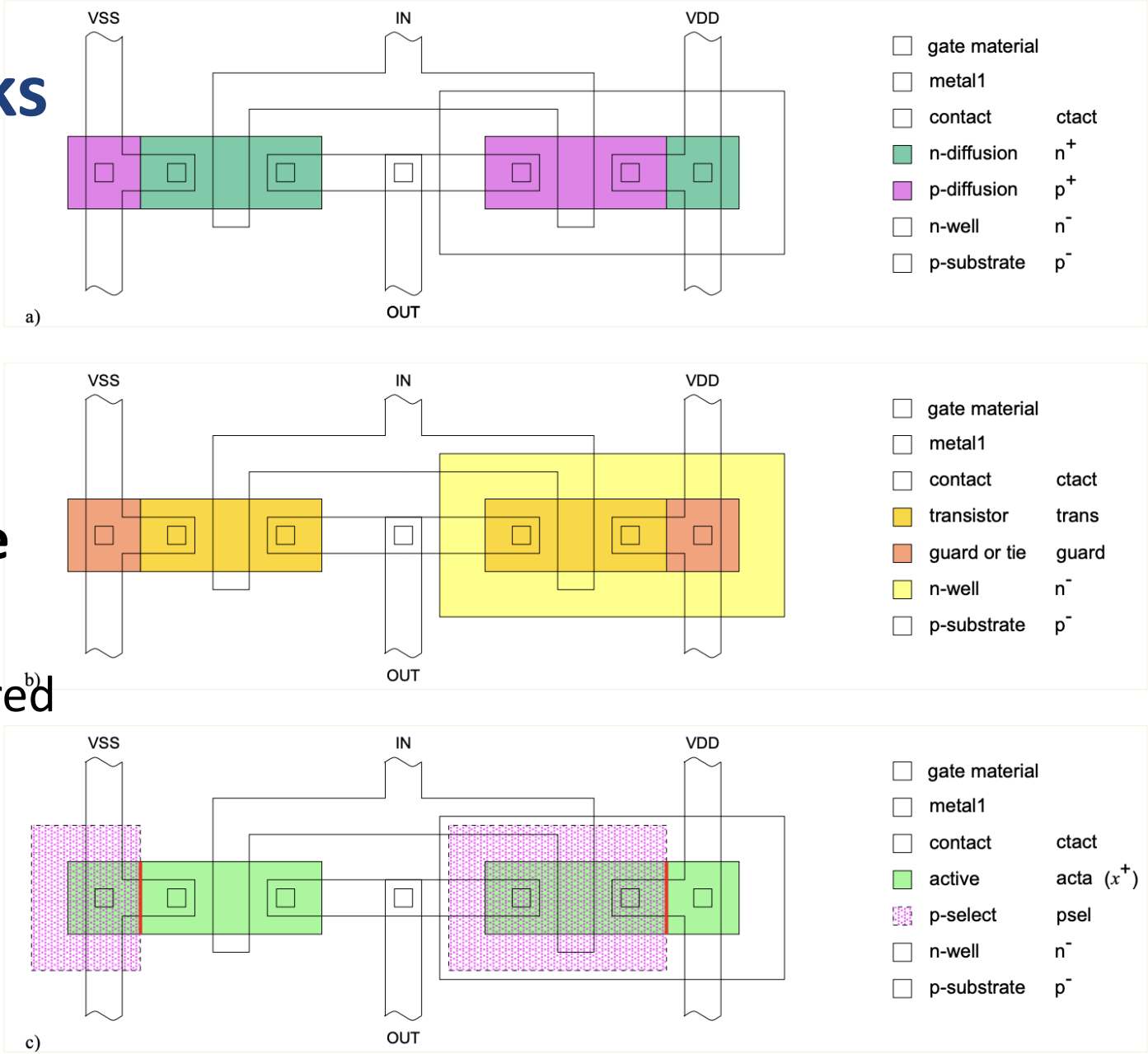

Slide adapted from Hubert Kaeslin, "Top-Down Digital VLSI Design Vol2: From Gate-Level Circuits to CMOS Fabrication"

Step by step (on the blackboard, simplified)

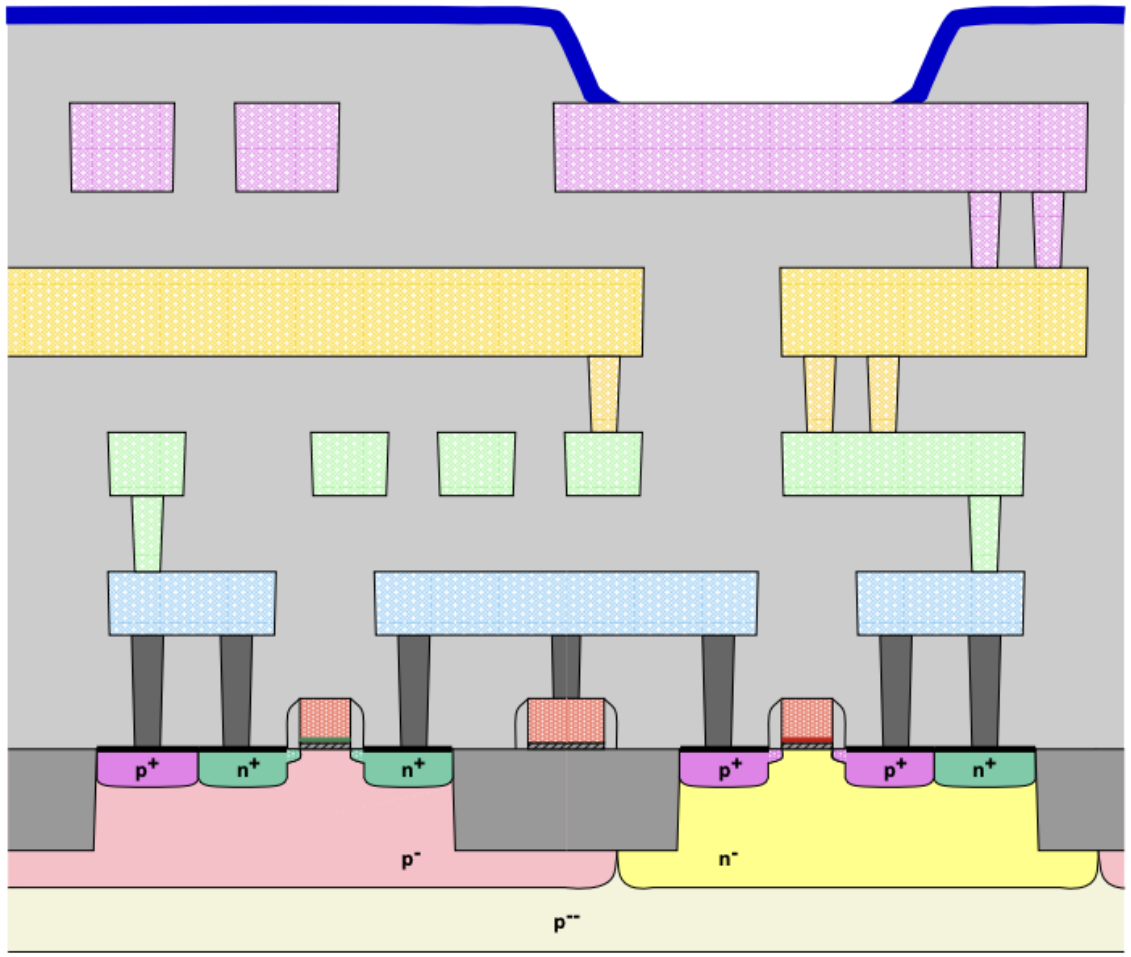

top metal
metal3
metal2
metal1
via cut
contact plug
gate metal
sacrificial poly

n-diffusion n^+
p-diffusion p^+
n-FET
p-FET
work function metal
n-well n^-
p-well p^-
p-substrate p^{--}

n-SDE n^-
p-SDE p^-
final passivation
silicide or salicide
interlevel dielectric
gate dielectric
shallow trench isolation oxide

Slide adapted from Hubert Kaeslin, "Top-Down Digital VLSI Design Vol2: From Gate-Level Circuits to CMOS Fabrication"

Forming the wells

Slide adapted from Hubert Kaeslin, "Top-Down Digital VLSI Design Vol2: From Gate-Level Circuits to CMOS Fabrication"

Active areas

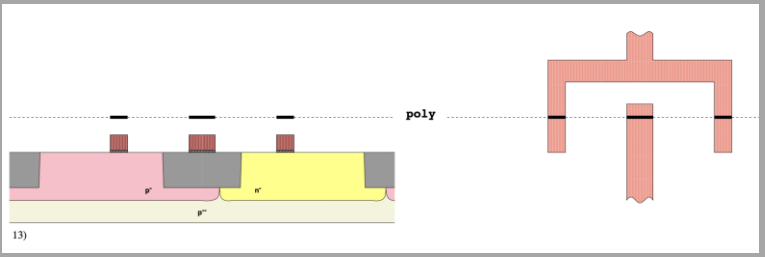

Slide adapted from Hubert Kaeslin, "Top-Down Digital VLSI Design Vol2: From Gate-Level Circuits to CMOS Fabrication"

Transistors

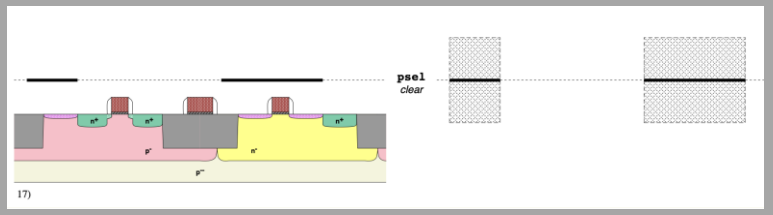

Slide adapted from Hubert Kaeslin, "Top-Down Digital VLSI Design Vol2: From Gate-Level Circuits to CMOS Fabrication"

Contacts

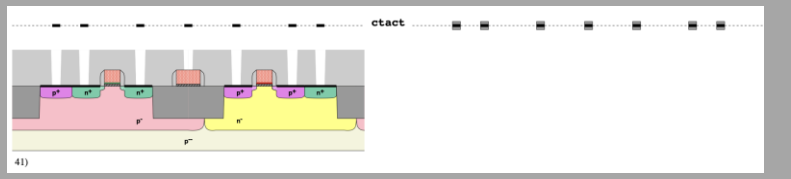

Slide adapted from Hubert Kaeslin, "Top-Down Digital VLSI Design Vol2: From Gate-Level Circuits to CMOS Fabrication"

Metal1

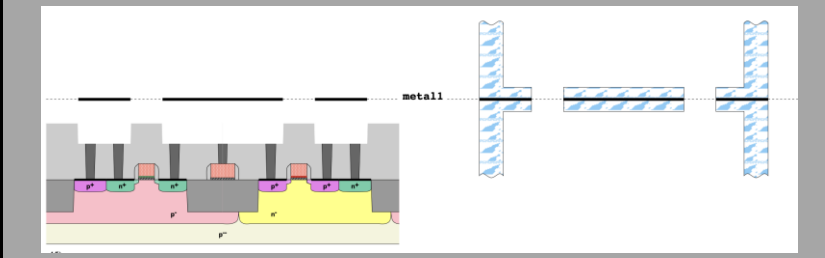

Slide adapted from Hubert Kaeslin, "Top-Down Digital VLSI Design Vol2: From Gate-Level Circuits to CMOS Fabrication"

Higher metals

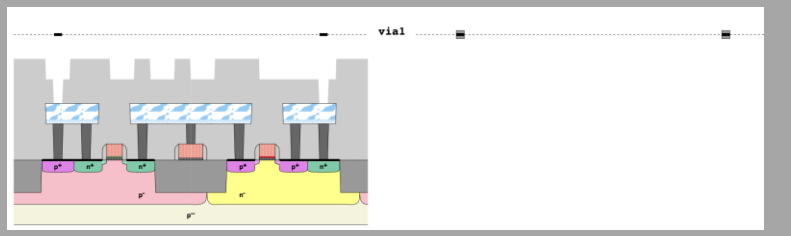

Slide adapted from Hubert Kaeslin, "Top-Down Digital VLSI Design Vol2: From Gate-Level Circuits to CMOS Fabrication"

Once again the final state

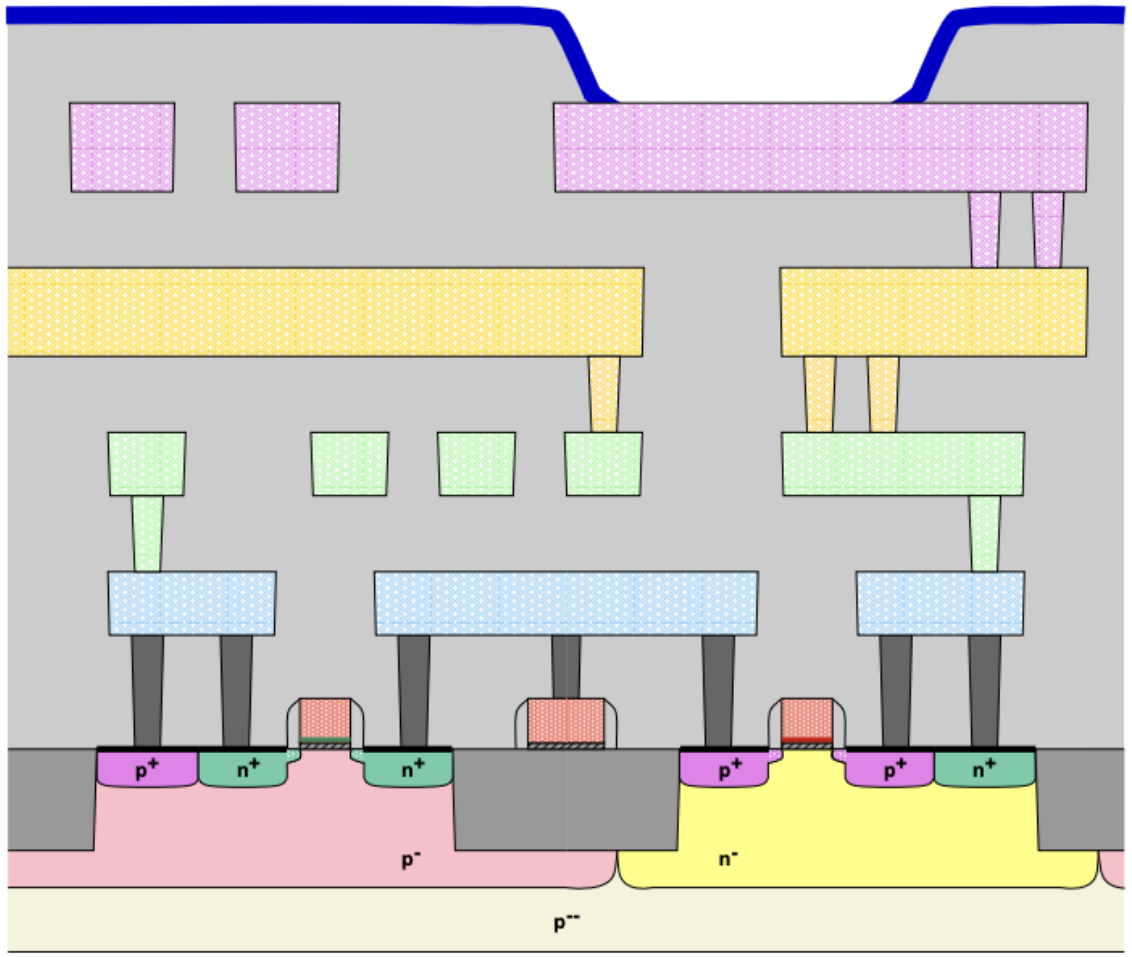

top metal
metal3
metal2
metal1
via cut
contact plug
gate metal
sacrificial poly

n-diffusion n^+
p-diffusion p^+
n-FET
p-FET
work function metal
n-well n^-
p-well p^-
p-substrate p^{--}

n-SDE n^-
p-SDE p^-
final passivation
silicide or salicide
interlevel dielectric
gate dielectric
shallow trench isolation oxide

Slide adapted from Hubert Kaeslin, "Top-Down Digital VLSI Design Vol2: From Gate-Level Circuits to CMOS Fabrication"

ICT

Interconnect technology file

The metal stack determines parasitic effects

- **ICT file (or similar) captures the metal stack**
  - Lists which materials are used with their resistivity, permittivity values
  - Includes also height of the materials allows to re-construct the stack
- **Used to construct tables to extract**
  - Resistance of wires and vias/contacts
  - Capacitance between wires
- **Not a common file these days**
  - Modern manufacturing is very complex, multiple smaller layers used
  - Detailed description could reveal technology secrets
  - Companies deliver ‘already extracted tables for RC ’ for parasitics instead

Anatomy of an ICT file

```
// […]
   conductor "Polysilicon" {
        height                  0.600
        thickness               0.15
        resistivity             7
        layer_type              gate
        gate_forming_layer      true
        temp_tc1                0.0029
   }
// […]
   dielectric ”ox1" {
        conformal               FALSE
        height                  0.750
        thickness               0.50
        dielectric_constant     4.1
   }
}
```

Adapted/simplified example

Conformal: follows contours of lower layer

Usually multiple layers for dielectric needed

Quite rare these days

Next steps

- **Exercise: Synthesis**
  - We will make use what we learned last week in the exercise
  - Use Yosys to synthesize Croc into a gate-level netlist

- **Next Lecture: Physical design**
  - Standard cells
  - Memory macros
  - Layers for routing
  - Components and know-how to start building our chip