ETH zürich

Understanding Power in IC Design

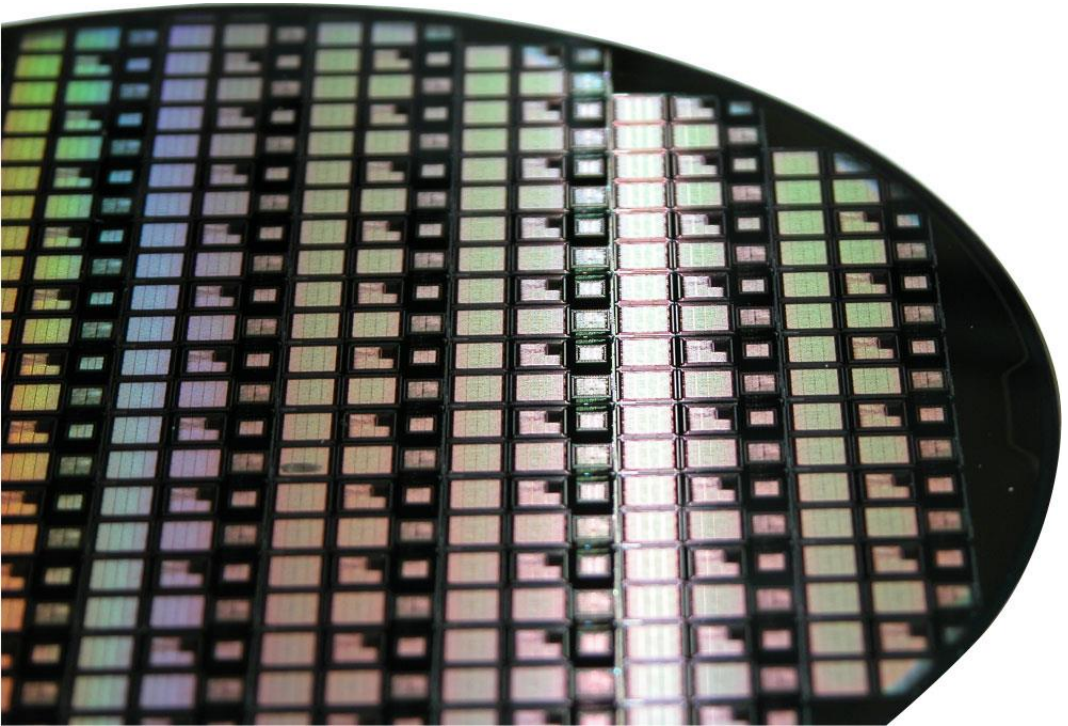

29 April 2025

Luca Benini

Frank K. Gürkaynak

Where are we

Week	Short	Content
1	INTRO	Why this course, design flow, case for an open-source EDA flow
2	RTL	Refresher on System Verilog
3	Netlist	Logic synthesis, basics of digital circuit timing, Croc our example SoC we will use in class
4	ICT	Short summary of IC manufacturing
5	LEF	Standard cells, routing layers
6	DEF	Floorplanning, I/O rings, ESD structures, packaging
7	LIB	Timing, Clock trees, Process corners
8	SDF	Parasitics, extraction, issues in timing, crosstalk
9	GDS	Placement, routing, chip finishing, DRC and LVS
10	**VCD**	**Power analysis and IR Drop**
11	Project	Discussion on your final project, Q&A session
12	WGL	IC Testing, ATPG, JTAG, BIST
13	PPA	Properly reporting performance, power, area in IC Design
14	Final	Final thoughts, reserve

We are nearing the end of our journey

- **Started with a refresher on front-end design**
  - Discussed standard cells and digital design flow
- **Floorplan determines the area of our IC**
  - Reserve place for I/Os, macro cells and standard cells
  - The need for I/O pads, ESD protection, packaging
- **Introduction to timing**
  - Clock distribution, clock disciplines, process corners
  - Parasitics and all other issues that add to our problems
- **Discussed placement and routing algorithms**
  - And steps needed to finish the design

Goals for this lecture

- **Understanding power consumption and energy efficieny**
  - Why it is so important
- **Dynamic and static power components**
  - Understanding how they contribute will help us save power
- **How to estimate power properly**
  - Properly determining activity
- **How to improve energy efficiency in digital circuits**
  - Clock gating, DVFS, power gating
- **The VCD File**

We have reached a point where scaling is power limited

- **1.7x density ↑ but only 27% power ↓ Equi-area chip power 1.24 up!**

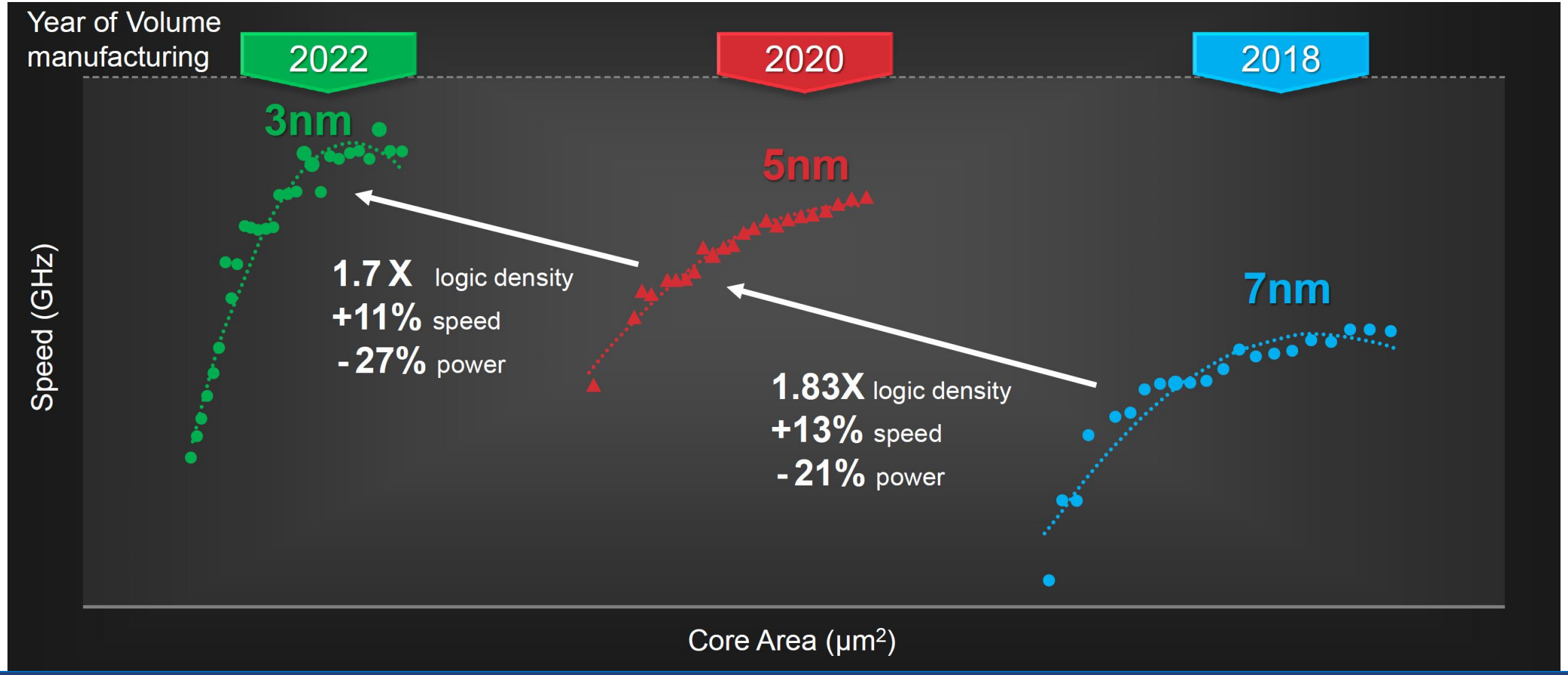

Can also clearly be seen on the processor trend

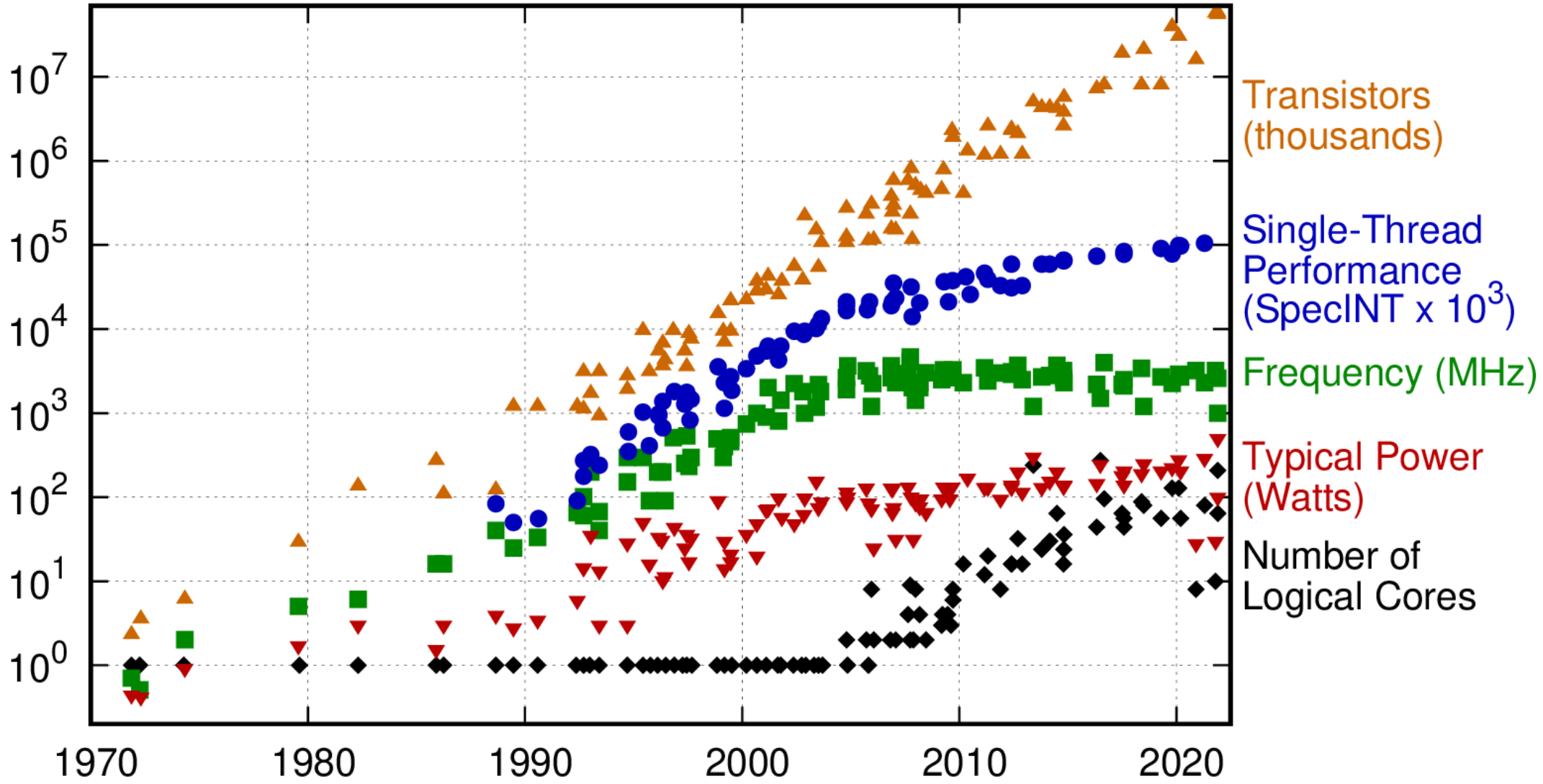

https://github.com/karlrupp/microprocessor-trend-data

First things first: is it power or energy we care about

- **Power is important for**
  - The power distribution, thickness of wires
    - Electromigration
    - IR drop
  - Thermal constraints, cooling needed to keep circuit working
- **Energy is what gets the job done**
  - Power x Time needed to finish a data item, a work load: energy per data item
  - Important for
    - Battery life time
    - Being more efficient
- **We care about both, they are related but not really the same**

But where and how do we dissipate energy?

- **For CMOS circuits we have four main sources of energy dissipation**
  - Charge transfer
  - Short circuit currents
  - Static loads
  - Leakage currents
- **For CMOS circuits**
  - Loads are capacitive (no resistive loads)
  - Signals swing from rail-to-rail (VDD to GND)
  - The only current flow is during transitions
  - Symmetric energy for rising and falling transitions

The charge transfer 0→1 charges, 1→0 discharges load

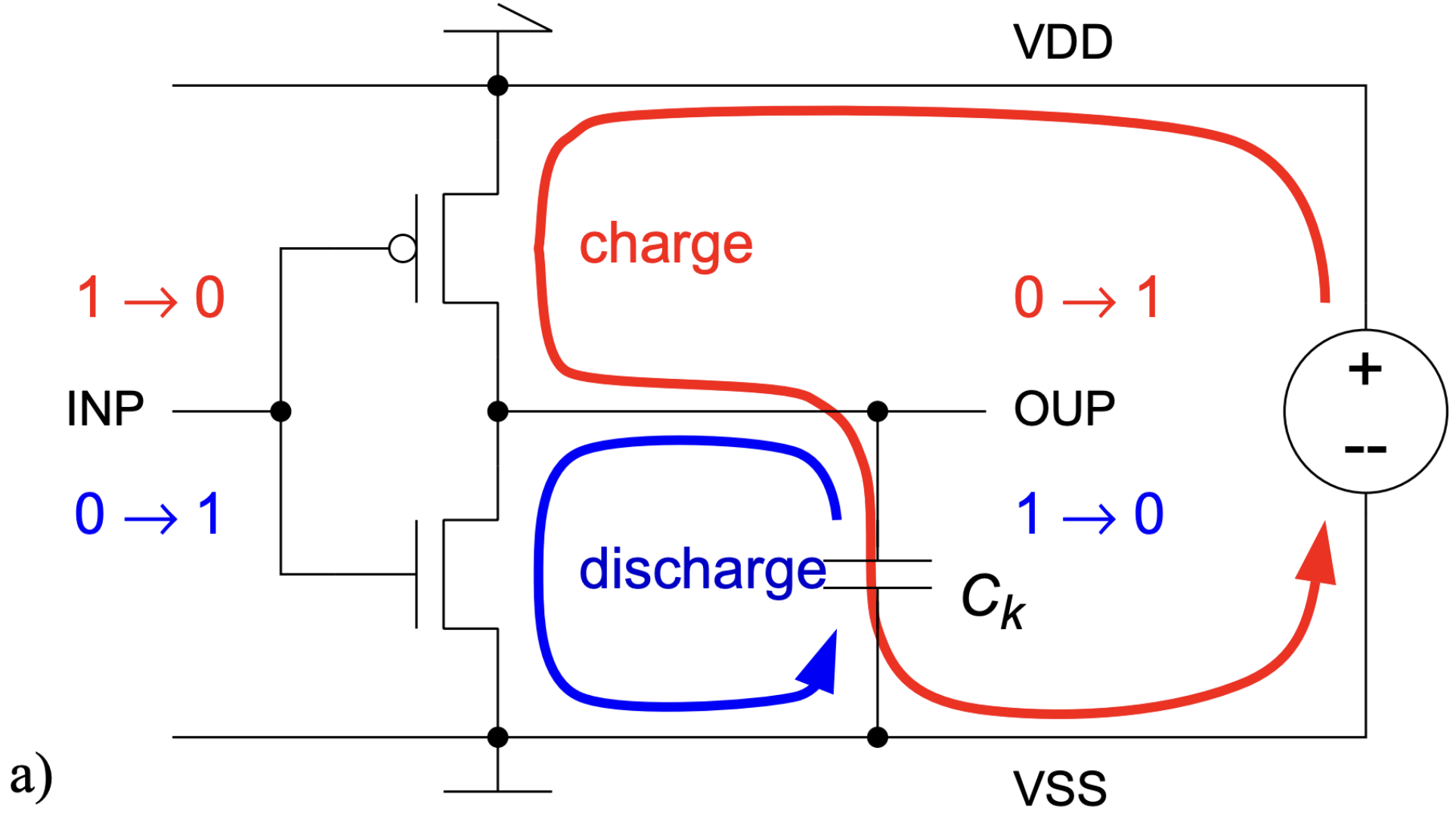

Slide adapted from Hubert Kaeslin, "Top-Down Digital VLSI Design Vol2: From Gate-Level Circuits to CMOS Fabrication"

How much energy is stored in the node capacitance C_k

- **The energy stored in a capacitor C_k at voltage V_{DD}**

$$E_{ck} = 0.5 \cdot C_k \cdot V_{DD}^2$$

- **What happens to this energy stored in the capacitor?**
  - When the capacitance discharges to GND this energy will dissipate as heat
  - The energy when charging will be the same (preservation of energy)
  - So in one cycle (where you charge the capacitance up and down)

$$E_{cycle} = E_{up} + E_{down} = C_k \cdot V_{DD}^2$$

- **C_k consists of both gate and wire capacitances**

Calculating the energy dissipation of a typical circuit

- **In a computation cycle a node is either charged or discharged (= 0.5)**
- **Not every node changes every cycle**
  - α_k is the probability of the node k to change its value

$$E_k = 0.5 \cdot \alpha_k \cdot C_k \cdot V_{DD}^2$$

- **The total energy is the sum over all nodes**

$$E_{ch} = \sum_{k=1}^{K} E_{ch\,k} = U_{dd}^2 \sum_{k=1}^{K} \frac{\alpha_k}{2} C_k$$

- **What values can α_k have?**

Glitches can add to the α_k value and push it higher

- **Back-annotated post-layout simulations needed for getting activity**

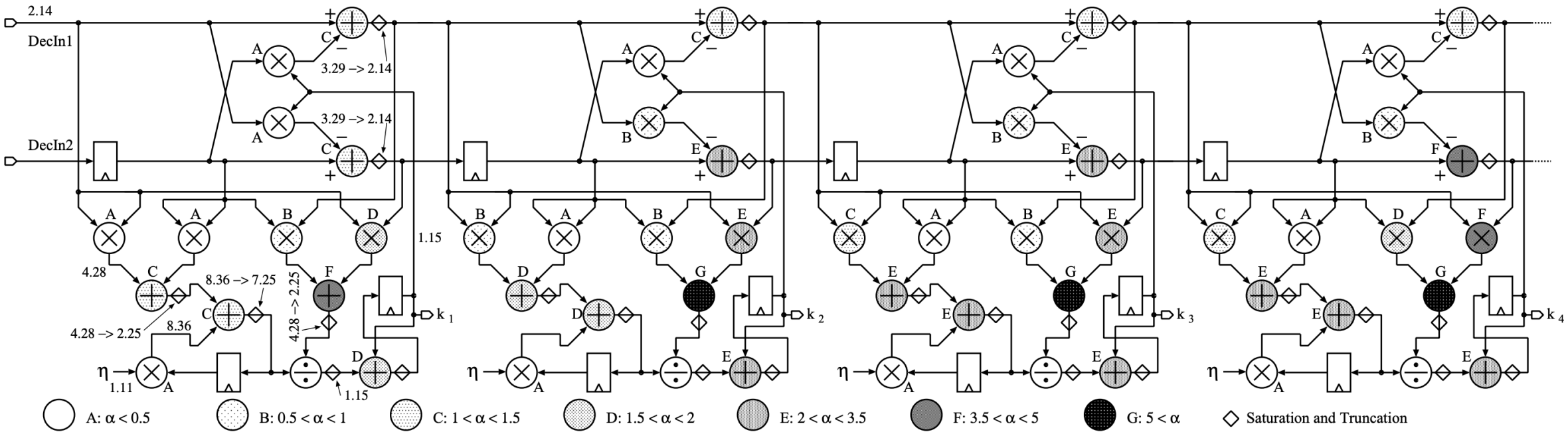

Felix Bürgin, Flavio Carbognani, and Martin Hediger. "Low-Power Architectural Trade Offs in a VLSI Implementation of an Adaptive Hearing Aid Algorithm". In Proceedings of the 43rd Design Automation Conference, San Francisco, CA, July 2006

Node activities are not uniform through the circuit

- **Some nodes have excessive glitching**
  - As discussed for these $\alpha_k > 0.5$
  - Long pipeline stages are usually neeeded
- **Shorter pipeline registers have $\alpha_k = 0.5$**
- **However many nodes have far less activity**

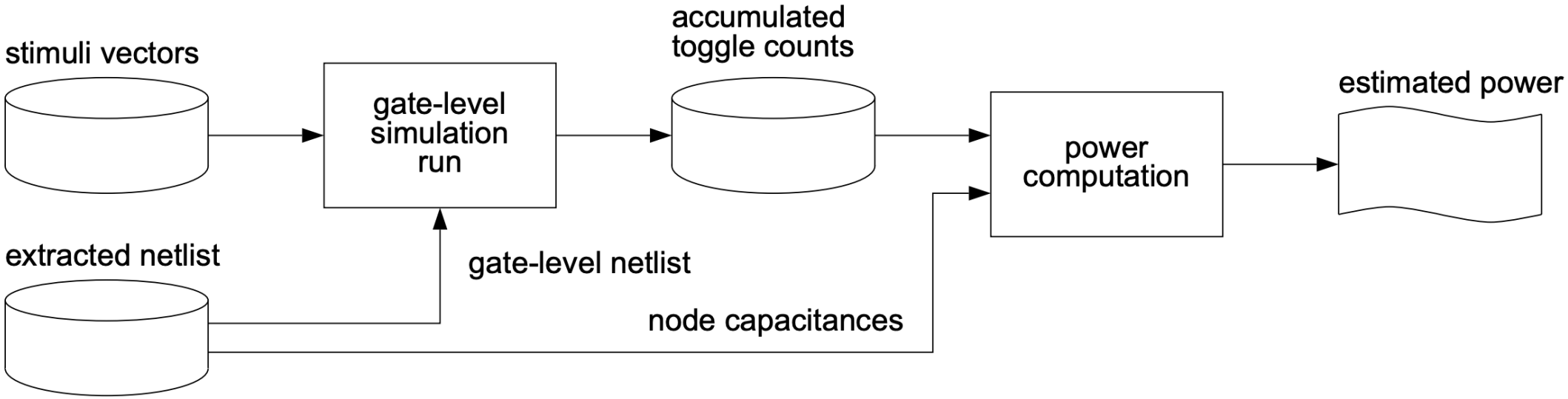

Slide adapted from Hubert Kaeslin, "Top-Down Digital VLSI Design Vol2: From Gate-Level Circuits to CMOS Fabrication"

We will end up charging and discharging many times

- **Remember Power is Energy x Time**
- **If you repeat the same operation f times per second (frequency is f)**
  - The (average) power dissipation will be

$$P_{dyn} = 0.5 \,.\, \alpha \,.\, C \,.\, f \,.\, V_{DD}^2$$

- **This also tells us what to do to save power**
  - Reduce supply voltage
  - Reduce frequency
  - Reduce load capacitance
  - Reduce activity

We will end up charging and discharging many times

- **Remember Power is Energy x Time**
- **If you repeat the same operation f times per second (frequency is f)**
  - The (average) power dissipation will be

$$P_{dyn} = 0.5 \,.\, \alpha \,.\, C \,.\, f \,.\, V_{DD}^2$$

- **This also tells us what to do to save power**
  - Reduce supply voltage (will we be able to do the same work with less V_{DD})
  - Reduce frequency (will we be able to do same job with less cycles)
  - Reduce load capacitance (why was there more load capacitance to start with)
  - Reduce activity (what activity we have does not contribute to the result we need)

This part was the useful part of the energy

- **It is the price we pay for charging and discharging the load**
  - This propagates the signals from one level to the other

- **Ideally this is the only energy we want to spend for CMOS circuits**
  - But this is unfortunately not the case
  - We will have:
    - Short circuit currents
    - Static loads
    - Leakage currents

Short-circuit currents

- **Remember the CMOS inverter (as a representative CMOS gate)**

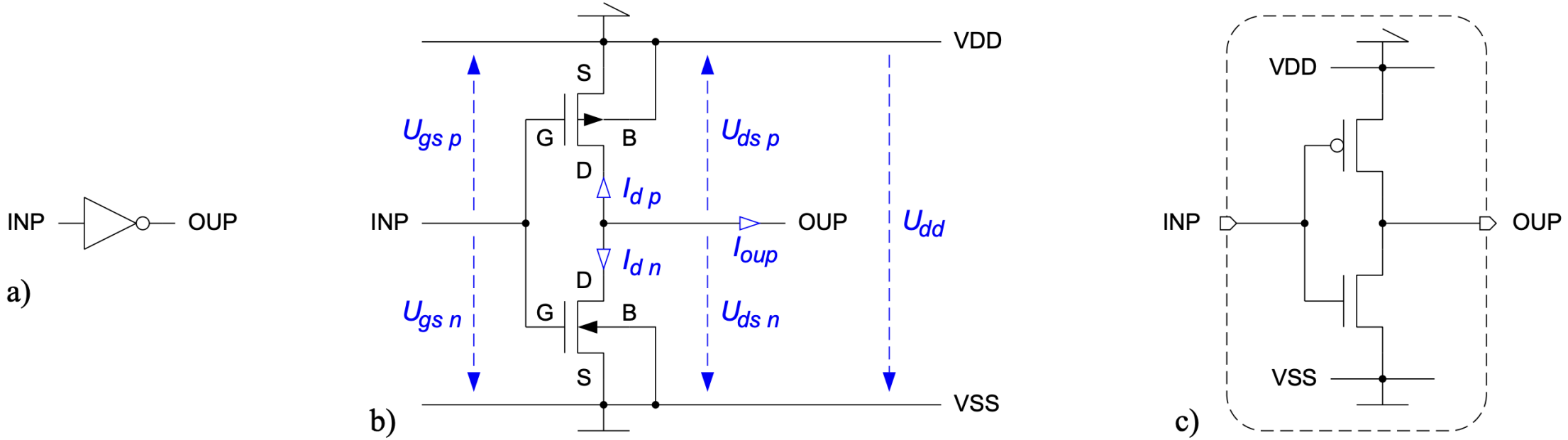

- **At rest, when output is stable at VDD or GND**
  - Either nMOS (when output is at VDD) or pMOS (when output is at GND) is off
  - No direct current path exists between VDD and GND

Slide adapted from Hubert Kaeslin, "Top-Down Digital VLSI Design Vol2: From Gate-Level Circuits to CMOS Fabrication"

Short-circuit currents

- **While the gate switches for a while both transistors are on**

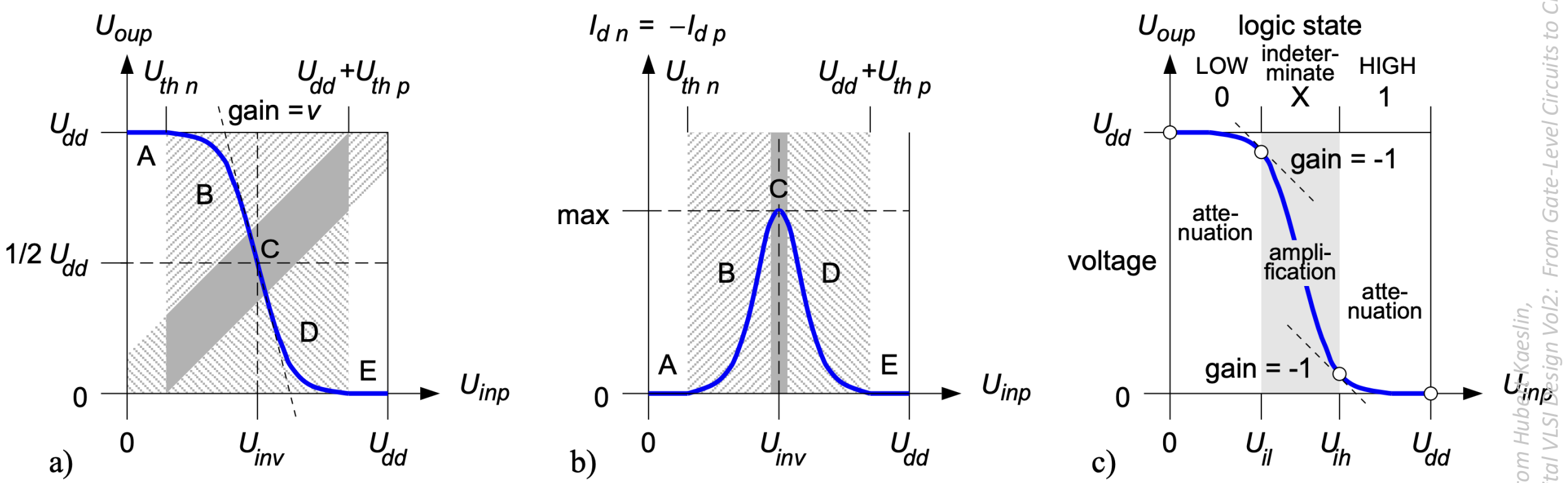

- **This creates a short circuit path from VDD to GND**
  - This current is not helping us with our output

Slide adapted from Hubert Kaeslin, "Top-Down Digital VLSI Design Vol2: From Gate-Level Circuits to CMOS Fabrication"

Short-circuit currents

Under several assumptions you can approximate the energy spent:

$$E_{cr\,cyc\,k} = \frac{\beta}{12}\left(U_{dd} - 2U_{th}\right)^3 t_{ra\,k}$$

where β is the MOSFET gain factor

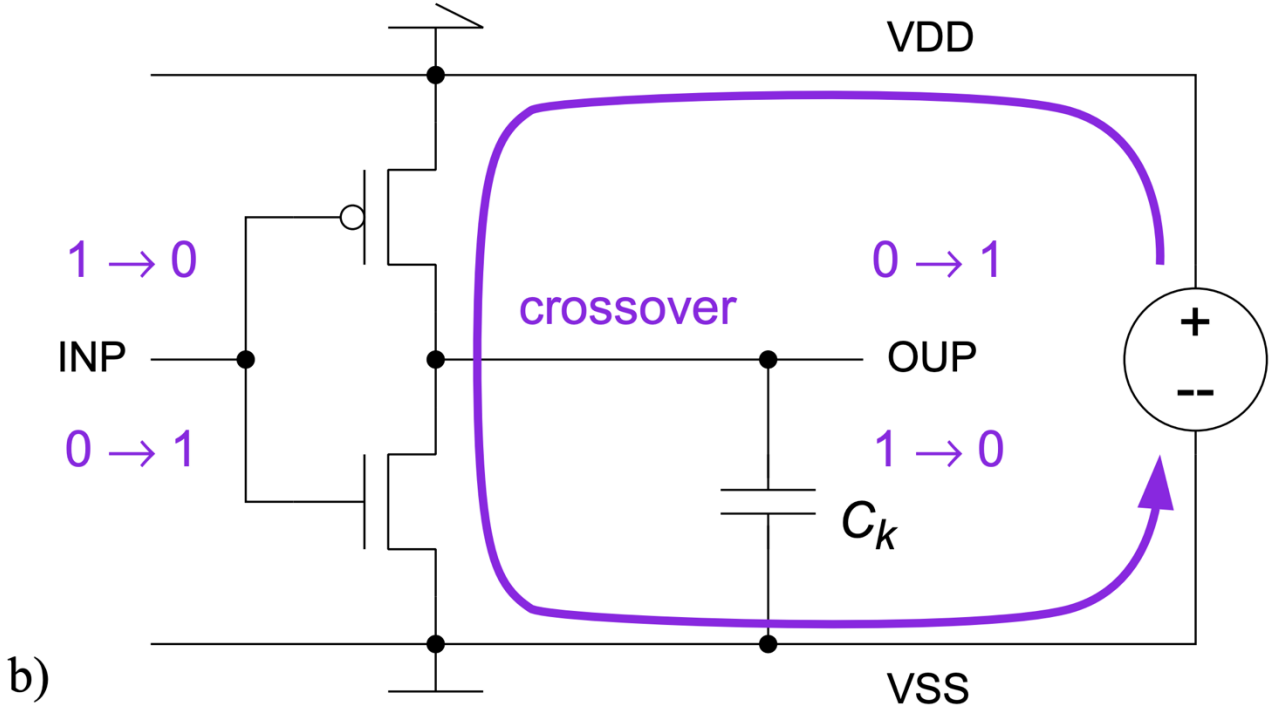

Slide adapted from Hubert Kaeslin, "Top-Down Digital VLSI Design Vol2: From Gate-Level Circuits to CMOS Fabrication"

Short circuit currents are rarely modelled separately

- **Most library vendors use a single power/frequency measure**
  - This figures usually do not differentiate between charge transfer and short-circuit
  - Obtained through circuit simulation by observing total current
    - Does not differentiate between the current that charges and the current that short-circuits
  - Be careful when interpreting power numbers
- **Main way to keep short-circuit current in check is the transition time**
  - Library usually impose a maximum transition time
  - This shows up as a design rule

Energy dissipated by static loads

- **Prior to CMOS, static loads were quite common**
- **These days they are used by**
  - Alternative logic styles
  - Pull-up pull-down structures
  - Termination resistors
  - Analog circuits

$$E_{rr\,k} = P_{rr\,k}\,T_{cp} = \frac{U_{dd}^2}{R_k}\,\delta_k\,T_{cp}$$

  - δ_k is the duty cycle when load is connected

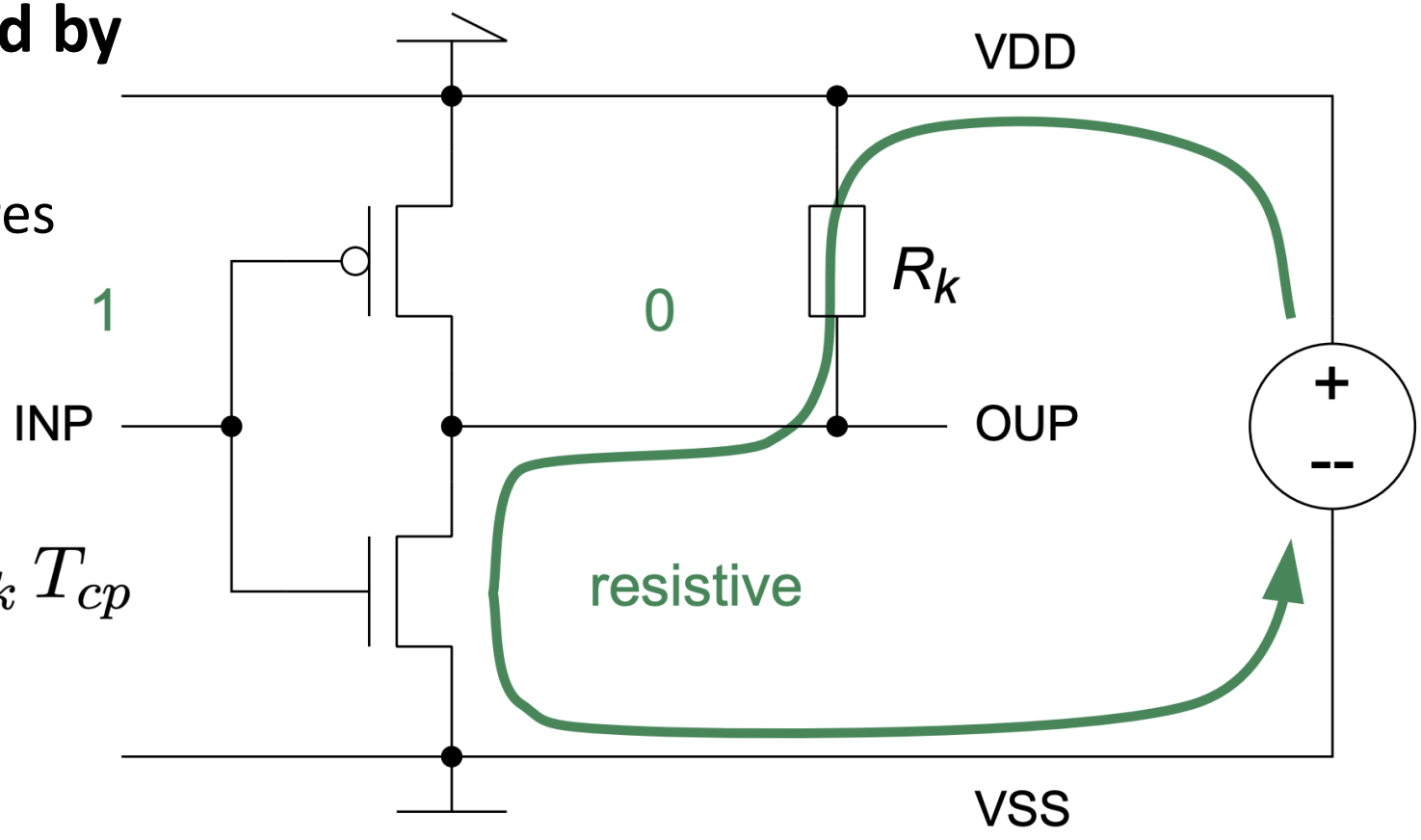

Slide adapted from Hubert Kaeslin, "Top-Down Digital VLSI Design Vol2: From Gate-Level Circuits to CMOS Fabrication"

The big issue: leakage currents

- **In an ideal world there is no leakage**
  - Transistors are ideal switches, when they switch off, no current flows
  - The gate is an ideal capacitor, no current leaks through
  - There are no currents that flow through the substrate
- **But of course we do not live in an ideal world!**
- **There are four main contributors to leakages currents:**
  - Subthreshold conduction in MOSFETs that are turned off $I_{ds\ off}$.
  - Reverse-biased drain-bulk and source-bulk junctions $I_{db\ rev}$.
  - Reverse-biased well-well and/or well-substrate junctions $I_{bb\ rev}$.
  - Electron tunneling through the gate dielectric $I_{g\ tun}$ (aka gate leakage).

Leakage paths in CMOS gates

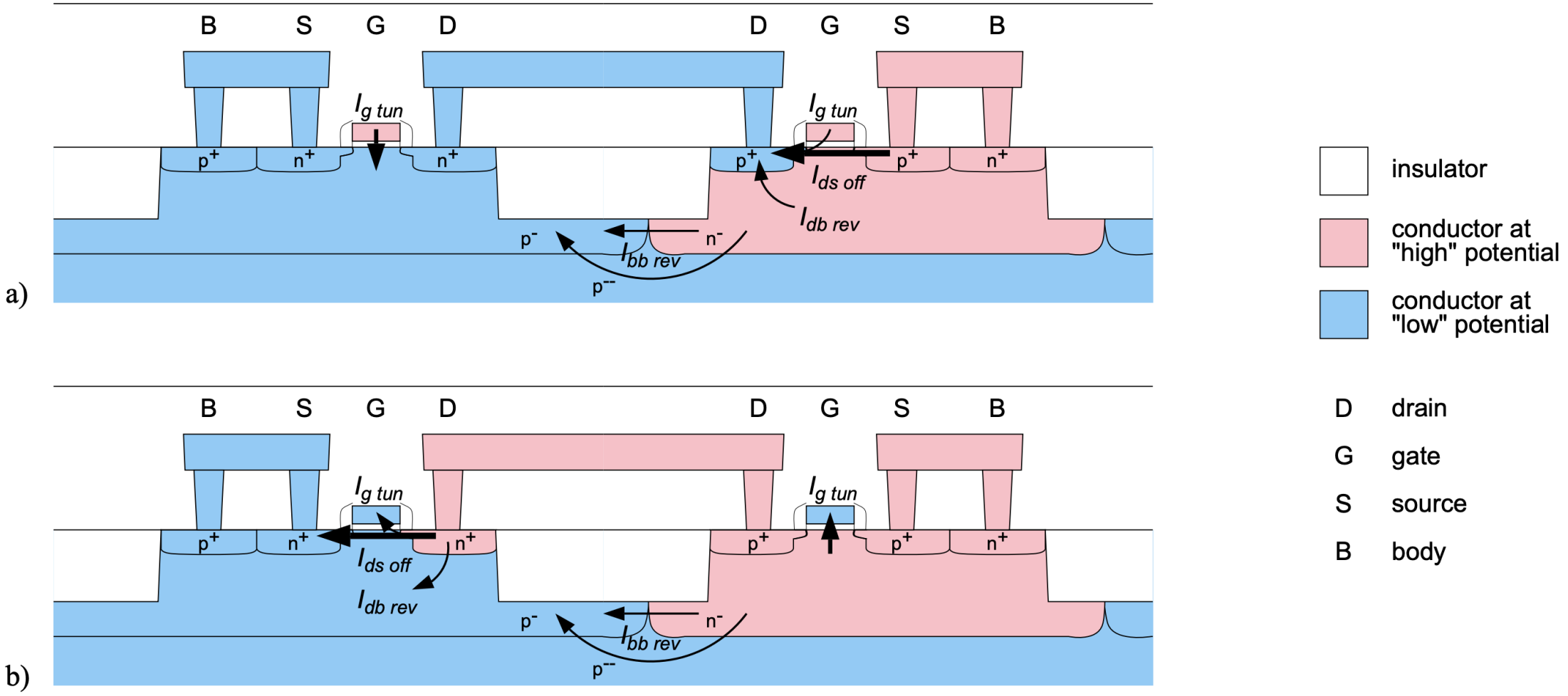

Slide adapted from Hubert Kaeslin, "Top-Down Digital VLSI Design Vol2: From Gate-Level Circuits to CMOS Fabrication"

Leakage current

$$I_{lk} \approx \sum_{g=1}^{G} I_{ds\,off\,g} \approx \frac{\Delta I_{ds\,off}}{\Delta W} \sum_{g=1}^{G} W_g \propto 10^{\frac{U_{gs\,off} - U_{th}}{S}} \sum_{g=1}^{G} W_g$$

where

$\frac{\Delta I_{ds\,off}}{\Delta W}$	MOSFET subthreshold current per unit width
G	number of gates
W_g	transistor width in logic gate g
	(grows with drive strength)
$U_{gs\,off} \equiv 0$	for standard CMOS logic
	(a starting point for countermeasures)
$U_{th} \approx U_{th\,n} \approx -U_{th\,p}$	MOSFET threshold voltage
S	MOSFET subthreshold slope
	(typ. 70...120 mV/decade for bulk CMOS)

Slide adapted from Hubert Kaeslin, "Top-Down Digital VLSI Design Vol2: From Gate-Level Circuits to CMOS Fabrication"

Typical leakage currents

Process generation	Junction temp. θ_j °C	Off-current $\frac{\Delta I_{ds\,off}}{\Delta W}$ n-channel [pA/μm]	p-channel [pA/μm]	Common measurement conditions
250 nm	25	3	−2	$W = 10\ \mu\text{m}$, $L = 240$ nm
	85	88	−35	$U_{ds} = 2.5$ V, $U_{gs} = 0$ V
	125	420	−190	
130 nm[a]	25	18 000	−12 000	$W = 10\ \mu\text{m}$, $L = 130$ nm
	85	89 000	−62 000	$U_{ds} = 1.2$ V, $U_{gs} = 0$ V
	125	103 000	−137 000	
22 nm[b]	27	100 000	−100 000	$L = 30$ nm, $U_{ds} = 0.75$ V

Notice the temperature dependence of leakage current

Slide adapted from Hubert Kaeslin, "Top-Down Digital VLSI Design Vol2: From Gate-Level Circuits to CMOS Fabrication"

Why is leakage such a big issue

- **We are putting more and more transistors on a chip**
  - Even if one transistor leaks only a little, 1 billion of them leak a lot
  - 1pA x 1’000’000’000 = 1mA
- **Leakage depends exponentially on the threshold voltage**
  - We have been lowering the threshold voltage continuously
    - For faster switching on
    - Also to account for reduction of supply voltage to cope with thinner oxides.
- **Leakage has a strong temperature dependence**
  - 10x – 100x over 100°C

Leakage current does not do any useful work for us!

Total energy

- **Let's sum these up**

$$E_{cp} = \sum_{k=1}^{K} \left(E_{ch\,k} + E_{cr\,k} + E_{rr\,k} \right) + E_{lk}$$

- **Approximately**

$$\approx U_{dd}^2 (1+\sigma) \sum_{k=1}^{K} \frac{\alpha_k}{2} C_k + T_{cp} \left(U_{dd}^2 \sum_{k=1}^{K} \frac{\delta_k}{R_k} + U_{dd} \frac{\Delta I_{ds\,off}}{\Delta W} \sum_{g=1}^{G} W_g \right)$$

- **Static loads and leakage currents contribute for the duration of T_{cp}**

Slide adapted from Hubert Kaeslin,"Top-Down Digital VLSI Design Vol2: From Gate-Level Circuits to CMOS Fabrication"

Total energy: V_{DD} is the most dominant part

- **Let's sum these up**

$$E_{cp} = \sum_{k=1}^{K} (E_{ch\,k} + E_{cr\,k} + E_{rr\,k}) + E_{lk}$$

- **Approximately**

$$\approx U_{dd}^2 (1+\sigma) \sum_{k=1}^{K} \frac{\alpha_k}{2} C_k + T_{cp} \left(U_{dd}^2 \sum_{k=1}^{K} \frac{\delta_k}{R_k} + U_{dd} \frac{\Delta I_{ds\,off}}{\Delta W} \sum_{g=1}^{G} W_g \right)$$

Slide adapted from Hubert Kaeslin,"Top-Down Digital VLSI Design Vol2: From Gate-Level Circuits to CMOS Fabrication"

Moving on to power (because we also care about power)

Careful: Power is not influenced by how much work you do!
Energy is still the one you should care more!

$$P_{total} = I_{static} \cdot V_{DD} + 0.5 \cdot \alpha \cdot f \cdot C \cdot V_{DD}^2$$

- **Where:**
  - $\mathbf{I_{static}}$ is the sum of all current that flows at rest
  - $\boldsymbol{\alpha}$ is the activity of the circuit: depends on what the circuit is doing
  - **f** is the clock frequency
  - **C** are the node capacitances that are being charged (i.e. the netlist)
  - $\mathbf{V_{DD}}$ supply voltage

Reduction of Energy/Power also depends on these

$$P_{total} = I_{static} \cdot V_{DD} \quad + 0.5 \cdot \alpha \cdot f \cdot C \cdot V_{DD}^2$$

- **Where:**
  - $\mathbf{I_{static}}$ reduce leakage current
  - $\boldsymbol{\alpha}$ reduce activity
  - **f** reduce clock rate
  - **C** reduce number of switched gates
  - $\mathbf{V_{DD}}$ reduce supply voltage

If only these were independent

Not very straightforward

The only real way to reduce energy/power is to eliminate waste

$$P_{total} = I_{static} \cdot V_{DD} \quad + 0.5 \cdot \alpha \cdot f \cdot C \cdot V_{DD}^2$$

- **Where:**
  - $\mathbf{I_{static}}$ We need to have the transistors, we want them to work fast, so they leak
  - $\boldsymbol{\alpha}$ The chip has to do some activity
  - **f** The clock rate is there so that we get some performance
  - **C** We need to have the functionality, so we need these gates
  - $\mathbf{V_{DD}}$ Transistors to work at a given speed need at least some V_{DD}

Dynamic frequency scaling – thermal protection

- **Modern chips that have billions of transistors can overheat**
- **The dynamic power consumption might generate too much heat**
- **Simple (and effective) solution**
- **Reduce operating frequency (for parts of) the chip**
  - Remember dynamic power is linearly dependent on the frequency
  - Keep temperature under control when too much activity is there
- **Modern dynamic frequency control systems look for a balance**
  - Systems running critical tasks are given more ‘juice’ to finish their job
  - Other tasks are run on slower cores.
  - All cll phones and modern processors use these tricks

Let's see how much we can reduce V_{DD}

- **The propagation delay (t_{pd}) depends on the overdrive (V_{DD}/V_{th})**

$$t_{pd} \propto \frac{C_k U_{dd}}{(U_{dd} - U_{th})^{\alpha}}$$

- **Here α is the velocity saturation index**
  - Back in the day it used to be 2
  - As transistors got smaller this decreased to 1
- **Basically keep V_{DD} high and V_{th} small to become faster**
  - But with more modern technologies the overdrive ratio (V_{DD}/V_{th}) is less critical

Slide adapted from Hubert Kaeslin, "Top-Down Digital VLSI Design Vol2: From Gate-Level Circuits to CMOS Fabrication"

Plotting overdrive (V_{DD}/V_{th})

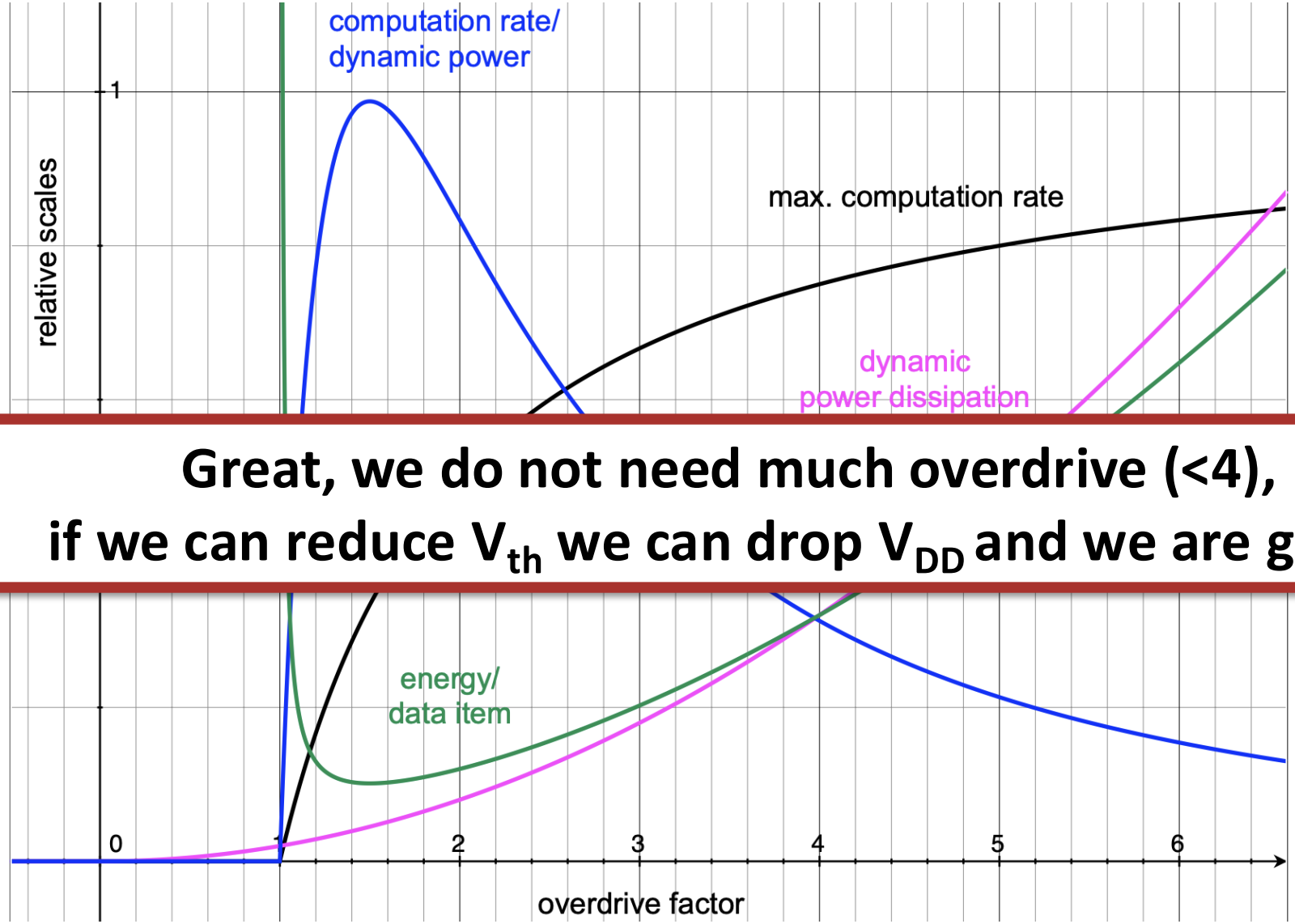

Great, we do not need much overdrive (<4),
if we can reduce V_{th} we can drop V_{DD} and we are good!

Slide adapted from Hubert Kaeslin, "Top-Down Digital VLSI Design Vol2: From Gate-Level Circuits to CMOS Fabrication"

V_{th} is a balance between speed and leakage

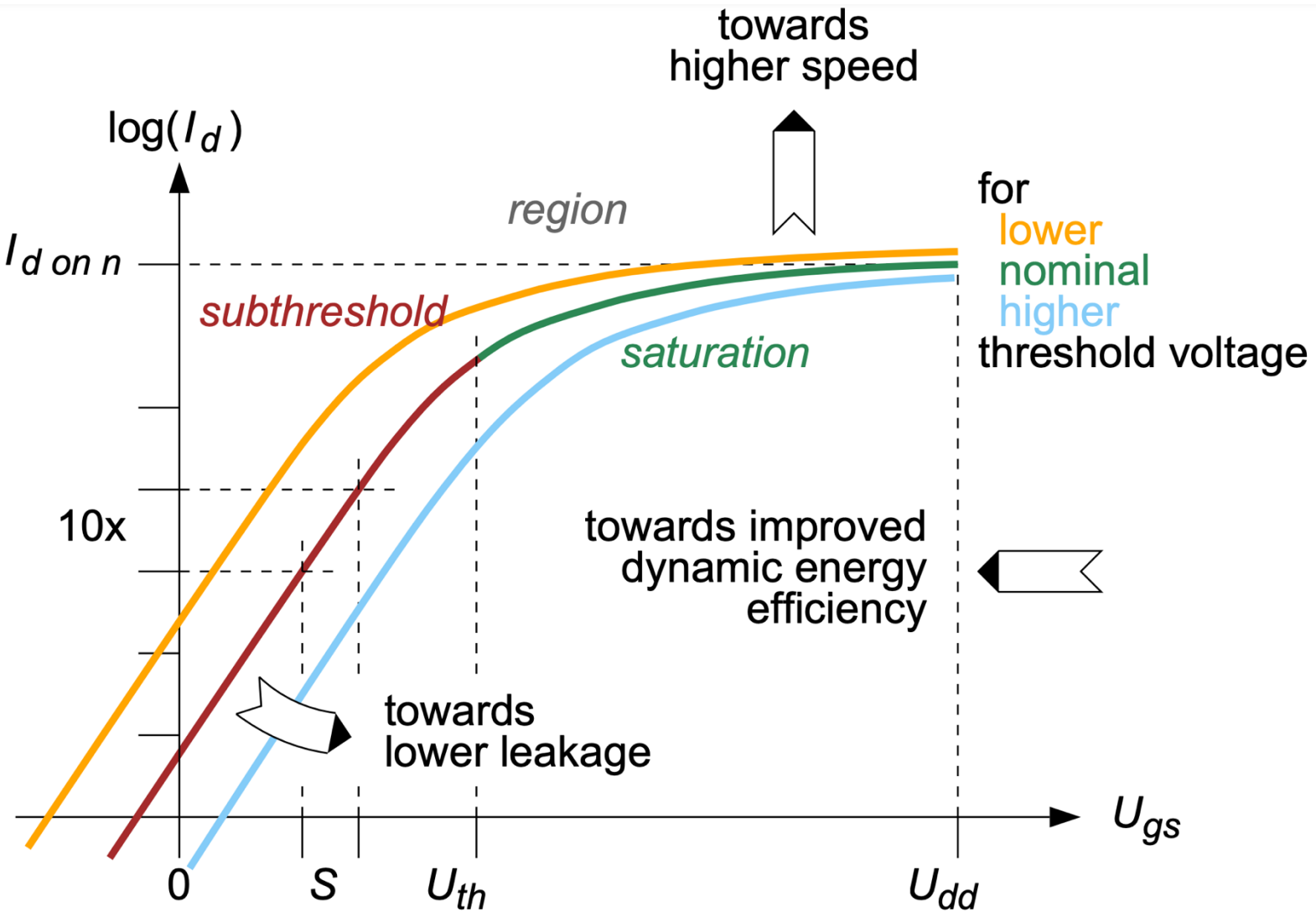

Slide adapted from Hubert Kaeslin, "Top-Down Digital VLSI Design Vol2: From Gate-Level Circuits to CMOS Fabrication"

Development of voltages for processes over the years

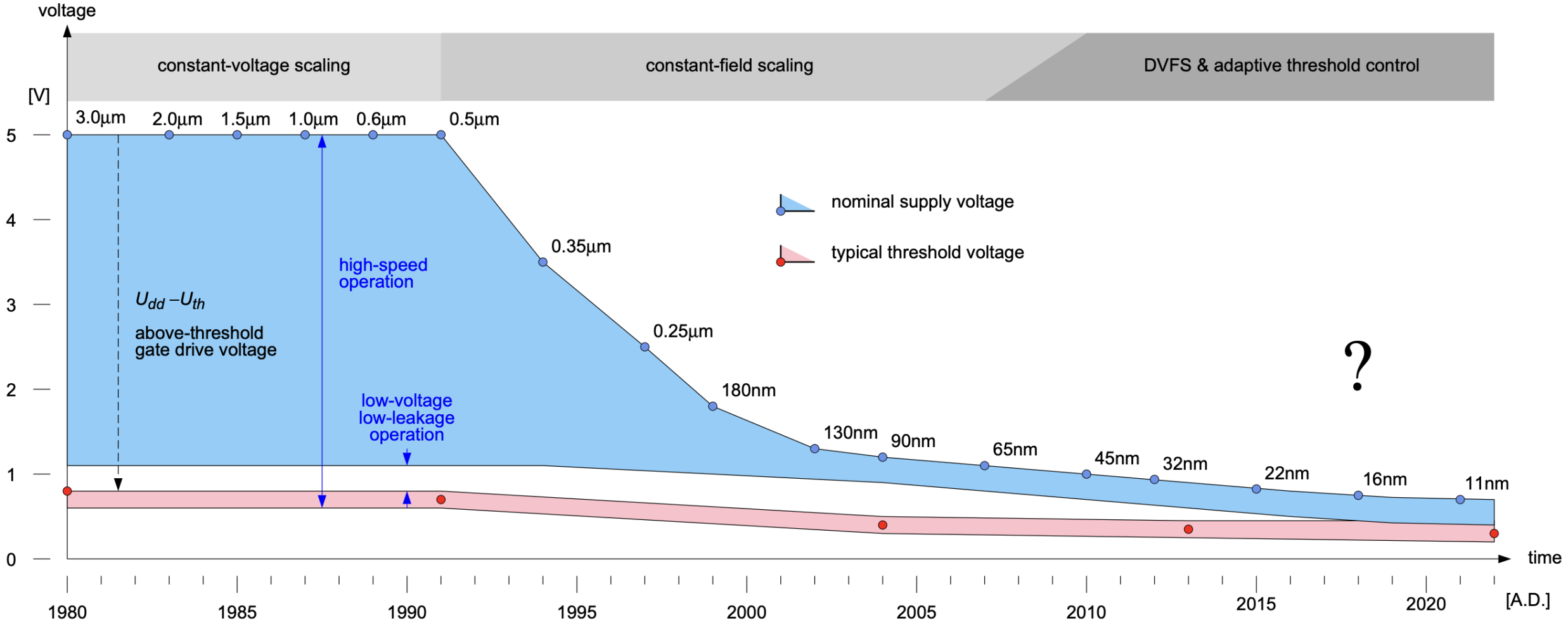

Slide adapted from Hubert Kaeslin,"Top-Down Digital VLSI Design Vol2: From Gate-Level Circuits to CMOS Fabrication"

Is there an optimum point for efficiency

- As VDD decreases, operating speed decreases
- However efficiency increases→ more work done per Joule
- At some point leakage starts to dominate
- Efficiency drops

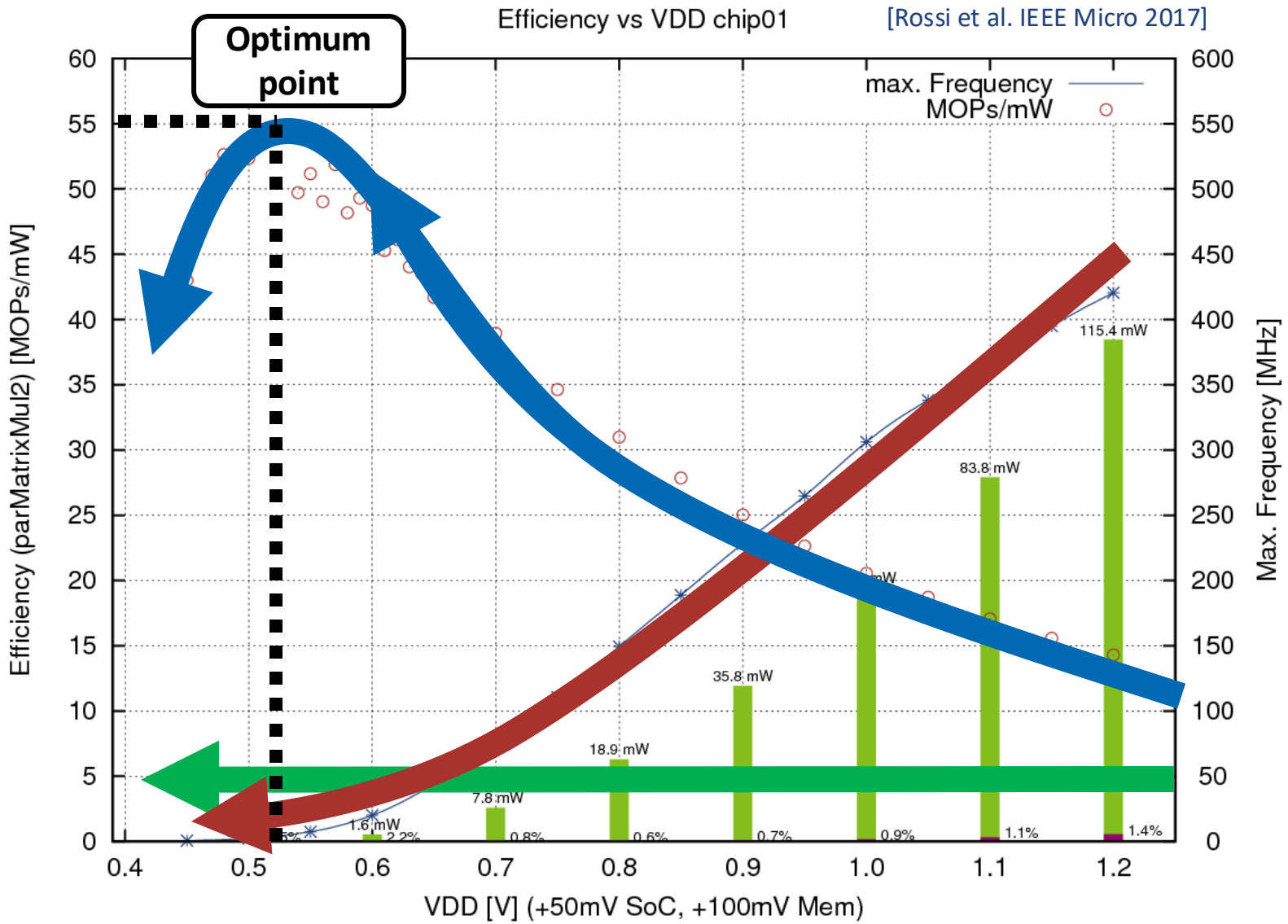

The longer the operation takes, the more we leak!

- **Low-power circuits with low V_{DD} have more issues with leakage**
  - To lower V_{DD} further, V_{th} also has to be lowered, which increases leakage
  - As the V_{DD} is low, the circuit runs slower, operation takes longer
    - More time is spent leaking
- **High-performance circuits have also issues**
  - Transistors with lower V_{th} are faster, but leak more
  - Architectural transforms for performance also increase number of transistors
- **Best would be**
  - Run fast, run parallel and switch off once you are done
  - Of course it would be boring if this was so easy

Tricks being played around V_{th}

- **Modern technologies (65nm and newer) have different V_{th} options**
  - Some have 3 or even up to 6 different V_{th} options
    - Super Low VT (SLVT), Low VT (LVT), Regular VT (RVT), High VT (HVT), Ultra High VT (UHVT)..
  - Standard cell libraries have VT variations
    - Tools, users can choose the VT option that is needed (fast or low leakage)
    - In most cases, different VT standard cells can be mixed and matched.
- **Body-biasing can individually tune the transistors dynamically**
  - Reverse body biasing: increases effective threshold (less leakage)
  - Forward body biasing: reduces effective threshold (faster transistors)

Using Forward Body Bias for more performance

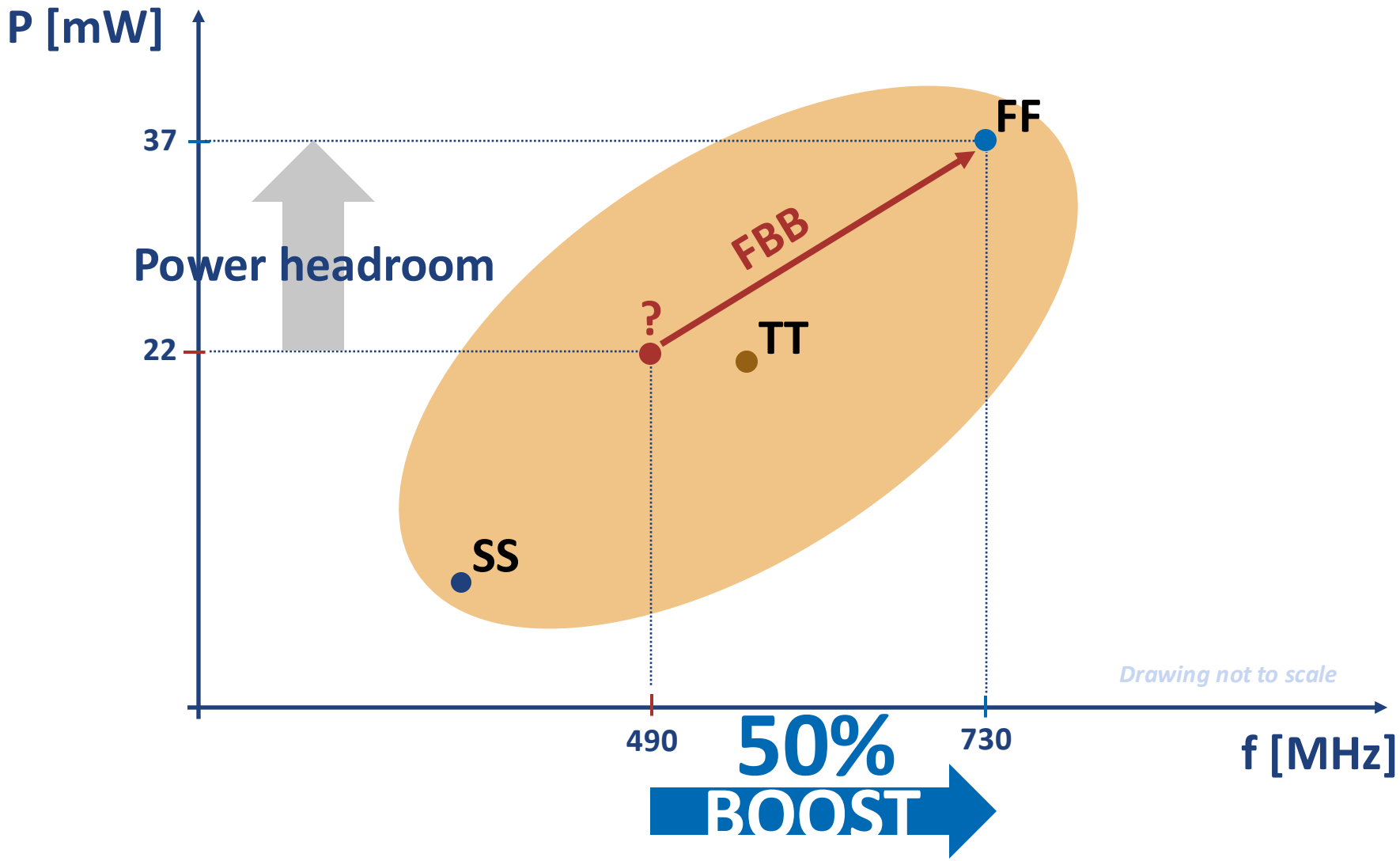

Using Forward body bias to recover performance

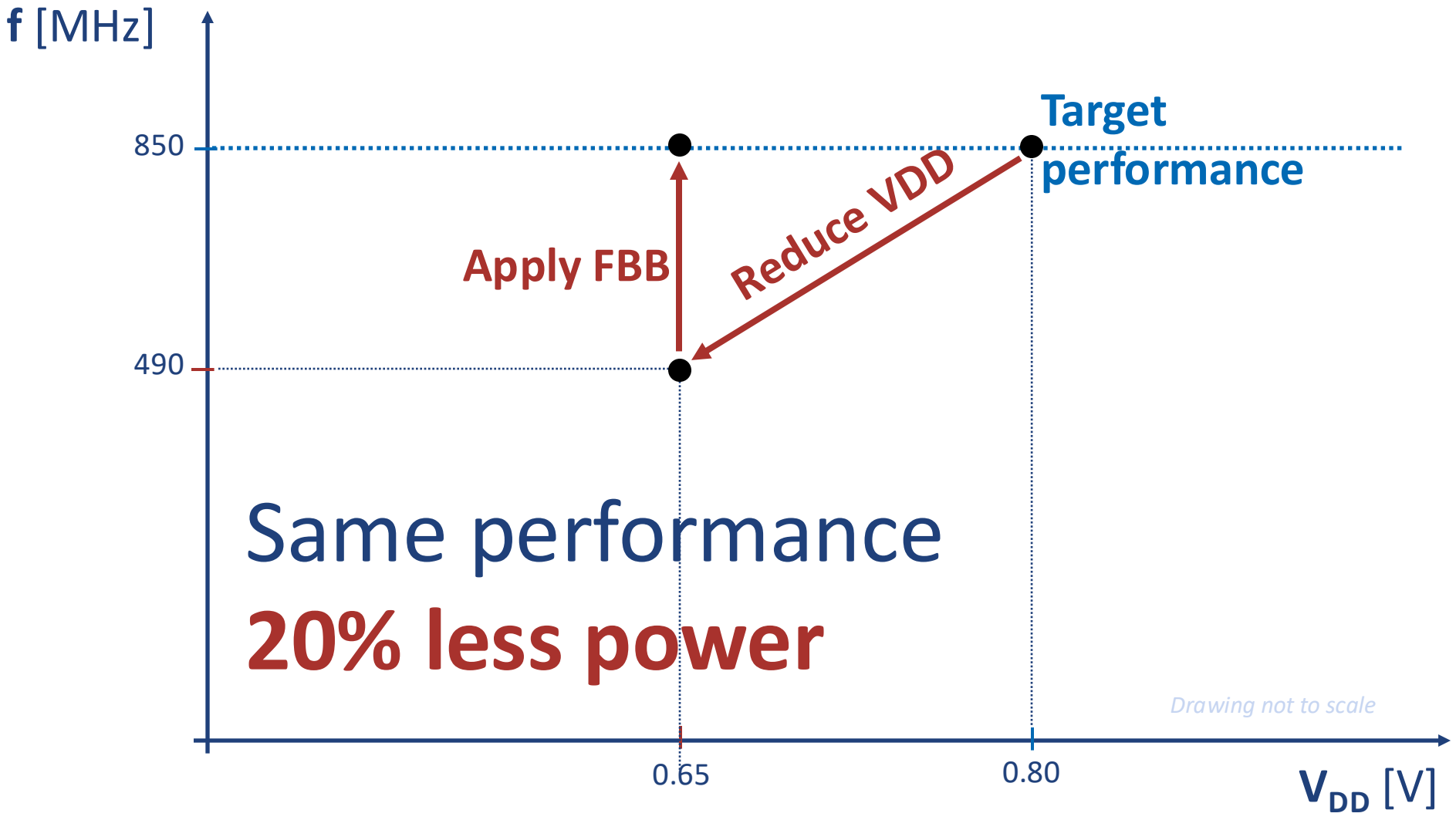

The practical choices of V_{DD} and V_{th} recapitulated

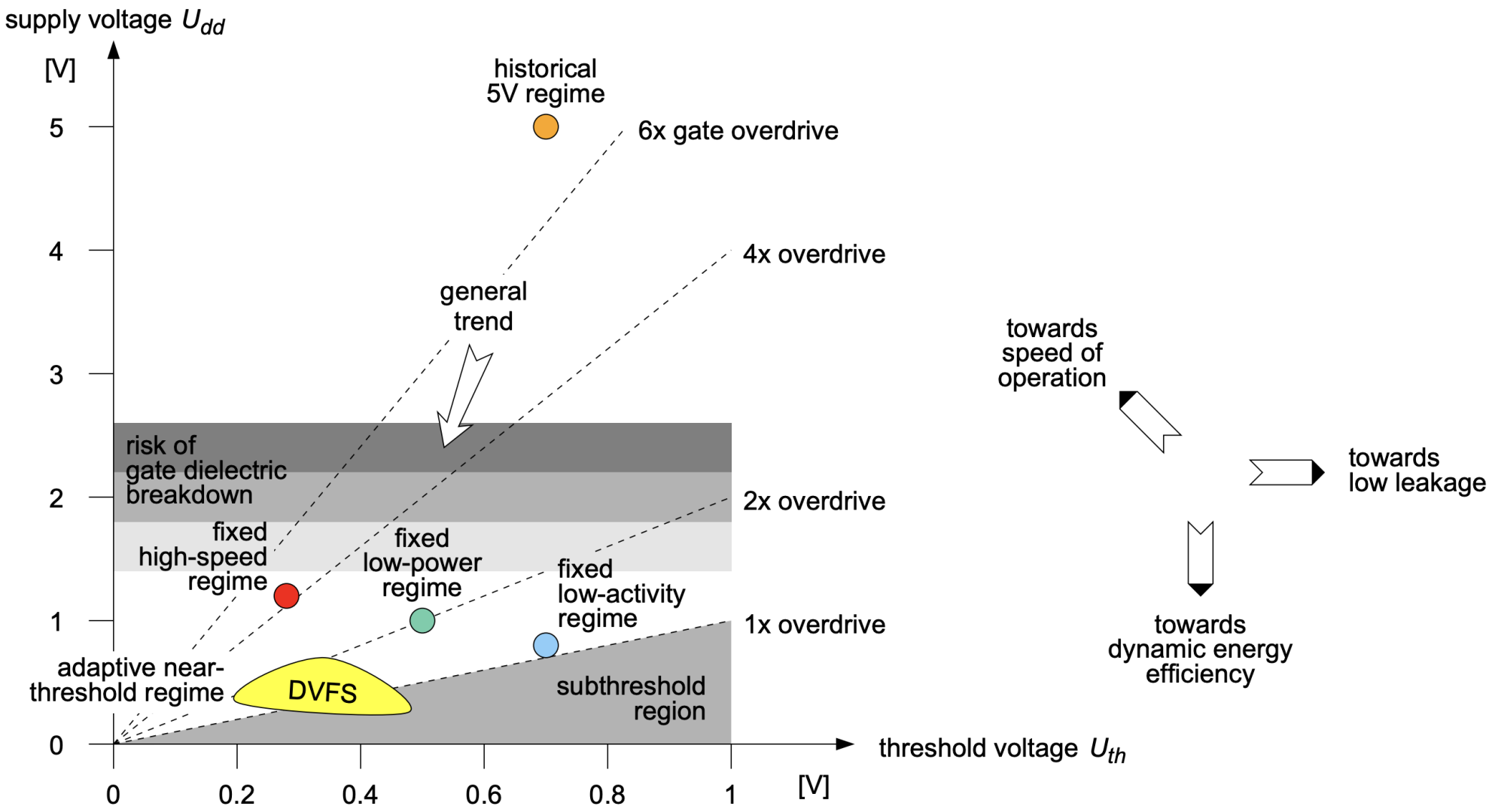

Slide adapted from Hubert Kaeslin, "Top-Down Digital VLSI Design Vol2: From Gate-Level Circuits to CMOS Fabrication"

How can I save energy / power

- **Better algorithms**
  - Do the same job with fewer resources
    - Quantization, approximation
- **Stop waste**
  - Turn off activity when things are not needed
  - Reduce glitching
- **Reduce voltage when performance not needed (DVFS)**
  - Dynamically tune voltage and frequency to meet the operation requirements
- **Turn-off regions that are not needed**
  - That will reduce leakage

Notice that node activity linearly influences power

- **Activity can easily change orders of magnitude in power**
- **Stop the toggling of nodes if they are not needed**
  - Clock gating (stop the clock propagation if FF is not enabled)
  - Input silencing (stop combinational propagation of signals that will not be needed)
    - i.e. ALU, multiple parallel units work on the same set of inputs, only one will be selected
- **Reduce glitching activity**
  - Shorter pipeline stages have less opportunity for glitching
  - Tools can balance paths so that glitching is reduced
- **Algorithmic choices**
  - Number formats can also influence activity (sign/magnitude, gray code vs binary)
  - Parallelization, speculation all come at additional activity,
    Balance performance/power

Dynamic Voltage and Frequency Scaling

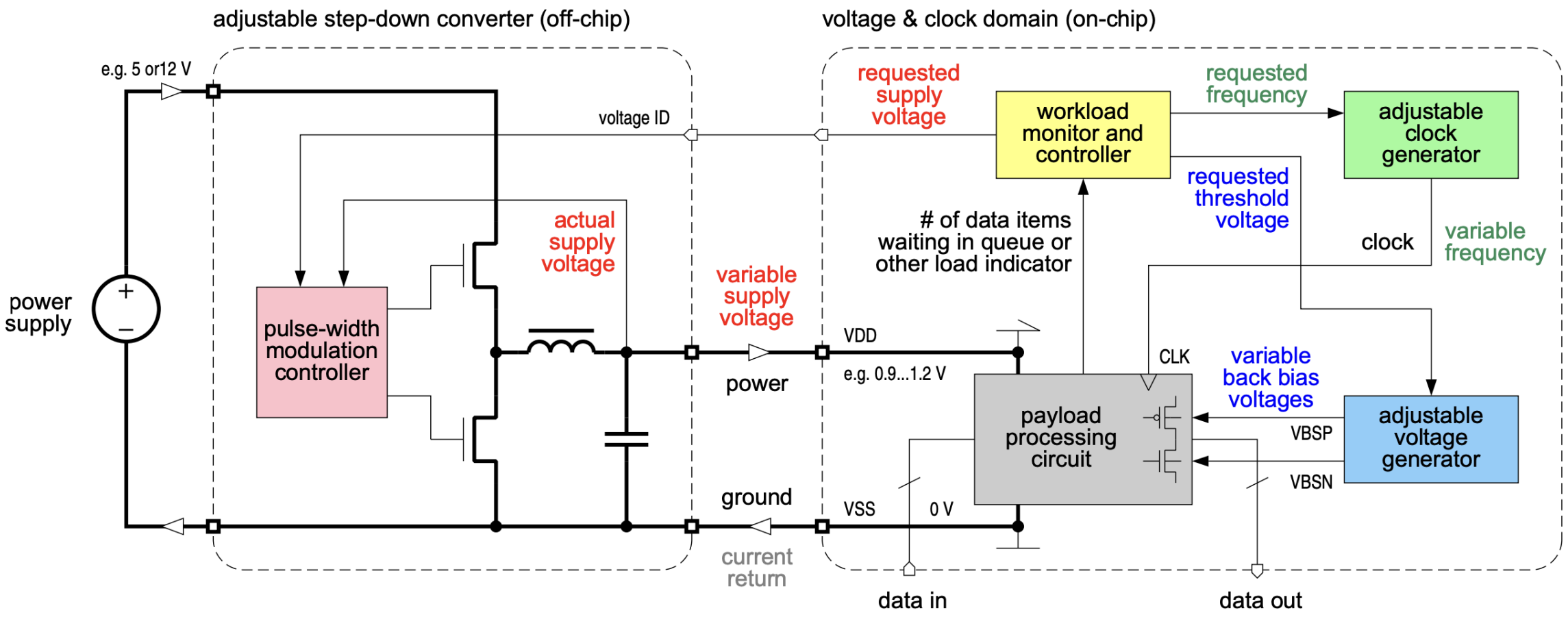

Slide adapted from Hubert Kaeslin, "Top-Down Digital VLSI Design Vol2: From Gate-Level Circuits to CMOS Fabrication"

Power gating, shutting down parts that are not needed

- **Power gating transistors can switch blocks off when not needed**
  - Block is no longer consuming any power
- **But..**
  - We will lose state in the block
    - May need to be saved/restored (costs energy)
  - Power network will need to be charged up
    - Remember charging capacitance requires energy
    - Power distribution needs lots of capacitance
  - Charging up will need time
    - High current needed to charge up
- **Only pays off for prolonged periods.**

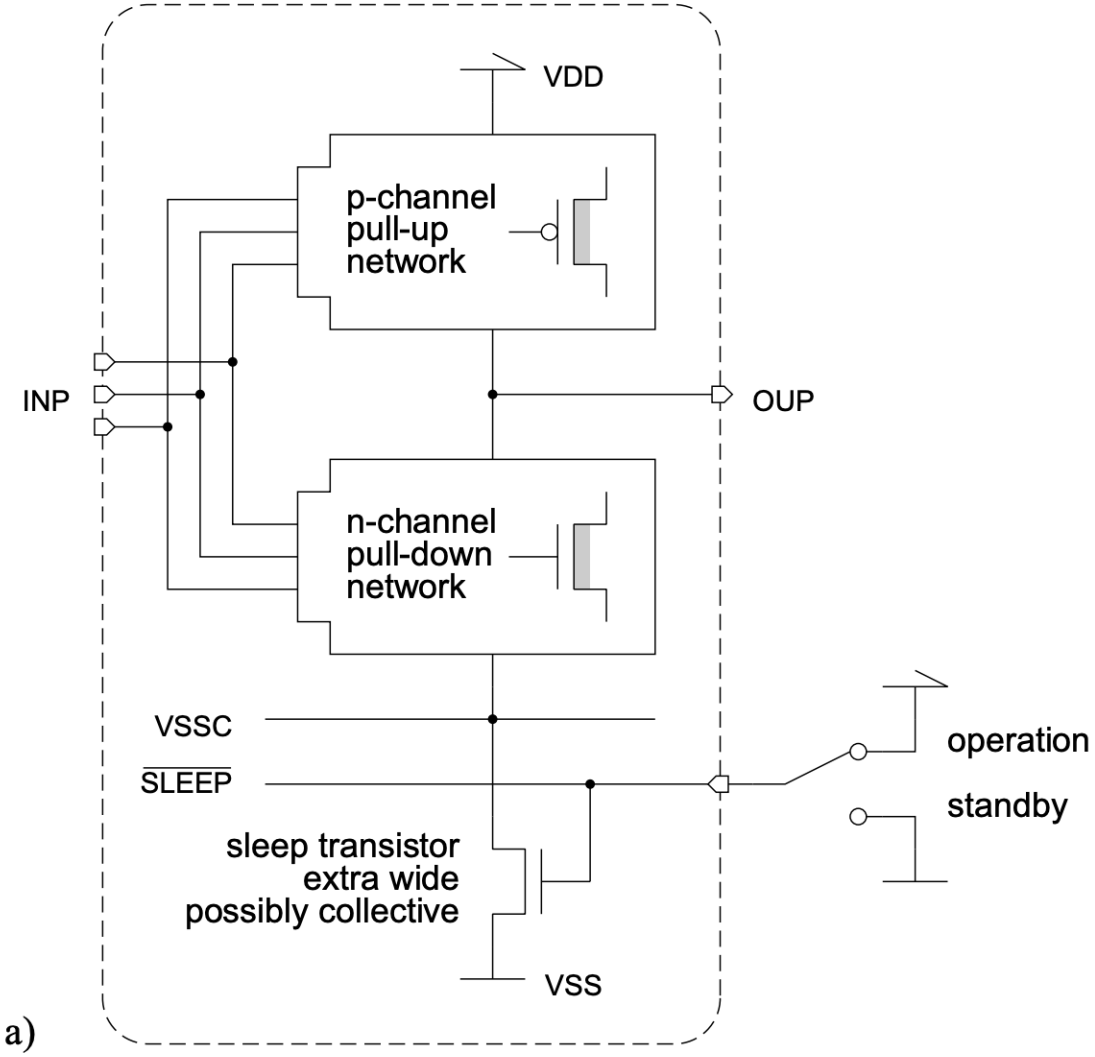

a)

We care deeeply about energy and power efficiency

- **Power is important for current and thermal limits**
- **Energy is what actually counts in terms of getting things done**
- **What matters:**
  - VDD potentially saves the most
    - Can not reduce it beyond some point
    - Operating conditions V_{DD} and f depend on each other, DVFS techniques employ this knowledge
  - Activity α is a very important component, important to get it right
    - Can be reduced algorithmically, or through clock gating, input silencing
    - Glitching can create significant activity
  - C depends on the circuit, be smarter how you design to reduce it
    - Power gating can also be used to switch off parts fo the circuit, but it is not for free
- **Basically we need to stop waste**

VCD

Value Change Dump

Key part of the dynamic power is switching activity

- **VCD files are used to capture the changing of values on every net**
  - A functional simulator (Verilator) can dump these changes directly to a file
  - One entry for every time a signal has changed its value during simulation
- **For statistical power analysis:**
  - We need to find the switching activity of each node
    - Multiplied by the capacitance of the node, and summed over all nodes gives power
    - Frequency and Supply voltage are constant for the analysis
  - This would be one value per node, information can be extracted from VCD
    - No need to keep the entire file, just need the node activity..
- **For a dynamic power analysis (to see current within one clock cycle)**
  - The waveform captured by VCD is relevant
  - Needed for Signal integrity more than for power analysis

Getting the correct switching activity is not trivial

- **Glitching can account for significant activity**
  - Proper backannotation is required to capture realistic delay for all gates
    - Annotated using SDF that is extracted after placement and routing with all parasitics
  - Such simulations take longer
- **The simulated circuit needs to perform 'typical' activity**
  - As simulations take longer, can not afford to run very long simulations
  - Need to find vectors that show typical activity quickly
  - Setting the chip up so that it can start performing typical activity not trivial
- **You are as accurate as the vectors you use**
  - Switching activity directly scales the dynamic power
  - Easy to make mistakes in orders of magnitude

Anatomy of a VCD file

```
$timescale
        1ns
$end

$scope module tb_croc_soc $end

$scope module i_croc_soc $end
$var parameter 32 ! GpioCount $end
$var wire 1 " clk_i $end
$var wire 1 # rst_ni $end
$var wire 1 $ ref_clk_i $end
$var reg 16 @ gpio_o [15:0] $end
# […]
$upscope $end
$enddefinitions $end
```

```
$dumpvars
#0
1"
0#
1$
b1111000011001100 @
$end
#25
0"
#50
1"
#56
1#
```

The following week

- **Introduction to testing**
  - Stuck at fault model
  - Automatic Test Pattern Generation
- **Completing our understanding of the cost structure of ICs**
  - Why and how testing contributes to unit costs
- **Improving the test quality of our circuits**
  - Design for test methodologies
- **The WLF file**

Next week

- We talk about your projects, answer your questions
- How is it going?
- How to approach the problem
- Balancing your ambition with your resources
- About writing reports