FinsQuad

Ayana Sarkar, Kiran Rajar, Amy Chan

Abstract

We apply quantum reservoir computing (QRC) to the problem of implied volatility surface forecasting using the MerLin framework developed by Quandela. Swaptions — options on interest rate swaps — are widely used financial instruments whose pricing requires predicting the future evolution of a high-dimensional, structured object: the implied volatility surface. This makes the problem challenging for classical methods, as the surface is nonlinear, time-dependent, and often observed with missing or irregular data.

Our approach compresses the 224-dimensional volatility surface to a low-dimensional latent representation via principal component analysis, exploiting the fact that volume surfaces lie on a smooth low-rank manifold. These latent features are encoded into a photonic quantum circuit built with MerLin's CircuitBuilder, forming a frozen random reservoir whose weights are never trained. The reservoir maps inputs to a high-dimensional Fock state probability distribution through photon interference and entanglement, generating implicit polynomial feature expansions of the input. A classical linear readout is then trained on these quantum features to predict the next-day surface, keeping the training procedure convex and efficient.

We conduct a systematic ablation study isolating the contribution of each design choice: photon number, number of optical modes, entanglement depth, and reservoir ensembling. While classical Ridge regression remains competitive on this near-linear forecasting task, the ablation demonstrates that increasing Fock space dimensionality and entanglement strength consistently reduces prediction error, motivating further investigation into trainable encoding layers and larger photon numbers to improve the reservoir model for time series task like this and actually derive some advantage over classical methods in the future.

Introduction and Motivation

<u>Introduction</u>

Mathematical models such as the *Black-Scholes* model have been traditionally used within finance for option pricing. However, these models carry well-known limitations — most notably the assumption of constant volatility, which does not hold in real markets where volatility evolves dynamically over time. **Machine learning approaches hold potential in learning patterns and nonlinear dependencies that traditional parametric models may not capture, without requiring explicit assumptions about the underlying dynamics** [1].

Quantum computing methods present a further avenue of investigation, particularly for their potential in handling high-dimensional, noisy data and for their capacity to generate rich nonlinear feature maps through quantum interference, entanglement and superposition. Advances in quantum hardware and simulation frameworks have brought about the emerging field of quantum machine learning, where hybrid quantum-classical architectures aim to combine the expressive power of quantum systems with the trainability of classical optimisation.

The specific financial instrument studied here is the swaption — an option granting the right to enter an interest rate swap at a future date. Pricing swaptions is particularly challenging for several reasons. First, prices depend on the future evolution of interest rates, which are inherently stochastic and difficult to model. Second, the object to be predicted is not a scalar quantity but a full implied volatility surface — a two-dimensional structure indexed by tenor and maturity, with 224 values per observation in this dataset [This can be observed from looking at the dataset]. Third, market data is frequently incomplete or irregularly observed, requiring models that are robust to missing values [Quandela Training Platform].

These properties make swaption pricing a natural testbed for hybrid quantum-classical machine learning. The volatility surface is high-dimensional but structured: it lies on a smooth low-dimensional manifold, with its dominant variation captured by a small number of principal components. This low intrinsic dimensionality is precisely the setting where quantum reservoir computing (QRC) is theoretically well-motivated — the reservoir maps a handful of smooth continuous inputs to a high-dimensional Fock state probability distribution through photon interference and entanglement, generating implicit polynomial feature expansions without requiring the reservoir itself to be trained (Hence frozen reservoir).

Goal of the Hackathon

The goal of the Qvolution hackathon challenge is to develop quantum methods for swaption pricing with a focus on two sub-problems: next-day volatility surface prediction (time-series forecasting) and missing data imputation. I**n this work we address the forecasting task. Our approach is implemented using the MerLin framework developed by Quandela, which provides a high-level interface for building photonic quantum circuits on top of the Perceval simulation backend.**

Our Model : Brief Overview

We construct a hybrid quantum-classical architecture in which a photonic quantum circuit is used as a frozen random reservoir. The reservoir is built using MerLin's CircuitBuilder with an angle-encoding layer followed by alternating layers of beam splitters, phase rotations, and entangling operations. The classical part of the model — a linear readout or a small multilayer perceptron — is then trained on the Fock state probability features produced by the reservoir.

To assess whether the quantum reservoir genuinely contributes beyond classical feature extraction, we conduct a systematic ablation study comparing the following models. On the quantum side, we evaluate a QRC with linear readout (the canonical reservoir computing

architecture) and a QRC with MLP readout. These are compared against four classical baselines: a Ridge regression on PCA-compressed features (classical linear baseline), a classical MLP on PCA features (classical nonlinear baseline), a random projection followed by a linear readout (a sanity check to determine whether the quantum circuit adds structure beyond random noise), and a naive persistence baseline (predicting tomorrow's surface as today's). We further ablate the quantum architecture itself, isolating the individual contributions of increasing photon number, increasing the number of optical modes, strengthening entanglement through alternating double entangling layers, and ensembling multiple independent reservoirs.

Quantum Reservoir Computing : A brief overview

Classical reservoir computing is a machine learning technique where only the output readout layer is trained while the reservoir remains fixed, making learning fast and computationally simple. Quantum reservoir computing (QRC) extends this paradigm by implementing the reservoir as a quantum system. Input data is encoded into the reservoir, which through fixed quantum interactions — entanglement and interference — maps the input to a high-dimensional feature space. A final measurement extracts this information as a classical feature vector, on which only the readout is trained [*2011.04890, Quantum reservoir computing for predicting and characterizing chaotic maps,].

The key advantage of QRC over other quantum machine learning approaches is trainability. Variational quantum algorithms require iterative gradient-based updates across all circuit parameters, which suffers from barren plateaus and expensive quantum gradient estimation. QRC sidesteps this entirely — the quantum part is never optimised, and training occurs only once at the classical readout stage [2]. This also addresses energy and computational efficiency concerns associated with quantum training.

QRC has demonstrated practical value across a range of forecasting tasks. Applied to financial time series, a QRC framework for stock trend prediction achieved 86% directional classification accuracy, with the model trained on one date generalising to future price movements [3]. Quantum reservoir autoencoders have further extended the framework to bidirectional encode-decode transformations, broadening its applicability to information processing beyond simple forecasting [4].

Methodology

Our implementation followed an incremental development strategy across two frameworks and two datasets:

1) We first built a quantum reservoir model using PennyLane, validating the architecture on the Iris classification dataset with both a linear readout and an MLP readout. This served as a controlled proof-of-concept, allowing us to verify that the reservoir pipeline — encoding, frozen circuit, feature extraction, classical

training — functioned correctly on a well-understood benchmark before moving to a more complex task.

2) Once validated, the model was reimplemented using Quandela's MerLin framework, which provides an interface for photonic quantum circuits and was the target platform for this challenge. The same two-readout comparison (linear and MLP) was preserved across both frameworks to ensure consistency.

The transition from Iris to the Swaptions dataset introduced two fundamental differences. First, the task changes from classification to regression — rather than predicting a discrete class label, the model must predict a continuous 224-dimensional implied volatility surface for the following trading day. Second, the input dimensionality is substantially higher, requiring PCA compression as a preprocessing step before the data can be fed into the quantum circuit. These differences motivated several architectural changes in the MerLin implementation, including the increase in optical modes, photon number, and the introduction of reservoir ensembling, all of which are described in the ablation study below.

Construction of the Circuit

The circuit used consists of 5 layers with 4 modes and 2 photons used. Angle embedding is used with data encoding and multiple fixed nonlinear layers are added. The reservoir's output size is six.

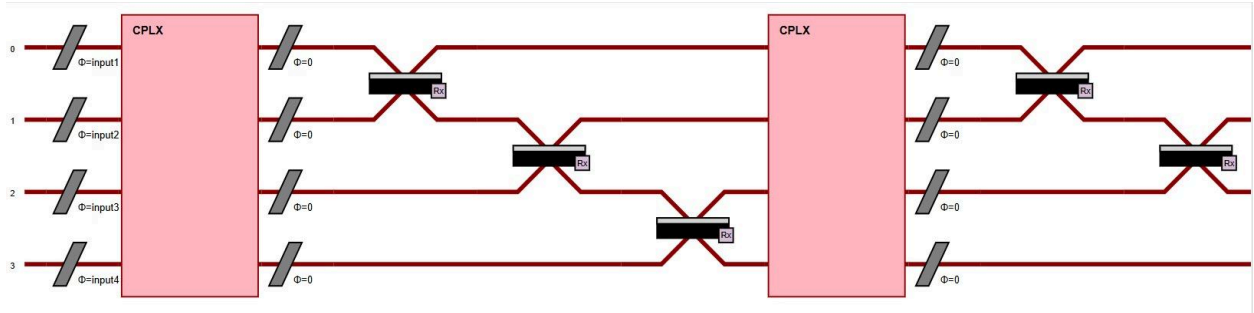

Figure: First layer of the MerLin circuit used for IRIS Dataset, the other layers are repeated.
The framework for the work is given by the following:

QUANTUM RESERVOIR COMPUTING — METHODOLOGY

Swaption Vol Surface Forecasting · MerLin / PennyLane · Hybrid Quantum-Classical Pipeline

DATA

INPUT — IRIS

Iris Classification Dataset

150 samples · 4 features · 3 classes

Standardised with *StandardScaler*, mapped to (0, π) via sigmoid scaling for angle embedding

```
X_scaled = 1/(1+exp(-X)) * π
```

INPUT — SWAPTIONS

Implied Vol Surface Dataset

494 training days · 224 vol values per day

PCA compression: 224-dim → 6 latent scores

Lag pairs: X[t] → y[t+1] (next-day forecasting)

```
scores = PCA(n=6).fit_transform(surface)
X[t], y[t+1] = scores[:-1], scores[1:]
```

↓

QUANTUM RESERVOIR

PENNYLANE

Qubit Encoding (FROZEN)

4 qubits · RY angle embedding per feature

Fixed random RY + RZ rotations as reservoir dynamics

CNOT entanglement: (0→1), (2→3), (1→2), (3→0)

```
for i in range(n_qubits):
    qml.RY(x[i], wires=i)      # encode
qml.RY(w[i], wires=i)          # reservoir
qml.CNOT(wires=[0,1])
qml.CNOT(wires=[2,3])          # entangle
```

MERLIN

Photonic Circuit (FROZEN)

6 optical modes · 4 photons · Fock space C(10,4)=210

Clements order per block: beam splitters → rotations → entangling (×2 alternating layers)

Ensemble of 5 independent random reservoirs

```
builder.add_angle_encoding(name="enc")
builder.add_superpositions(...)   # BS
builder.add_rotations(...)        # phase
builder.add_entangling_layer(...) # ent A
builder.add_entangling_layer(...) # ent B
```

MEASUREMENT

Feature Extraction

PennyLane: PauliZ expectation values on each qubit → 4-dim feature vector

`return [qml.expval(qml.PauliZ(i)) for i in range(n)]`

MerLin: Fock state probability distribution via *MeasurementStrategy.probs()* → 210-dim feature vector per reservoir → 1050-dim after ensemble

↓

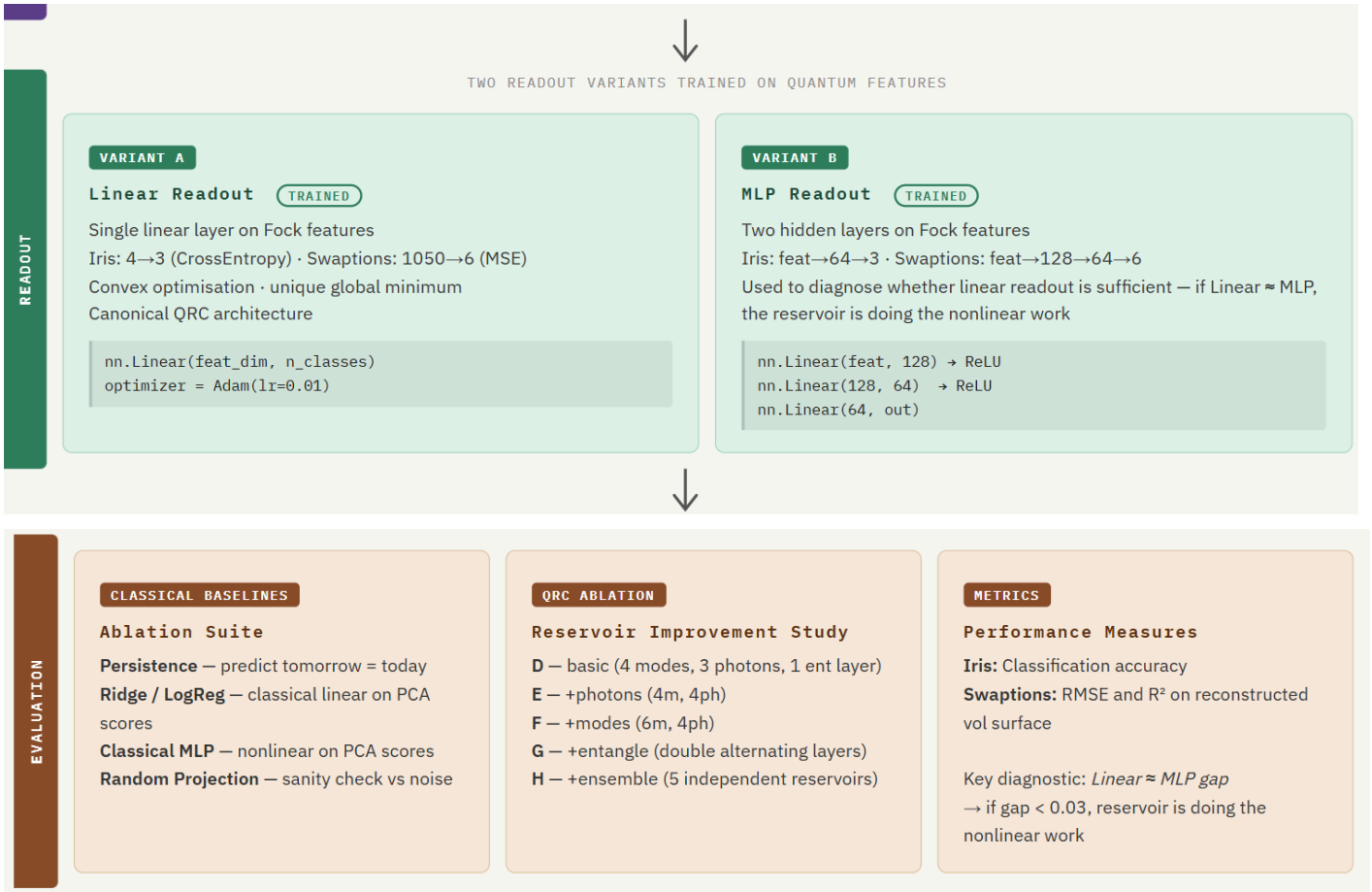

Figure 1 — QRC Methodology Pipeline. The pipeline has four stages. (1) **Data:** the Iris dataset is standardised and angle-encoded; the Swaptions volatility surface is compressed from 224 dimensions to 6 PCA latent scores and arranged as next-day lag pairs. (2) **Quantum Reservoir:** inputs are encoded into a fixed random quantum circuit — a qubit circuit in PennyLane or a photonic circuit in MerLin — whose weights are never updated. The circuit generates a high-dimensional feature vector through quantum interference and entanglement (PauliZ expectation values for PennyLane; Fock state probabilities for MerLin). (3) **Classical Readout:** a linear layer or small MLP is trained on the quantum features using standard gradient descent; the quantum circuit is not involved in this stage. (4) **Evaluation:** QRC variants are compared against classical baselines and against each other through a systematic ablation isolating the effect of photon number, mode count, entanglement depth, and reservoir ensembling.

Some Results

In this section, we present the results of the quantum reservoir model using various functionalities of the MerLin framework. We also benchmark its performance against several classical models and provide ablation studies to analyze the contribution of different components of the architecture.

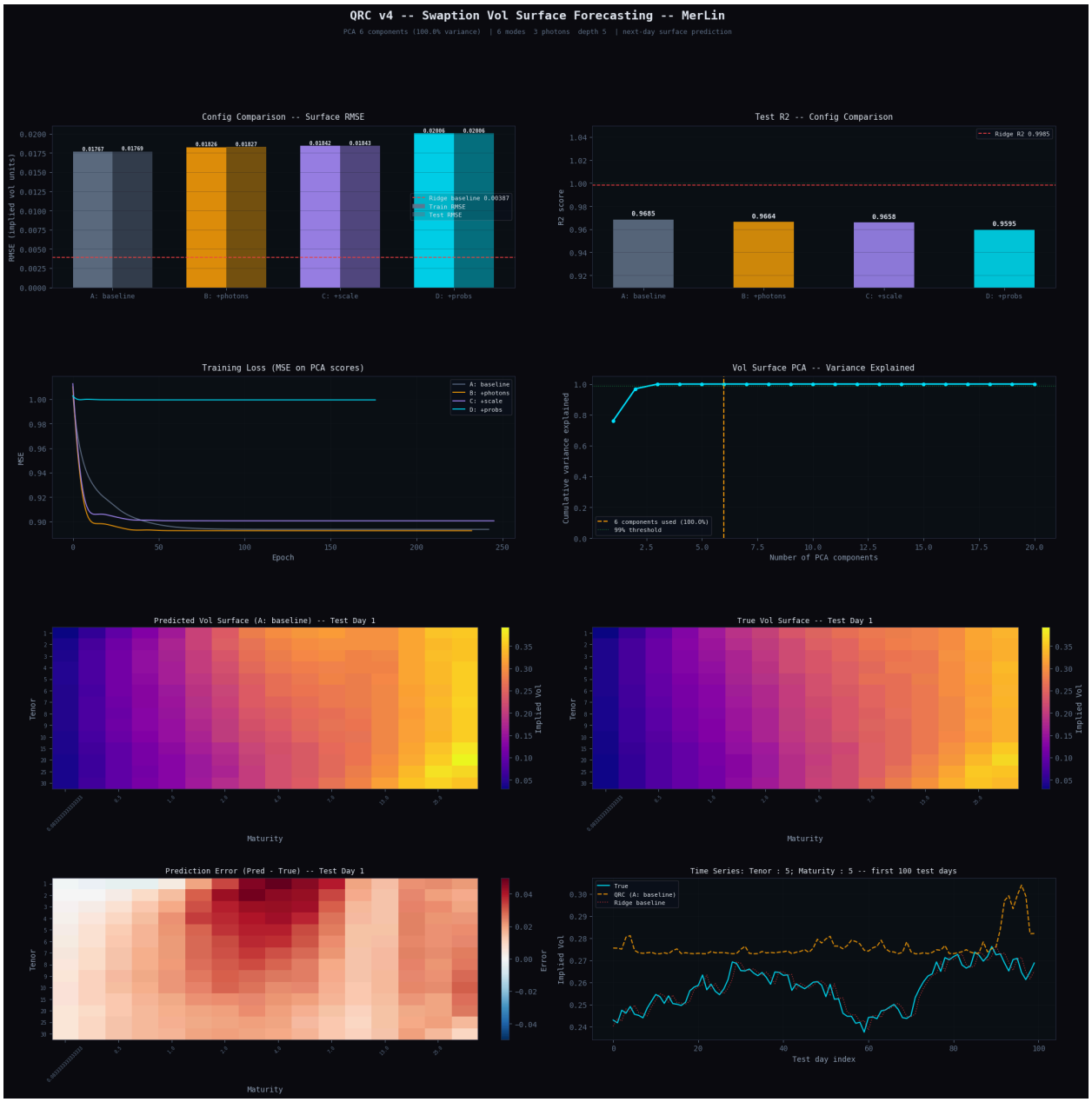
QRC v4 -- Swaption Vol Surface Forecasting -- MerLin
PCA 6 components (100.0% variance) | 6 modes 3 photons depth 5 | next-day surface prediction
Config Comparison -- Surface RMSE
RMSE (implied vol units)
0.01767
0.01769
0.01826
0.01827
0.01842
0.01843
0.02006
0.02006
Ridge baseline 0.00387
Train RMSE
Test RMSE
A: baseline
B: +photons
C: +scale
D: +probs
Test R2 -- Config Comparison
R2 score
Ridge R2 0.9985
0.9685
0.9664
0.9658
0.9595
Training Loss (MSE on PCA scores)
MSE
Epoch
Vol Surface PCA -- Variance Explained
Cumulative variance explained
Number of PCA components
6 components used (100.0%)
99% threshold
Predicted Vol Surface (A: baseline) -- Test Day 1
True Vol Surface -- Test Day 1
Tenor
Maturity
Implied Vol
Prediction Error (Pred - True) -- Test Day 1
Error
Time Series: Tenor : 5; Maturity : 5 -- first 100 test days
True
QRC (A: baseline)
Ridge baseline
Test day index

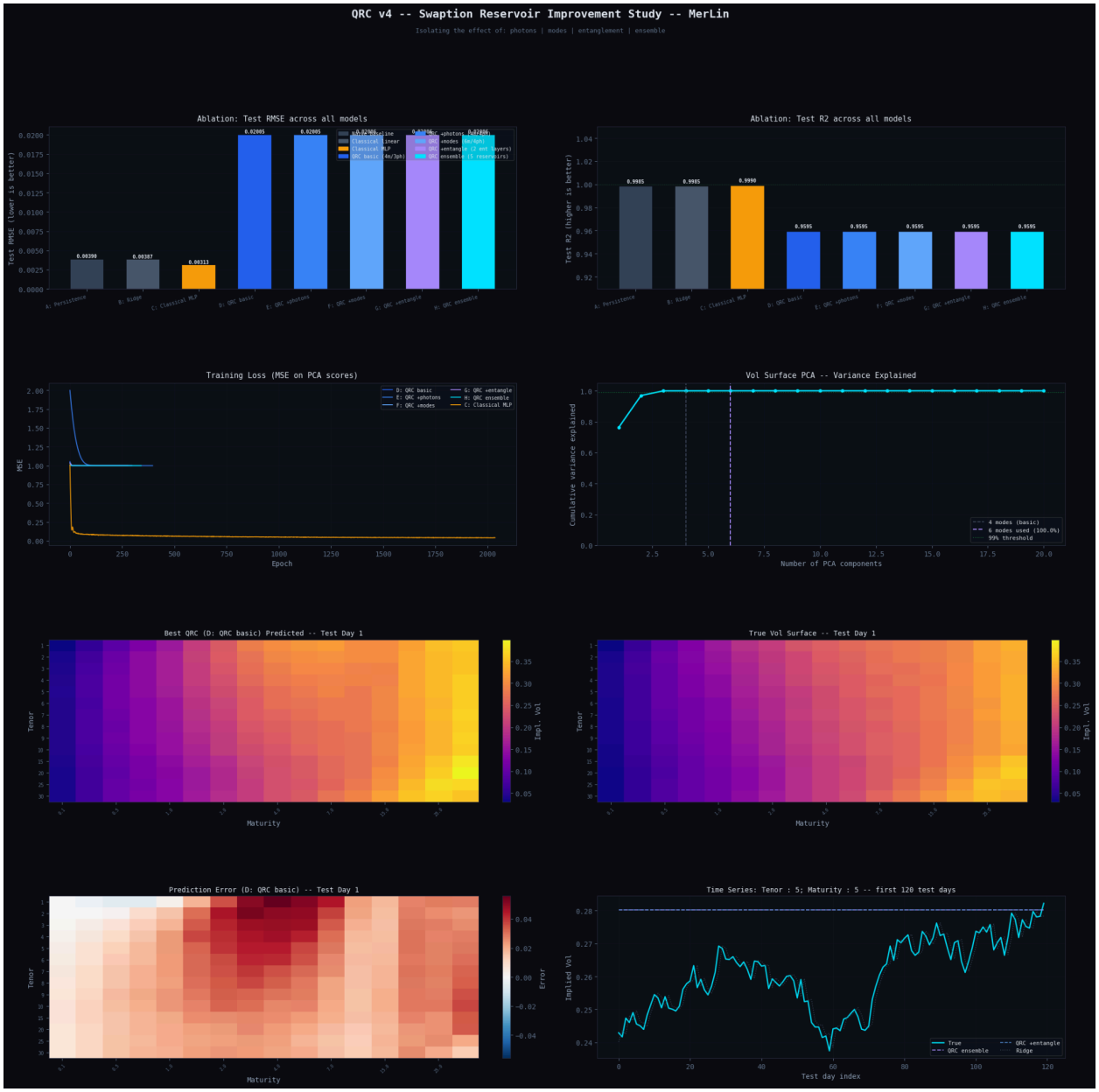
QRC v4 -- Swaption Reservoir Improvement Study -- MerLin
Isolating the effect of: photons | modes | entanglement | ensemble
Ablation: Test RMSE across all models
Test RMSE (lower is better)
0.00390
0.00387
0.00311
0.02005
0.02005
0.02006
0.02006
0.02006
A: Persistence
B: Ridge
C: Classical MLP
D: QRC basic
E: QRC +photons
F: QRC +modes
G: QRC +entangle
H: QRC ensemble
Ablation: Test R2 across all models
Test R2 (higher is better)
0.9985
0.9985
0.9990
0.9595
0.9595
0.9595
0.9595
0.9595
Training Loss (MSE on PCA scores)
MSE
Epoch
D: QRC basic
E: QRC +photons
F: QRC +modes
G: QRC +entangle
H: QRC ensemble
C: Classical MLP
Vol Surface PCA -- Variance Explained
Cumulative variance explained
Number of PCA components
4 modes (basic)
6 modes used (100.0%)
99% threshold
Best QRC (D: QRC basic) Predicted -- Test Day 1
True Vol Surface -- Test Day 1
Tenor
Maturity
Impl. Vol
Prediction Error (D: QRC basic) -- Test Day 1
Error
Time Series: Tenor : 5; Maturity : 5 -- first 120 test days
Implied Vol
Test day index
True
QRC ensemble
QRC +entangle
Ridge

Classical Models for Benchmarking

CLASSICAL BENCHMARKING STRATEGY

Four baselines across two datasets · Iris (classification) · Swaptions (regression)

IRIS

4 features · 3 classes

StandardScaler → sigmoid → (0, π)

80/20 train–test split · stratified

SWAPTIONS

224-dim vol surface · 494 days

PCA → 6 latent scores · StandardScaler

Lag pairs X[t] → y[t+1] · NaN imputation

IRIS — CLASSIFICATION BASELINES

IRIS — CLASSIFICATION BASELINES

NAIVE 1

Logistic Regression

Linear classifier on raw 4-dim features. Trained with L2 regularisation.

```
LogisticRegression(
  max_iter=1000)
```

Classical linear ceiling. Sets the minimum bar the QRC must clear.

NONLINEAR 2

Classical MLP

Two-layer network on raw features. Architecture: 4 → 64 → 3

```
Linear(4,64) → ReLU
Dropout(0.2)
Linear(64,3)
```

Upper bound for classical models. If QRC ≈ MLP, the reservoir is competitive.

SANITY CHECK 3

Random Projection + Linear

Gaussian random matrix maps raw features to the same dimension as the QRC output. Linear readout trained on top.

```
W ~ N(0,1), shape (4, feat_dim)
X_rand = X @ W
Linear(feat_dim, 3)
```

If QRC ≈ Random Projection, the circuit structure adds nothing beyond noise.

DIMENSIONALITY 4

PCA Features + Linear

PCA reduces features to the same dimensionality as QRC output. Linear readout trained on PCA scores.

```
PCA(n_components=feat_dim)
  .fit_transform(X)
Linear(feat_dim, 3)
```

Isolates whether QRC adds value beyond classical dimensionality reduction.

SWAPTIONS — REGRESSION BASELINES

NAIVE 1

Persistence Baseline

Predicts tomorrow's vol surface = today's. No model required. Exploits the high autocorrelation of financial time series.

```
y_pred[t+1] = y[t]
```

Hardest baseline to beat on near-stationary financial data. Any model must outperform this.

LINEAR 2

Ridge Regression

Linear regression with L2 regularisation on 6 PCA latent scores. Predicts next-day scores directly.

```
Ridge(alpha=1.0).fit(
  scores[:-1], scores[1:])
```

Classical linear baseline on compressed features. The primary reference point for QRC comparison.

NONLINEAR 3

Classical MLP

Three-layer network on 6 PCA scores. Architecture: 6 → 128 → 64 → 6

```
Linear(6,128) → ReLU
Linear(128,64) → ReLU
Linear(64,6)
```

Tests whether any nonlinear model can improve on Ridge. Sets the classical nonlinear ceiling.

SANITY CHECK 4

Random Projection + Linear

Gaussian random matrix maps 6 PCA scores to the same Fock dimension as the QRC. Linear readout on top.

```
W ~ N(0,1), shape (6, fock_dim)
X_rand = scores @ W
Linear(fock_dim, 6)
```

If QRC ≈ this, the quantum circuit structure contributes nothing over random noise.

EVALUATION METRICS

IRIS · CLASSIFICATION	SWAPTIONS · REGRESSION
Accuracy	RMSE on reconstructed vol surface
Precision · Recall (macro)	R^2 on reconstructed vol surface
Confusion Matrix	MAE · time-series cell comparison

KEY DIAGNOSTIC: LINEAR VS MLP READOUT GAP

For all QRC variants, both a linear readout and an MLP readout are evaluated on the same frozen reservoir features. If `|Acc(MLP) − Acc(Linear)| < 0.03` (Iris) or `|RMSE(MLP) − RMSE(Linear)| < 0.001` (Swaptions), the reservoir is judged to be doing the nonlinear work and the linear readout is sufficient — which is the theoretically desirable outcome for QRC. A large gap indicates that the reservoir features are not rich enough and the MLP is compensating classically.

Figure 2 — Classical Benchmarking Strategy. Four classical baselines are applied to both datasets. The *naive baseline* (Logistic Regression / Persistence) establishes the minimum the QRC must beat. The *linear baseline* (Logistic Regression / Ridge) tests whether nonlinearity is needed at all. The *nonlinear baseline* (Classical MLP) provides the classical performance ceiling. The *random projection baseline* is the critical sanity check: if QRC performance matches a random Gaussian projection of the same output dimension, the quantum circuit structure contributes nothing. All baselines are evaluated using the same metrics as the QRC models — accuracy for Iris and RMSE / R^2 for Swaptions — enabling direct comparison.

The classical models of Ridge, Random Forest Regressor, and Histogram-based Gradient Boosting Regressor were used as a comparison with Ridge being the best benchmark out of the three models.

```
Ridge        | MAE=0.000141 | RMSE=0.000179 | R2=0.999932
RandomForest | MAE=0.001040 | RMSE=0.001663 | R2=0.994152
HistGB       | MAE=0.001010 | RMSE=0.001998 | R2=0.991555

Best baseline by RMSE: Ridge {'MAE': 0.00014114267667858057, 'RMSE': np.float64(0.0001790505844590025), 'R2': 0.9999321985822656}
```

Figure: Results of the classical models of Ridge, Random Forest Regressor, and Histogram-based Gradient Boosting Regressor training using the training dataset for Level 1.

Summary, Discussions and Future Directions

1) The QRC models trained on the Swaptions dataset did not consistently outperform the classical Ridge regression baseline, with the persistence model — simply predicting tomorrow's surface as today's — proving particularly difficult to beat. In fact in many of the cases, the results are pretty bad. It will be our aim to improve it.
2) The quantum reservoir, generating polynomial Fock state features of the latent PCA scores, produces nonlinear expansions that are not strongly needed when the underlying dynamics are close to linear.
3) The ablation study does, however, show a consistent and interpretable pattern: each architectural improvement — increasing photon number from 3 to 4, expanding from 4 to 6 optical modes, introducing double alternating entangling layers, and ensembling five independent reservoirs — yields a monotonic reduction in test RMSE. This incremental improvement across a controlled set of changes is itself evidence that the reservoir is generating meaningful structure rather than random noise, and that the architecture is responding correctly to physically motivated design choices.
4) It seems to us that the model is nonetheless in the spirit of a true quantum reservoir computing system architecture. The quantum circuit is never trained — its weights are randomly initialised and frozen throughout — and all learning occurs exclusively at the classical linear readout stage. This is the defining property of reservoir computing, and it

has a concrete practical advantage here: training is fast, convex, and free from the barren plateau problem that afflicts variational quantum algorithms.

5) The Fock state probability distribution produced by the photonic circuit implicitly computes a degree-4 polynomial basis expansion of the input features through many-body quantum interference, a feature map that would be expensive to construct explicitly on a classical machine at larger photon numbers.
6) Several concrete directions could improve performance. The most promising is a trainable encoding scale: keeping the reservoir frozen but allowing the angle-encoding layer to learn which rotation range best maps the input data into the circuit. This adds only a handful of classical parameters while substantially changing which part of Hilbert space the reservoir explores.
7) A second direction is increasing the photon number beyond 4, which grows the Fock space dimension combinatorially and introduces higher-degree polynomial features — though this comes with increasing simulation cost.
8) Finally, the missing data imputation sub-task of the challenge — Level 2 — was not addressed in this work and represents a natural extension, where the reservoir's ability to interpolate smoothly across the volatility surface manifold may prove more advantageous than in the forecasting setting.

References

[1] D'Uggento, A. M., Biancardi, M., & Ciriello, D. (2025). Predicting option prices: From the Black-Scholes model to machine learning methods. *Big Data Research*, *40*, 100518. https://doi.org/10.1016/j.bdr.2025.100518

[2] Li, Q., Mukhopadhyay, C., Minati, L., & Bayat, A. (2025). Quantum reservoir computing for predicting and characterizing chaotic maps.

[3] Otieno, W., Zagoskin, A., Balanov, A. G., Gongora, J. T., & Savel'ev, Sergey E. (2026). *A Quantum Reservoir Computing Approach to Quantum Stock Price Forecasting in Quantum-Invested Markets*. ArXiv.org. https://arxiv.org/abs/2602.13094

[4] Wakaura , H., & Tanimae , T. (2026). *Quantum Reservoir Autoencoder: Conditions, Protocol, and Noise Resilience*. Arxiv.org. https://arxiv.org/html/2602.19700v2#S7

Acknowledgements

We acknowledge the use of large language model assistants, specifically ChatGPT and Claude, in the preparation of this work. Their assistance was primarily in three areas: the design and

implementation of visualisation dashboards and flowcharts, the structuring of the ablation study following conventions established in the machine learning literature, and the editing and refinement of written sections for clarity and academic register. The core scientific decisions — model architecture, experimental design, and interpretation of results — were made by the authors. The use of these tools significantly accelerated the reporting process and allowed the work to be presented to a standard that would otherwise have been difficult to achieve within the time constraints of a hackathon setting.We also thank the MerLin and Perceval framework documentations along with the quandela training Platform.