Home Automation System

using DTMF Digital Control

Final Project Report

Name	Student ID
Sazzad Hossain	1610139042
Md. Moniruzzaman Firoz	1511198042
Mohammad Abdullah Siddiky	1620641042
Nurun Naima Most. Shahera Tuly	1620617042

Course: CSE231 Digital Logic Design

Department of Electrical and Computer Engineering

North South University, Bangladesh

Spring 2018

Supervisor: Rishad Arfin (RSF)

1. Abstract

This project presents a home automation system that uses Dual Tone Multi-Frequency (DTMF) telephone signals to control household appliances remotely. The system overcomes the limitation of conventional wall switches that require a person to be physically present at the switch. A user can turn any connected appliance ON or OFF simply by pressing a designated key on a mobile phone keypad.

The system is implemented entirely using digital logic components. No programmable microcontroller is used at any stage. The MT8870 DTMF decoder IC receives the phone tone via an AUX wire and converts it to a 4-bit binary signal. The ULN2003 Darlington transistor array uses this signal to drive three relay switches, each controlling one load. The project successfully demonstrated remote switching of three loads representing a light, a fan, and a television.

2. Introduction

Automation is the use of control systems and information technology to reduce the need for human effort in operating devices. Home automation is one of the most rapidly growing areas of modern technology, allowing residents to control lights, fans, air conditioning, and other appliances without physical contact.

Traditional home control systems rely on wall-mounted switches that require the user to walk to the switch location. This project proposes a simpler and more accessible alternative using DTMF technology, which is already present in every mobile phone.

DTMF stands for Dual Tone Multi-Frequency. When a key is pressed on a phone keypad, the phone generates a tone made of two combined frequencies, one from a row group and one from a column group. The MT8870 DTMF decoder IC can detect and decode this tone into a 4-bit binary code, which is then used to control relay switches connected to home appliances.

The key contribution of this project is that the entire control logic is implemented in hardware alone. No microcontroller, no Arduino, and no software is required on the hardware side. This makes the system simple, low-cost, and reliable.

3. Hardware Prototype

The circuit was assembled on two breadboards and powered by 9V batteries. The photograph below shows the completed prototype with the relay module on the right controlling three output loads labelled TV, FAN, and LIGHT.

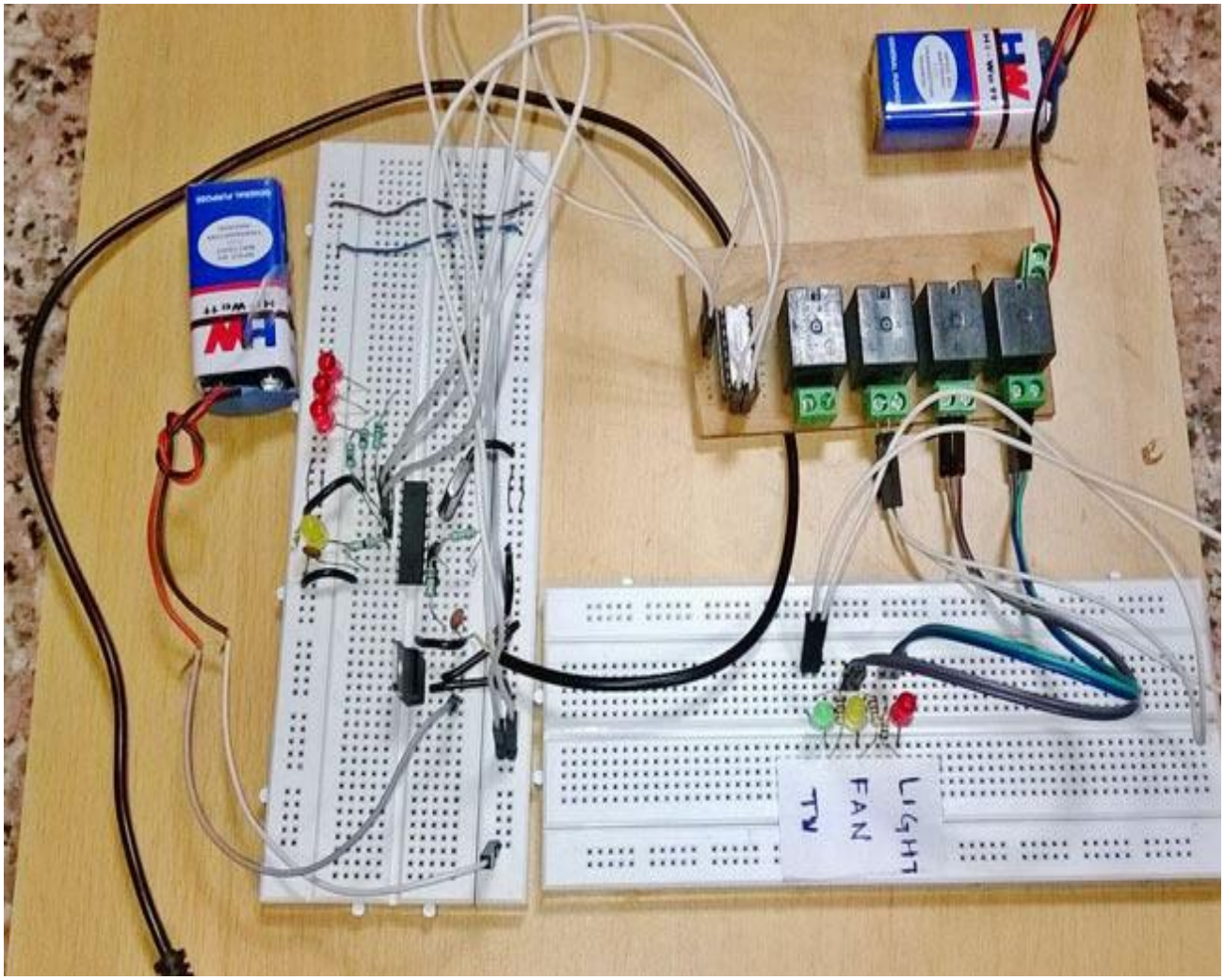

Figure 1: Hardware Prototype

4. Required Components

No.	Component	Qty	Purpose
1	MT8870 DTMF Decoder IC	1	Decodes DTMF telephone tone to 4-bit binary output
2	ULN2003 Darlington Array	1	Drives relay coils from logic-level signals
3	5V Relay	3	Switches loads ON/OFF (Light, Fan, TV)
4	7805 Voltage Regulator	1	Provides stable 5V from 9V battery input
5	3.57 MHz Crystal Oscillator	1	Clock reference for MT8870 decoding
6	9V Battery	2	Power supply for logic and relay circuits
7	LED	3	Visual indicator per relay output channel
8	100K Ohm Resistor	2	Input signal conditioning
9	330K Ohm Resistor	1	Signal conditioning
10	1K Ohm Resistor	6	LED current limiting resistors
11	0.1 uF Capacitor	2	Decoupling capacitor
12	22 pF Capacitor	2	Crystal oscillator load capacitors
13	AUX Wire (3.5mm)	1	Carries DTMF audio from phone to circuit
14	Breadboard	2	Prototyping base for the circuit
15	Terminal Block (PVT)	4	Relay output connections to load appliances
16	Connecting Wires	—	Jumper wires for breadboard connections

Table 1: Component List for the DTMF Home Automation System.

4.1 Component Image References

The following links provide component images for each major IC used in this project.

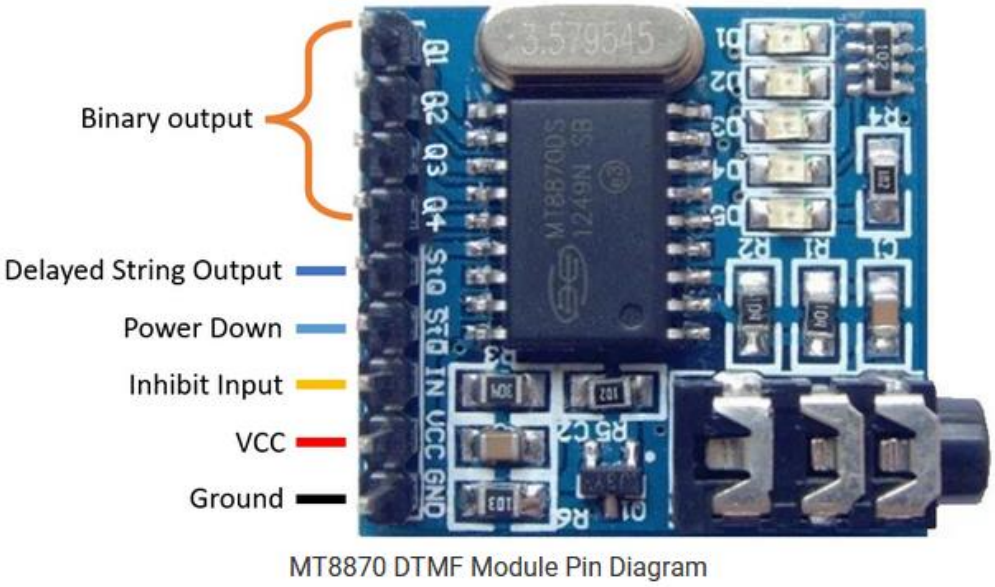

Figure 2: MT8870 DTMF Decoder IC

Figure 3**:** ULN2003 Darlington Transistor Array

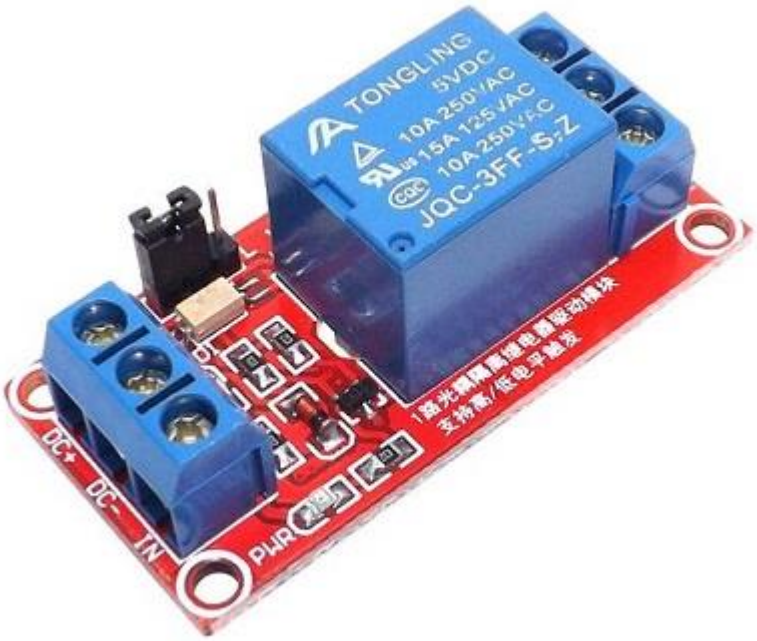

Figure 4: 5V Relay Module

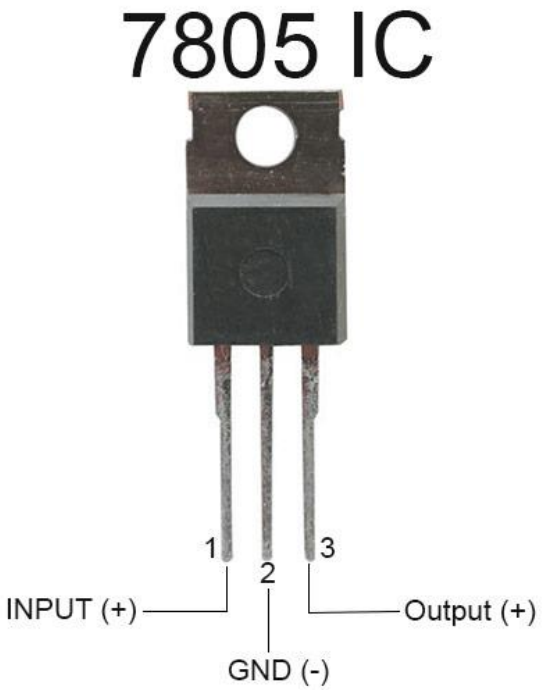

Figure 5: LM7805 Voltage Regulator IC

Figure 6: 3.57 MHz Crystal Oscillator

5. Component Descriptions

5.1 MT8870 DTMF Decoder IC

The MT8870 is the central component of this system. It detects DTMF tones from a telephone line and decodes the keypad digit pressed on the remote phone. The DTMF tone received over the AUX wire is composed of two distinct frequency components. The MT8870 identifies the combination and outputs a 4-bit binary code on its Q1, Q2, Q3, and Q4 output pins. A 3.57 MHz crystal oscillator connected to its OSC pins provides the internal timing reference required for accurate tone detection.

5.2 ULN2003 Darlington Transistor Array

The ULN2003 is an array of seven NPN Darlington transistors, each capable of sinking 500 mA at up to 50V. In this circuit it acts as a driver between the low-current logic outputs of the MT8870 and the higher-current relay coils. It includes internal flyback diodes that protect the circuit from voltage spikes when the relay coils are switched. This circuit uses channels 5, 6, and 7, driven by Q2, Q3, and Q4 outputs of the MT8870 respectively.

5.3. 5V Relay

A relay is an electromechanical switch. When the ULN2003 output activates the relay coil, a physical contact inside the relay closes and connects the load appliance to its power supply. Three relays are used in this circuit, one for each load: light, fan, and TV.

5.4. 7805 Voltage Regulator

The 7805 provides a stable 5V output from a 9V battery input. Without voltage regulation, fluctuations in the battery supply could cause the MT8870 and ULN2003 to malfunction. The 7805 ensures the logic circuit receives a clean, constant 5V supply regardless of battery condition.

5.5. 3.57 MHz Crystal Oscillator

Connected to the OSC1 and OSC2 pins of the MT8870 via two 22 pF capacitors grounded at each side, the crystal provides the stable clock signal that the MT8870 requires for internal tone detection and decoding. The 3.57954 MHz frequency is the standard reference for DTMF decoding.

6. System Design

6.1 How It Works

The following four stages describe the complete signal path from key press to load switching:

Stage 1: DTMF Input

A mobile phone is connected to the circuit input via a 3.5mm AUX wire. When the user presses a key on the phone keypad, the phone generates a DTMF tone. This audio signal travels through the AUX wire into the IN+ and IN- pins of the MT8870 decoder.

Stage 2: DTMF Decoding

The MT8870 IC detects the dual-tone frequency combination and outputs the corresponding 4-bit binary code on pins Q1, Q2, Q3, and Q4. For this circuit, Q2, Q3, and Q4 are the active outputs. Key 2 activates Q2 only. Key 4 activates Q3 only. Key 8 activates Q4 only.

Stage 3: Relay Driving

The Q2, Q3, and Q4 outputs are connected to ULN2003 input pins 5, 6, and 7 respectively, each through a 1K resistor and an LED indicator. When an input goes HIGH, the corresponding ULN2003 output channel sinks current through the relay coil, energising the relay.

Stage 4: Load Switching

Each energised relay closes its contact and connects the corresponding load to the power supply. Pressing the same key again de-energises the relay and disconnects the load, acting as a toggle switch.

6.2 Key-to-Load Mapping

Phone Key	MT8870 Output (Q1 Q2 Q3 Q4)	Relay	Load
2	0 1 0 0	Relay 1	Light
4	0 0 1 0	Relay 2	Fan
8	0 0 0 1	Relay 3	TV

Table 2: DTMF key-to-relay-to-load mapping based on MT8870 4-bit output truth table.

6.3 Circuit Connections

The connections of the circuit are as follows:

1. Connect the AUX wire from the mobile phone headphone jack to IN+ and IN- pins of the MT8870.
2. Connect a 100K resistor to the IN- pin and a 0.1 uF capacitor for input signal conditioning.
3. Connect the OSC pins 7 and 8 of the MT8870 to the 3.57 MHz crystal. Ground each side of the crystal through a 22 pF capacitor.

4. Connect Q2, Q3, and Q4 output pins of the MT8870 through 1K resistors and LEDs to ULN2003 input pins 5, 6, and 7.
5. Connect the 7805 regulator: 9V battery to input pin, 5V output to VCC of MT8870 and COM pin of ULN2003. Also connect 5V to relay coil pin 2 on all three relays.
6. Connect ULN2003 output pins to relay coil pin 1 on each relay.
7. Connect relay switching contacts through terminal blocks to the load appliances.

7. Software Simulation

Although the hardware circuit operates without any code, a software simulation was developed to model the circuit behaviour and serve as documentation for the project repository. The simulation runs on a standard computer and demonstrates the same logic that the hardware performs physically. The simulation is written in Python and consists of two modules:

- **mt8870.py:** A software model of the MT8870 DTMF decoder IC, including the full 4-bit output truth table for all 16 DTMF keys and the dual-frequency tone reference for each key.
- **dtmf_relay_simulator.py:** The main controller that connects the decoder model, the ULN2003 driver model, and the relay controller into a complete signal chain.

The simulation can be run in two modes: a demo mode that runs a pre-set sequence of key presses, and an interactive mode where the user types keys manually to control the simulated loads.

A test suite of 25 unit tests was written to verify the correctness of every component in the simulation, including MT8870 decoding, relay toggling, load independence, invalid key handling, and system reset behaviour.

7.1 Demo Simulation Output

The screenshot below shows the output of running the demo simulation. Each key press shows the MT8870 4-bit binary output, the relay that was activated, and the resulting state of all three loads.

C:\Windows\System32\cmd.exe

```
D:\GitToGithub\home-automation-dtmf>python simulation/dtmf_relay_simulator.py
======================================================
  DTMF Home Automation System  |  Demo Mode
======================================================

  Key mapping:
    '2'  ->  Light
    '4'  ->  Fan
    '8'  ->  TV

  Action: Turn Light ON
  Key '2': MT8870 -> Q1=0 Q2=1 Q3=0 Q4=0
    Relay 1 (Light) -> ON

  Load states:
    [ON]   Light
    [OFF]  Fan
    [OFF]  TV

  Action: Turn Fan ON
  Key '4': MT8870 -> Q1=0 Q2=0 Q3=1 Q4=0
    Relay 2 (Fan) -> ON

  Load states:
    [ON]   Light
    [ON]   Fan
    [OFF]  TV

  Action: Turn TV ON
  Key '8': MT8870 -> Q1=0 Q2=0 Q3=0 Q4=1
    Relay 3 (TV) -> ON

  Load states:
    [ON]   Light
    [ON]   Fan
    [ON]   TV

  Action: Turn Light OFF
  Key '2': MT8870 -> Q1=0 Q2=1 Q3=0 Q4=0
    Relay 1 (Light) -> OFF

  Load states:
    [OFF]  Light
    [ON]   Fan
    [ON]   TV

  Action: Turn TV OFF
  Key '8': MT8870 -> Q1=0 Q2=0 Q3=0 Q4=1
    Relay 3 (TV) -> OFF

  Load states:
    [OFF]  Light
    [ON]   Fan
    [OFF]  TV

  Action: Key with no relay (Q1 only)
  Key '1': MT8870 -> Q1=1 Q2=0 Q3=0 Q4=0
    No relay activated (Q2=Q3=Q4=0).

  Load states:
    [OFF]  Light
    [ON]   Fan
    [OFF]  TV

  Action: Turn Fan OFF
  Key '4': MT8870 -> Q1=0 Q2=0 Q3=1 Q4=0
    Relay 2 (Fan) -> OFF

  Load states:
    [OFF]  Light
    [OFF]  Fan
    [OFF]  TV
```

Figure 2: Simulation Demo Output

7.2 Unit Test Results

The screenshot below shows the results of running the full unit test suite. All 25 tests passed, confirming that the simulation correctly models the hardware circuit behaviour across all test cases.

```
C:\Windows\System32\cmd.exe

D:\GitToGithub\home-automation-dtmf>python -m pytest tests/test_simulator.py -v
============================================= test session starts =============================================
platform win32 -- Python 3.11.3, pytest-9.0.3, pluggy-1.6.0 -- C:\Users\Asus\AppData\Local\Programs\Python\Python311\python.exe
cachedir: .pytest_cache
rootdir: D:\GitToGithub\home-automation-dtmf
plugins: anyio-4.13.0, cov-7.1.0
collected 25 items

tests/test_simulator.py::TestMT8870Decoder::test_all_valid_keys_in_truth_table PASSED                    [  4%]
tests/test_simulator.py::TestMT8870Decoder::test_invalid_key_returns_false PASSED                        [  8%]
tests/test_simulator.py::TestMT8870Decoder::test_reset_clears_all_outputs PASSED                         [ 12%]
tests/test_simulator.py::TestMT8870Decoder::test_std_high_on_valid_tone PASSED                           [ 16%]
tests/test_simulator.py::TestMT8870Decoder::test_tone_frequencies_key_2 PASSED                           [ 20%]
tests/test_simulator.py::TestMT8870Decoder::test_tone_frequencies_key_8 PASSED                           [ 24%]
tests/test_simulator.py::TestMT8870Decoder::test_valid_key_1_outputs_q1_only PASSED                      [ 28%]
tests/test_simulator.py::TestMT8870Decoder::test_valid_key_2_outputs_q2_only PASSED                      [ 32%]
tests/test_simulator.py::TestMT8870Decoder::test_valid_key_4_outputs_q3_only PASSED                      [ 36%]
tests/test_simulator.py::TestMT8870Decoder::test_valid_key_8_outputs_q4_only PASSED                      [ 40%]
tests/test_simulator.py::TestRelayController::test_all_relays_off_initially PASSED                       [ 44%]
tests/test_simulator.py::TestRelayController::test_double_toggle_returns_relay_off PASSED                [ 48%]
tests/test_simulator.py::TestRelayController::test_relays_are_independent PASSED                         [ 52%]
tests/test_simulator.py::TestRelayController::test_toggle_turns_relay_on PASSED                          [ 56%]
tests/test_simulator.py::TestHomeAutomationSystem::test_all_loads_on_then_reset PASSED                   [ 60%]
tests/test_simulator.py::TestHomeAutomationSystem::test_event_log_records_key_presses PASSED             [ 64%]
tests/test_simulator.py::TestHomeAutomationSystem::test_initial_all_loads_off PASSED                     [ 68%]
tests/test_simulator.py::TestHomeAutomationSystem::test_invalid_key_changes_nothing PASSED               [ 72%]
tests/test_simulator.py::TestHomeAutomationSystem::test_key_1_activates_no_relay PASSED                  [ 76%]
tests/test_simulator.py::TestHomeAutomationSystem::test_key_2_toggles_light_off PASSED                   [ 80%]
tests/test_simulator.py::TestHomeAutomationSystem::test_key_2_turns_light_on PASSED                      [ 84%]
tests/test_simulator.py::TestHomeAutomationSystem::test_key_4_turns_fan_on PASSED                        [ 88%]
tests/test_simulator.py::TestHomeAutomationSystem::test_key_8_turns_tv_on PASSED                         [ 92%]
tests/test_simulator.py::TestHomeAutomationSystem::test_loads_are_independent PASSED                     [ 96%]
tests/test_simulator.py::TestHomeAutomationSystem::test_result_contains_load_states PASSED               [100%]

============================================== 25 passed in 0.14s ==============================================
```

Figure 3: Simulation Test Output.

7.3 Running the Simulation

To run the simulation on a local machine with Python installed, navigate to the project folder and use the following commands:

```
python simulation/dtmf_relay_simulator.py
python -m pytest tests/test_simulator.py -v
```

8. Project Repository Structure

The complete project is available on GitHub. The repository is organised as follows:

File / Folder	Description
README.md	Full project documentation with diagrams and instructions
.gitignore	Excludes Python cache and test cache from repository
requirements.txt	Python package dependencies (pytest)
simulation/mt8870.py	Software model of the MT8870 DTMF decoder IC
simulation/dtmf_relay_simulator.py	Main relay controller simulation with demo and interactive modes
tests/test_simulator.py	25 unit tests covering all simulation components
docs/circuit_description.md	Stage-by-stage circuit explanation with connection summary
docs/bill_of_materials.csv	Full component list in spreadsheet format
images/prototype.jpg	Photo of the completed hardware prototype
images/simulation_demo_output.PNG	Screenshot of the demo simulation terminal output
images/simulation_test_output.PNG	Screenshot of the 25 unit tests passing

Table 3: Project repository structure and file descriptions.

9. Outcomes

The home automation system was experimentally tested and found to work correctly. When a mobile phone connected via AUX wire dials a designated key, the corresponding relay activates and the load switches ON. Pressing the same key again switches the load OFF.

The three loads light, fan, and TV were each represented by an LED on the breadboard prototype. All three were successfully controlled from the mobile phone using keys 2, 4, and 8 keypad buttons.

The software simulation produced matching results, confirming that the logic modelled in code correctly reflects the hardware behaviour.

During the project, an initial attempt was made to use NOT gates and diodes as the relay driver instead of the ULN2003. This did not work and caused a fuse failure. The circuit was then corrected by replacing that section with the ULN2003 Darlington array, after which the circuit operated as expected.

10. Uses and Future Work

The current system demonstrates basic remote control of three loads. It can be extended in several directions:

- Lighting control system for homes and offices.
- Integration of sensors such as light sensors, temperature sensors, and motion detectors to create automatic responses.
- Connection to the internet to enable remote control from outside the home over a network.
- Replacement of the AUX wire input with a wireless receiver to eliminate the physical cable connection.
- Scaling to more than three loads by using additional decoder output pins and relay channels.

11. Conclusion

This project successfully designed and implemented a DTMF-based home automation system using only digital logic components. The system demonstrated that household appliances can be controlled remotely using nothing more than a standard mobile phone keypad and a

hardware decoder circuit, without any programmable microcontroller or software running on the hardware.

The project provided practical experience in digital logic circuit design, breadboard assembly, component interfacing, relay driver design, and hardware debugging. A software simulation was additionally developed to document and model the circuit behaviour in code, making the project accessible to others through a public GitHub repository.

12. Acknowledgement

This project was completed as part of CSE231 Digital Logic Design at the Department of Electrical and Computer Engineering, North South University, Bangladesh. The team would like to thank course lecturer Rishad Arfin (RSF) for his guidance and advice throughout the project.

13. References

1. MT8870 DTMF Decoder Datasheet, Zarlink Semiconductor.
2. ULN2003A Darlington Transistor Array Datasheet, Texas Instruments.
3. LM7805 Voltage Regulator Datasheet, Texas Instruments.
4. Circuit Digest: DTMF-Based Home Automation System. https://circuitdigest.com/electronic-circuits/dtmf-based-home-automation-system
5. Wikipedia: Home Automation. https://en.wikipedia.org/wiki/Home_automation
6. Morris Mano, Digital Logic and Computer Design. Pearson Education.