THIS DOCUMENT AND THE DATA DISCLOSED HEREIN OR HEREWITH IS THE PROPERTY OF ALTIUM LIMITED AND MAY BE FREELY DISTRIBUTED IN WHOLE. NO RIGHTS ARE RESERVED OR EXPRESS OR IMPLIED WARANTEE GIVEN.

REVISION	DESCRIPTION	DATE	APPROVED

POWER SUPPLY

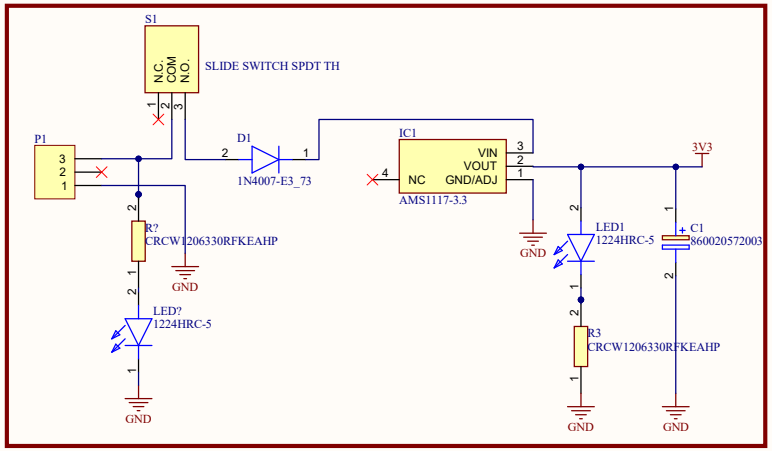

MCU(ESP32)

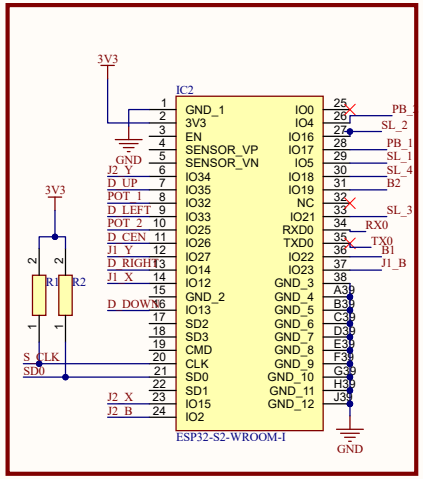

DPAD

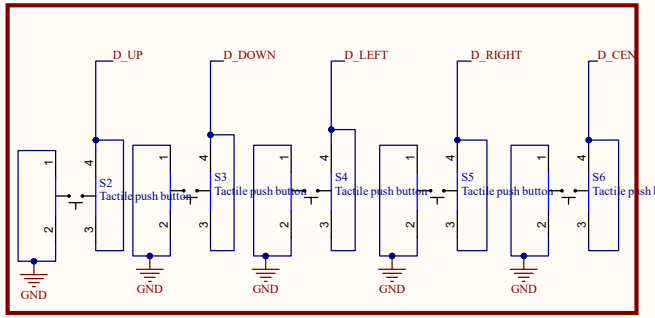

MISC_BUTTONS

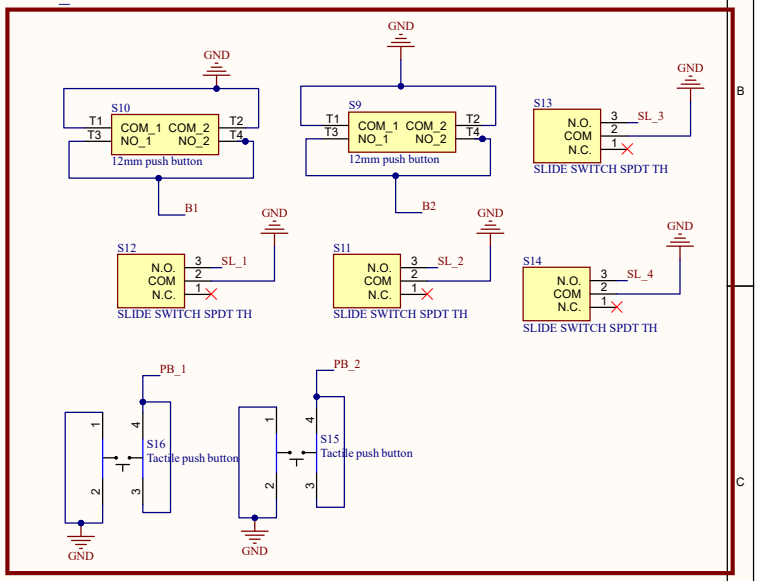

JOYSTICKS

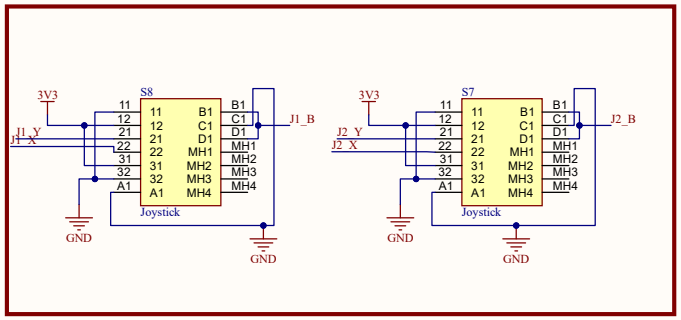

UART

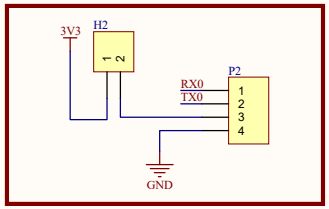

I2C

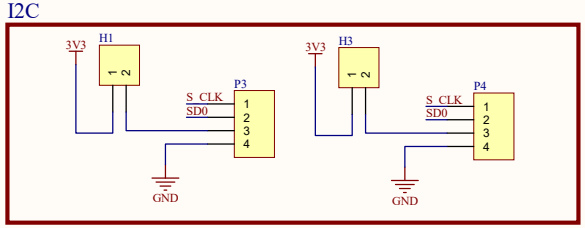

POTENTIOMETERS

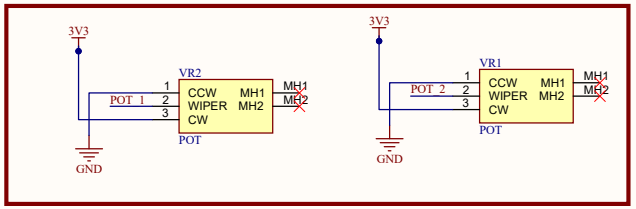

APPROVALS	DATE
ENG: *	
DSN: *	
CHK: *	
REFERENCE DOCUMENTS	
BOM:	
ASSY DWG:	
FAB DWG:	
PCB DWG:	

PROJECT

Altium

PROJECT REVISION: Not in version control | DOCUMENT REVISION: Not in version control | DESIGN ITEM:

TITLE *

SIZE A3 | CAGE CODE | DWG NO. | REV

SCALE: | FILE NAME Epsilon_remote.SchDoc | SHEET 1 OF 1