microcontrollers

1 intro **2**

2 basic electronic **3**
2.1 AC/DC . . . 3
2.2 electric laws . . . 4
2.2.1 basics . . . 4

3 components and circuits **5**
3.1 categories . . . 5
3.2 impedances - impedenze . . . 5
3.3 voltage divider - partitore di tensione . . . 5
3.4 semiconductors . . . 6
3.5 resistori . . . 7
3.5.1 series and parallel . . . 8
3.6 condensatore - capacitor . . . 9
3.6.1 series and parallel . . . 9
3.6.2 questions . . . 9
3.7 circuito rc . . . 10
3.7.1 questions . . . 10
3.8 potentiometer . . . 10
3.9 leds . . . 11
3.9.1 questions . . . 11
3.10 opto isolator . . . 12
3.10.1 questions . . . 12
3.11 transistors . . . 12
3.11.1 Bipolar Junction Transistor . . . 12
3.11.2 Field Effect Transistor . . . 12
3.12 circuits . . . 12
3.12.1 questions . . . 12
3.13 misc . . . 12
3.13.1 sinking and sourcing . . . 12
3.14 questions . . . 13

4 protocols **15**

5 sources **16**

Chapter 1

intro

microcontrollers are small computers in a single integrated circuit.a single **integrated circuit** is a chip

Chapter 2

basic electronic

2.1 AC/DC

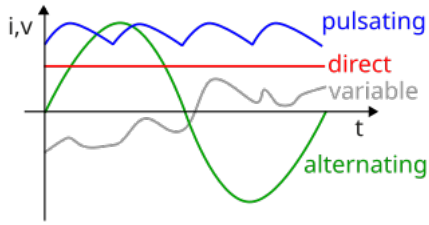

Figure 2.1: types of current

def AC → alternating current is an electric current that periodically reverses direction and changes its magnitude continuosly with time.

example → used to transmit electricity in long distances. less power loss of dc in this scenario.

def DC → direct current is one-directional flow of electric charge.

example → battery

inverter → turns DC in AC.

rectifier → turns AC in DC. (in italiano raddrizzatore) (domanda 40). basically 4 diode in diamond shape see picture below.

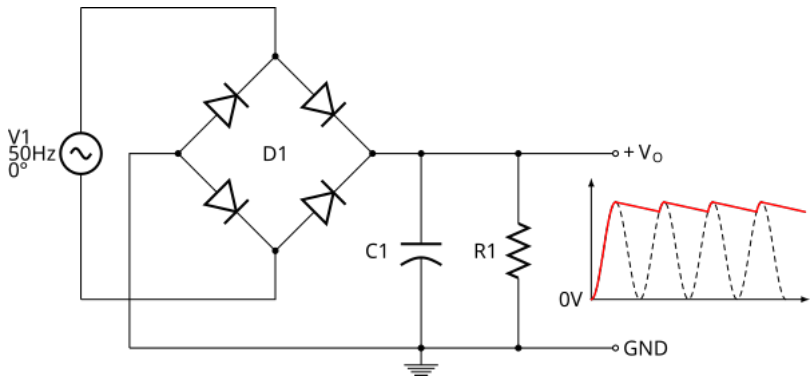

Figure 2.2: Full-wave diode-bridge rectifier with parallel RC shunt filter

2.2 electric laws

2.2.1 basics

- amperes → how many electrons (1 couloumb that is 6.24150910^{18} electrons) are passing through a point in a second
- volts → the electric potential between two points. many electrons in negative side, few electrons on positive side of battery. when the battery is exhausted there are equal number of electrons in each side.
- watt → the power. $W = V \cdot A$
- resistance → how difficult is it to pass for the electrons through a specific material

OHMS LAW

def → electric current is proportional to voltage and inversely proportional to resistance.

$$V = I \cdot R$$
$$R = \frac{V}{I}$$
$$I = \frac{V}{R}$$

- V is the voltage (in volts V)
- I is the current (in amperes A)
- R is the resistance (in ohms Ω)

Chapter 3

components and circuits

3.1 categories

passive → incapable of power gain. example capacitor, resistance

active → capable of power gain. example transistor

electromechanical → can carry out electrical operations by using moving parts or by using electrical connections. example relay, solenoids

note → diodes can be both active and passive.

active diodes → zener diode, led

passive diodes → normal diodes

3.2 impedances - impedenze

def → L'impedenza, in elettrotecnica e elettrologia, è una grandezza fisica che rappresenta la resistenza di opposizione al passaggio della corrente elettrica alternata o corrente variabile, in un circuito. Il concetto di impedenza generalizza la legge di Ohm estendendola ai circuiti funzionanti in regime sinusoidale (comunemente detta corrente alternata): in regime di corrente continua rappresenta infatti la resistenza elettrica.

3.3 voltage divider - partitore di tensione

def → passive linear circuit that produces an output voltage that is a fraction of its input voltage.

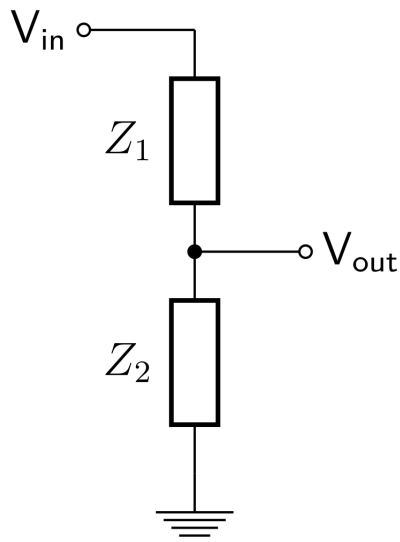

Figure 3.1: Z_1 and Z_2 are impedances

formulas → $V_{out} = \frac{Z_2}{Z_1+Z_2} \cdot V_{in}$

3.4 semiconductors

def → Silicon is a semiconductor, which means it's neither really a conductor (something like a metal that lets electricity flow) nor an insulator (something like plastic that stops electricity flowing). If we treat silicon with impurities (a process known as doping), we can make it behave in a different way. If we dope silicon with the chemical elements arsenic, phosphorus, or antimony, the silicon gains some extra "free" electrons—ones that can carry an electric current—so electrons will flow out of it more naturally. Because electrons have a negative charge, silicon treated this way is called n-type (negative type). We can also dope silicon with other impurities such as boron, gallium, and aluminum. Silicon treated this way has fewer of those "free" electrons, so the electrons in nearby materials will tend to flow into it. We call this sort of silicon p-type (positive type). Quickly, in passing, it's important to note that neither n-type or p-type silicon actually has a charge in itself: both are electrically neutral. It's true that n-type silicon has extra "free" electrons that increase its conductivity, while p-type silicon has fewer of those free electrons, which helps to increase its conductivity in the opposite way. In each case, the extra conductivity comes from having added neutral (uncharged) atoms of impurities to silicon that was neutral to start with—and we can't create electrical charges out of thin air! A more detailed explanation would need me to introduce an idea called band theory, which is a little bit beyond the scope of this article. All we need to remember is that "extra electrons" means extra free electrons—ones that can freely move about and help to carry an electric current. Suppose we join a piece of n-type silicon to a piece of p-type silicon and put electrical contacts on either side. Exciting and useful things start to happen at the junction between the two materials. If we turn on the current, we can make electrons flow through the junction from the n-type side to the p-type side and out through the circuit. This happens because the lack of electrons on the p-type side of the junction pulls electrons over from the n-type side and vice-versa. But if we reverse the current, the electrons won't flow at all. What we've made here is called a diode (or rectifier). It's an electronic component that lets current flow through it in only one direction. It's useful if you want to turn alternating (two-way) electric current into direct (one-way) current. Diodes can also be made so they give off light when electricity flows through them. You might have seen these light-emitting diodes (LEDs) on pocket calculators

and electronic displays on hi-fi stereo equipment.

3.5 resistori

def → informalmente chiamati ~~resistenza~~ (in realta essa e la grandezza fisica che quantifica il valore ohmico). Basically, a resistor limits the flow of charge in a circuit and is an ohmic device where V=IR.

caratteristiche

- resistenza → in Ω. $R = \rho \frac{l}{S}$
  - ρ → resistivita del materiale. dipenede dalla temperatura T
  - l → lunghezza del materiale
  - S → sezione del materiale
- massima potenza → in W. threshold che se superata distrugge/deteriora il resistore

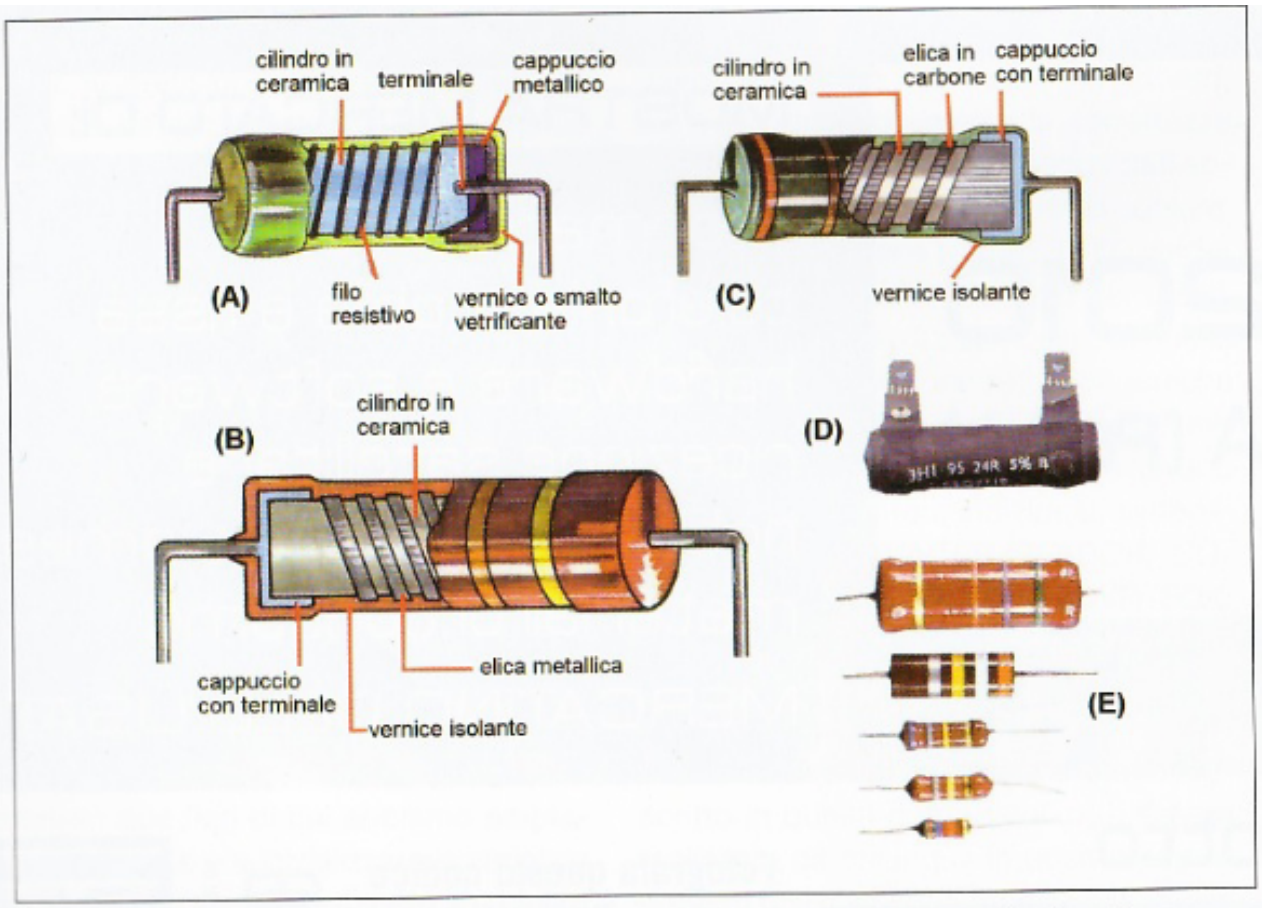

Figura 1: struttura fisica di una resistenza bobinata (A), di una resistenza a strato metallico (B), a strato di carbone (C) e aspetto esterno di alcune resistenze reali (E) [1].

3.5.1 series and parallel

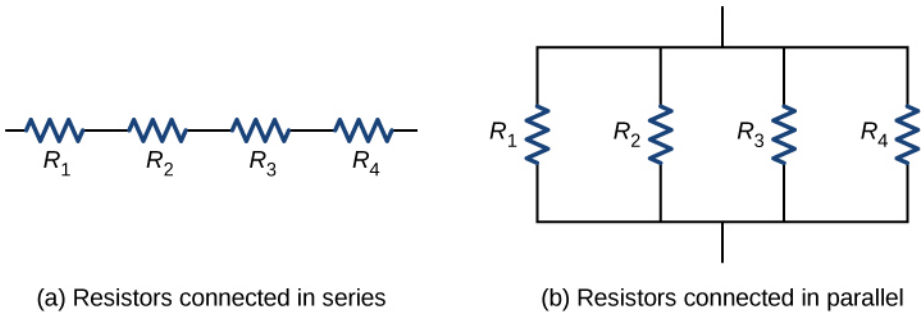

Figure 3.2: (a) For a series connection of resistors, the current is the same in each resistor. (b) For a parallel connection of resistors, the voltage is the same across each resistor.

series

resistors are in series when the current flow through them sequentially.

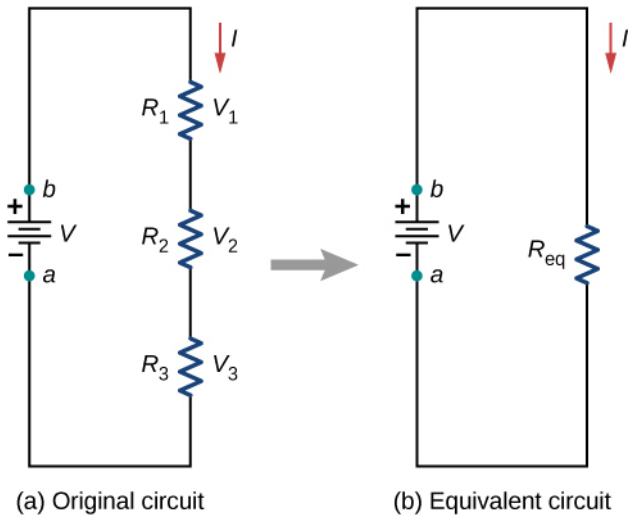

Figure 3.3: (a) Three resistors connected in series to a voltage source. (b) The original circuit is reduced to an equivalent resistance and a voltage source.

formulas $\rightarrow \quad R_{eq} = R_1 + R_2 + R_3 = \sum_{i=1}^{n} R_i$

parallel

Resistors are in parallel when one end of all the resistors are connected by a continuous wire of negligible resistance and the other end of all the resistors are also connected to one another through a continuous wire of negligible resistance. The potential drop across each resistor is the same. Current through each resistor can be found using Ohm's law I=V/R, where the voltage is constant across each resistor.

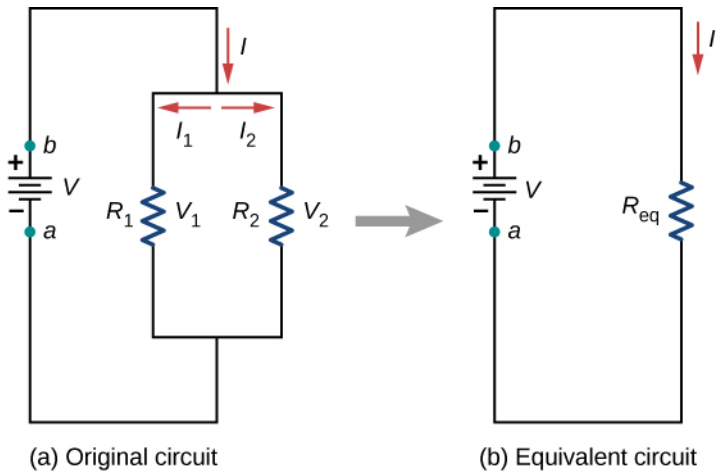

Figure 3.4: (a) Two resistors connected in parallel to a voltage source. (b) The original circuit is reduced to an equivalent resistance and a voltage source.

formulas $\rightarrow$ $R_{eq} = \left(\frac{1}{R_1} + \frac{1}{R_2}\right)^{-1} = \left(\sum_{i=1}^{n} \frac{1}{R_i}\right)^{-1}$

3.6 condensatore - capacitor

def $\rightarrow$ device that stores electrical energy by accumulating electric charges on two closely spaces surfaces that are insulated from each other. it is the equivalent of a dam (diga) in the hydraulic analogy. ha una threshold di tensione massima in volt. la capacita e l abilita di un oggetto di immagazinare carica elettrica.

3.6.1 series and parallel

series

$$C_{eq} = \left(\sum_{i=1}^{n} \frac{1}{C_i}\right)^{-1}$$

parallel

$$C_{eq} = \sum_{i=1}^{n} C_i$$

NOTE THAT IS THE OPPOSITE OF RESISTORS

3.6.2 questions

Perché talvolta si collega un condensatore in parallelo ai contatti di un pulsante?

Un interruttore, così come un microswitch, lo scambio di un relè o più in generale un qualsiasi contatto meccanico sono detti "sporchi". Questo perché quando avviene la commutazione (sia in apertura che in chiusura) la variazione di tensione prodotta non è netta ma affetta da una moltitudine di disturbi causati dalla non perfetta aderenza delle parti meccaniche che realizzano il contatto. Questi disturbi si traducono elettricamente in picchi e

vuoti di tensione che per il primo istante della commutazione (circa 50 ms) generano un segnale dall' andamento imprevedibile.

Per eliminare tale problema si può ricorrere all' uso di un condensatore in parallelo ai contatti , tale componente avrà il compito di assorbire le "impurità" dal segnale generato rendendolo pulito.

3.7 circuito rc

def → un circuito rc e un circuito elettrico del primo ordine basato su un resistore e su un condensatore.
$\tau \rightarrow$ time required for the voltage to fall to $\frac{V_0}{e}$.

$$\tau = R \cdot C$$

PAY ATTENTION TO TIME UNITS. TIP USE 10^X NOTATION WHEN DOING MULTIPLICATION

dopo $5 \cdot \tau$ il condensatore e scarico/carico.

3.7.1 questions

A che cosa serve una rete RC formata da una resistenza e un condensatore in serie.

Se viene preso l output agli estremi del condensatore vengono attenuate le frequenze alte, cioe low-pass filter. Se viene preso l output agli estremi del resistore vengono attenuate le frequenze basse, cioe high-pass filter.

3.8 potentiometer

def → three terminal resistor with a sliding or rotating contact that forms an adjustable voltage divider.

21. Un potenziometro è collegato a +5V :

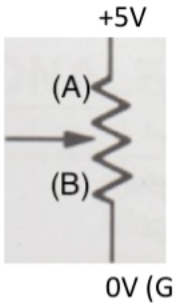

Calcolare la tensione presente sul cursore rispetto a GND quando il cursore è posizionato a in (A) e in (B), dove (A) è a ¼ del potenziometro e (B) è a ¾ .

22. Un potenziometro è collegato a +5V :

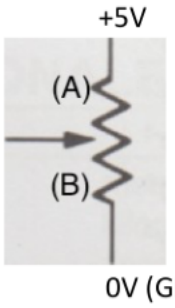

Si vuole ottenere una tensione di 4 V tra il cursore e massa (GND). Il potenziometro andrà messo in (A) o in (B) ?

Figure 3.5: es

$$C = \text{cursor_position_ratio}$$
$$V_{out} = V_{in} \cdot C$$

3.9 leds

def → semiconductor device that emits light when current flows through it.

3.9.1 questions

27. Un diodo LED rosso (VF = 1.8 V) viene collegato a un pin di Arduino alimentato a 3.3 V. Immaginando una corrente di 10 mA, calcolare la resistenza serie.

$$R = \frac{\Delta V}{I} = \frac{V_{in} - V_F}{I} = \frac{3.3V - 1.8V}{10mA} = \frac{1.5V}{10 \cdot 10^{-3} A} = 150\Omega$$

`https://www.build-electronic-circuits.com/how-to-find-voltage-and-current-of-led/`

3.10 opto isolator

def → electronic component that transfers electrical signals between two isolated circuits by using light.

3.10.1 questions

34. A cosa serve utilizzare un optoisolatore collegato a un pin di uscita digitale di un microcontrollore? a isolare arduino da un circuito con voltaggio maggiore, per evitare di friggere il microcontrollore.

3.11 transistors

def → semiconductor device used to amplify or switch electrical signals and power. a voltage or current applied to one pair of the transistor's terminals controls the current through another pair of terminals.

3.11.1 Bipolar Junction Transistor

pin names → base collector emitter

hFE → rapporto tra la corrente diretta (I) del collector e tra la corrente diretta (I) della base nella forward active region.

3.11.2 Field Effect Transistor

pin names → source gain drain

3.12 circuits

3.12.1 questions

33. Come fare a collegare un carico di potenza (es. una lampada a 24 V 2 A) ad un microcontrollore? To control devices, such as motors, lamps, coffee makers, toasters, etc. that require more voltage and/or current than can be handled directly by the Arduino pins, we need to place a device between the Arduino and those higher requirement devices. Three popular "in-between" devices that allow us to control relatively high voltage and/or current with relatively low voltage and current are relays designed for Arduinos, and two transistors: BJT and MOSFETS. **TL;DR Relays, transistor BJT e transistor MOSFETS**

3.13 misc

3.13.1 sinking and sourcing

def → Current sourcing and sinking refers to the way that an external load is connected to a circuit, system, microcontroller or other electronic device.
When a load is connected to a device so that the device supplies current to the load (sources current) then the configuration is said to be current sourcing.
When a load is connected to a device so that current flows from the power supply through the load and into the device, then the configuration is said to be current sinking. When current flows into the device, it is said to be sinking current.

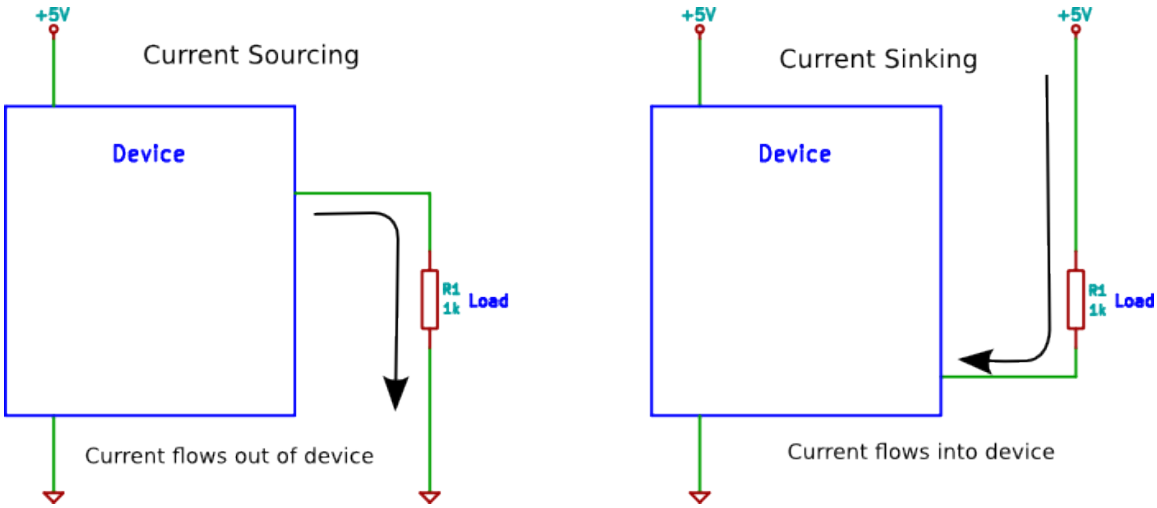

Figure 3.6: sourcin and sinkin

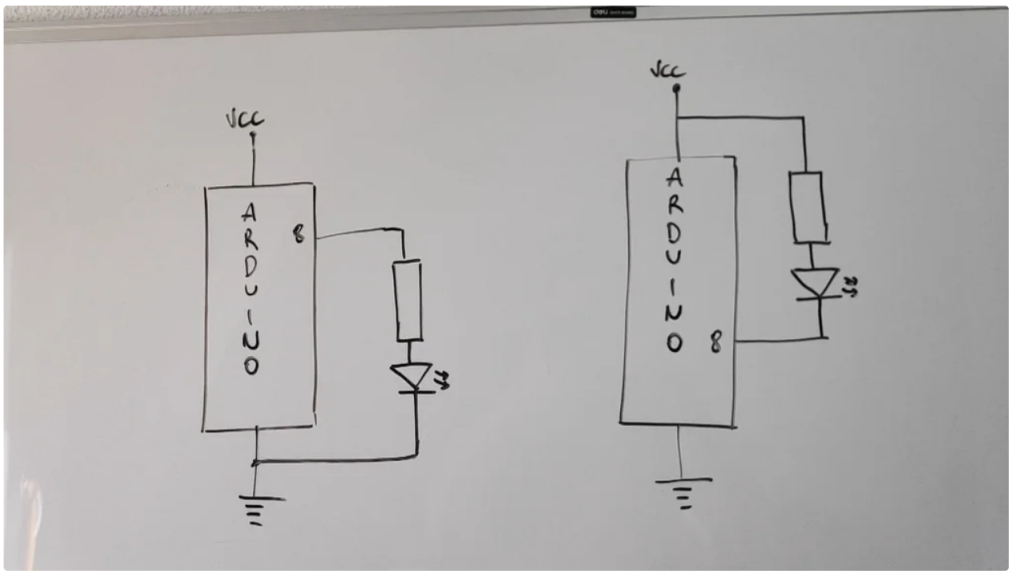

Figure 3.7: sourcin and sinkin

3.14 questions

- 35. Cosa si intende per "debouncing" (o antirimbalzo) di un interruttore collegato a un ingresso digitale? Per bouncing si intende il rimbalzo al momento di switch tra i due contatti di un interrutore che provoca differenze di tensione imprevedibili in un circuito. Per debouncing si intende mitigare questo effetto e si puo farlo con un condensatore collegato in parallelo ai contatti del pulsante.

- 36. Perché bisogna usare un transistor per pilotare un relè da parte di un pin I/O di un microcontrollore? The average microcontroller like on your Arduino has only limited 'strength' on the port pins. Typically it might be 2..20mA. Your relay might require 60mA at a guess so you require some means of amplifying the port pin. A transistor or mosfet is commonly used.

- 37. Nel circuito allegato, a cosa serve il diodo collegato in parallelo alla bobina del relè?
  When a small voltage typically above 0.6V is applied across the base emitter junction of the transistor, it enters into an active state. This activation is crucial as it enables the transistor to conduct current between its collector and emitter terminals. The activated transistor serves as a switch for the relay. With the transistor conducting current flows through the relay coil. The magnetic field generated by this current causes the relays internal switch to close allowing a larger load to be connected or disconnected. Upon deactivation of the relay or when the input voltage is removed a back electromotive force EMF is generated across the relay coil. The freewheeling diode connected in parallel with the relay coil provides a path for this back EMF to circulate preventing it from damaging the transistor. Essentially, it ensures a safe discharge path for the stored energy in the relay coil. The base resistor is introduced to control the current flowing into the base of the transistor. Proper base current is essential to keep the transistor in its active region without overloading it. This information is critical for sizing components and ensuring the relay operates within its specified parameters. **TL;DR Il diodo server per non danneggiare il transistor con i campi elettromagnetici generati dall'utilizzatore.**

- 39. Come è fatto un diodo a semiconduttore e a cosa serve.
  Un diodo a semiconduttore e formato da una giunzione p-n connessa a due terminali elettrici (la maggior parte dei diodi e fatta di silicone). Serve a far circolare la corrente in una sola direzione.

- 41. Come e fatto un transistor BJT? Un transistor BJT e formato da due giunzioni p-n e usa sia gli elettroni che gli electron holes come portatori di carica. Le pn junctions possono essere di tipo PNP oppure di tipo NPN.

- 42. Devo usare un BJT per controllare un carico di potenza. Perché devo andare a guardare e valutare il guadagno (hFE) del transistor? Se il guadagno del transistor e troppo basso il carico di potenza non funziona e se invece e troppo alto rischio di danneggiare il componente.

Chapter 4

protocols

- 1 WIRE PROTOCOL:
  def → wired half-duplex serial bus designed by Dallas Semiconductor that provides low-speed (16.3 kbit/s) data communication and supply voltage over a single conductor.
  - wired → on a physical cable
  - half-uplex → only a device at a time can send data
  - serial → data is transmitted one bit a time
  - bus → communication system that encompasses both hardware (wires) and software (communication protocol)
- components
  - bus master with controlling software (a "server")
  - wiring
  - devices

Chapter 5

sources

- https://phys.libretexts.org/Bookshelves/University_Physics/University_Physics_(OpenStax)/University_Physics_II_-_Thermodynamics_Electricity_and_Magnetism_(OpenStax)/10%3A_Direct-Current_Circuits/10.03%3A_Resistors_in_Series_and_Parallel