Lab 11

Op-Amp Circuits, Design and Limitations

Student Name: Sean Balbale
Instructor: Dr. Iman Salama
Lab Partner Name: Krish Gupta
Date: November 19, 2024

1 Introduction

Operational amplifiers (op-amps) serve as fundamental components in numerous sensing and measurement applications, particularly in the amplification and filtering of signals. In biomedical contexts, such as ECG signal acquisition, op-amps are critical for enhancing small signal magnitudes, rejecting common-mode signals, and filtering out extraneous noise at high and low frequencies. This laboratory exercise investigated an active high-pass filter configuration utilizing the LT1490 operational amplifier. This setup aimed to replicate prior theoretical analysis performed in LTSpice by assembling and testing an active filter to observe its in-band gain, time constant, cutoff frequency, and response characteristics. By constructing this high-pass filter circuit, the lab provided an opportunity to evaluate practical op-amp applications and assess discrepancies between theoretical and experimental data, particularly in the filter's performance across varying frequencies.

2 Results

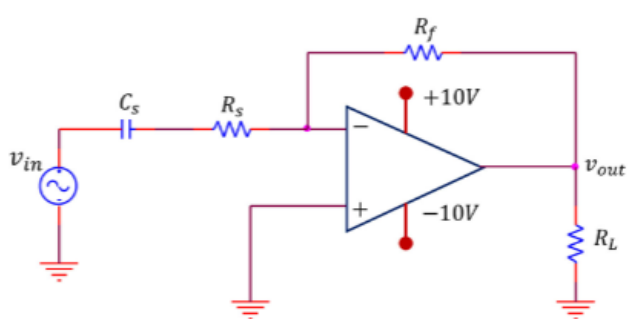

Figure 1: First Order Active High Pass Filter

The active high-pass filter circuit was constructed as shown in Figure 1. It used an LT1490 operational amplifier with three resistors and one capacitor. The resistor values were $R_s = 98.1\ k\Omega$, $R_f = 198.6\ k\Omega$, and $R_L = 9.85\ k\Omega$. The capacitor value was $C_s = 10.9$ nF. The circuit was assembled on a breadboard and connected to a function generator and oscilloscope (Figure 2).

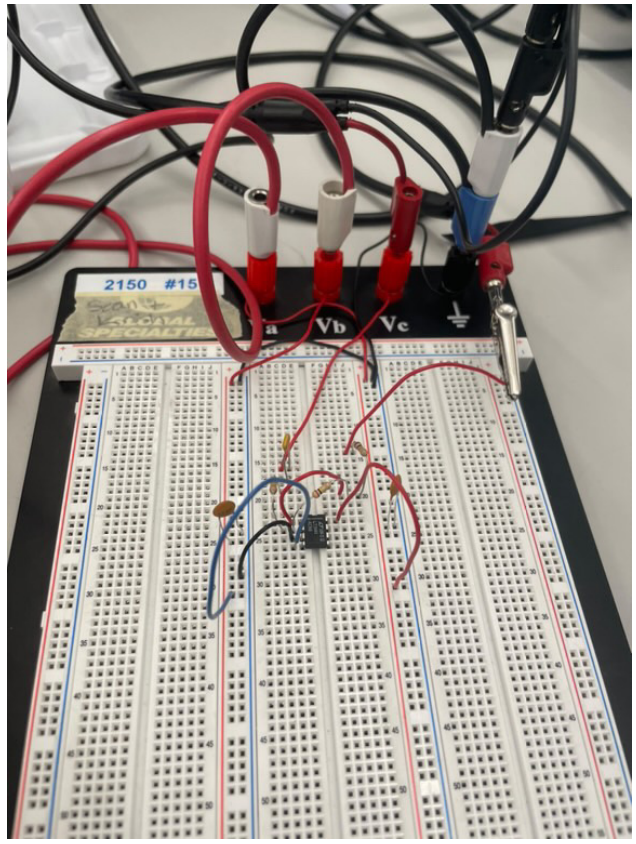

Figure 2: High Pass Filter on Breadboard

The theoretical in-band gain of the high-pass filter ($H(\omega)$) was calculated using the following equation:

$$H(\omega) = \frac{R_f}{R_s} = \frac{198.6k\Omega}{98.1k\Omega} = 2.02$$

The cutoff frequency of the high-pass filter (f_c) was calculated using the following equation:

$$f_c = \frac{1}{2\pi R_s C_s} = \frac{1}{2\pi \cdot 98.1k\Omega \cdot 10.9nF} = 148.8 \text{ Hz}$$

The time constant of the high-pass filter (τ) was calculated using the following equation:

$$\tau = \frac{1}{2\pi f_c} = \frac{1}{2\pi \cdot 148.8Hz} = 1.07 \text{ ms}$$

Finally, the cuttoff angular frequency of the high-pass filter (ω_c) was calculated using the following equation:

$$\omega_c = 2\pi f_c = 2\pi \cdot 148.8 \text{ Hz} = 935.5 \text{ rad/s}$$

The function generator was configured to produce a sine wave with an amplitude of 0.2V peak to peak with a frequency of of 5 kHz. The oscilloscope was connected to the output of the high-pass filter to measure the input and output signals. The input voltage was measured

to be 221 mV peak to peak and the output voltage was measured to be 440 mV peak to peak. The in-band gain was calculated to be:

$$H(\omega) = \frac{V_{out}}{V_{in}} = \frac{440mV}{221mV} = 1.991 \approx 2.02$$

The transfer function of the circuit was measured by varying the frequency of the input signal and measuring the output signal. The results are shown in Table 1.

f_c (Hz)	gain
10	0.25
100	1.11
1000	2
10000	2.09
100000	0.63
1000000	0.145
10000000	0.145

Table 1: Transfer Function of High Pass Filter

The transfer function was plotted on a Bode plot (Figure 3).

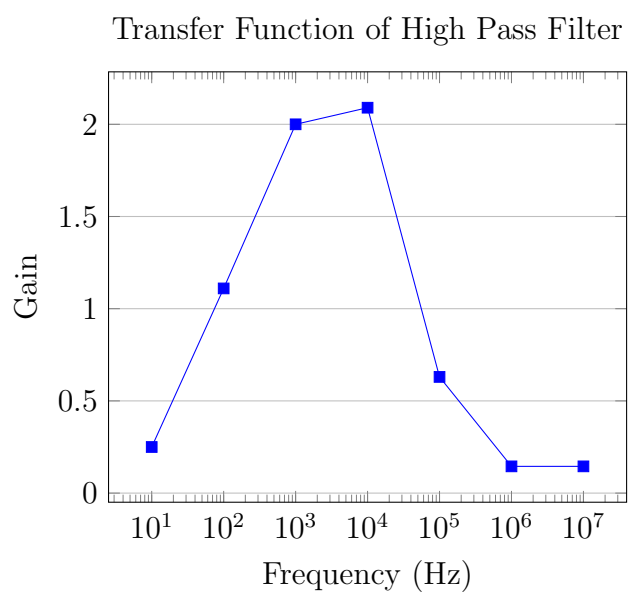

Figure 3: Transfer Function of High Pass Filter

The gain gets smaller at higher frequencies, which is expected for a high-pass filter. This is because the op-amp has a limited bandwidth and cannot amplify signals at high frequencies.

Now the circuit is connected to a funciton generator that produces a square wave with a frequency of 50 Hz and amplitude of 0.5 V. The output signal can be seen in Figure 4.

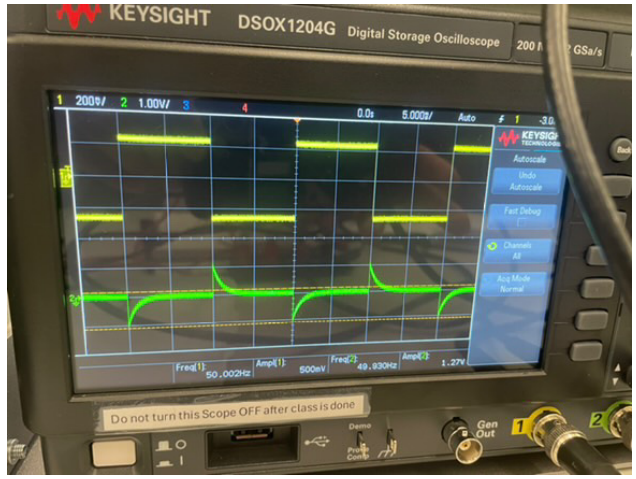

Figure 4: Square Wave Output 50 Hz Input

The weird shape of the output signal in Figure 4 is due to the fact that the capacitor in the high-pass filter is charging and discharging. This causes the output signal to have a slow rise and fall time. When the frequency of the input signal is increased to 2 kHz, the output signal can be seen in Figure 5.

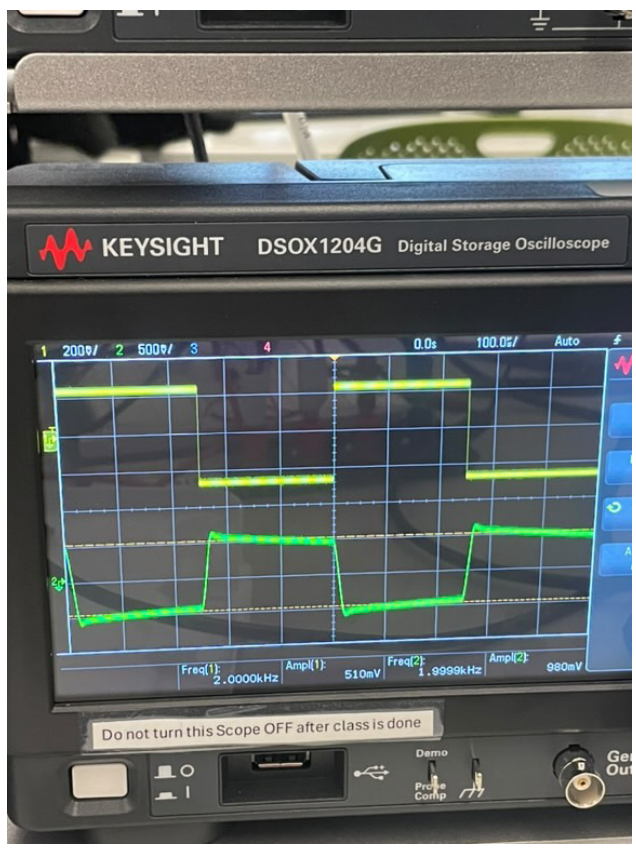

Figure 5: Square Wave Output 2 kHz Input

Here, the output signal is a square wave with a faster rise and fall time. Thus it looks closer to a square wave than the output signal in Figure 4.

3 Discussion and Conclusion

The experiment successfully demonstrated the design, assembly, and testing of an active high-pass filter using an LT1490 operational amplifier. The high-pass filter achieved the expected frequency-dependent behavior, with a measured in-band gain and cutoff frequency that closely matched theoretical calculations. The cutoff frequency was calculated to be approximately 148.8 Hz, and experimental measurements supported this value, with a clear gain reduction observed beyond the cutoff point.

Results from the Bode plot showed that the filter maintained a consistent gain in the passband while gradually attenuating signals as frequencies approached and exceeded the cutoff. At higher frequencies, gain decreased further due to the op-amp's finite bandwidth, an expected limitation for this component.

The filter's response to square wave inputs at different frequencies illustrated its behavior in the time domain, where the capacitor charging and discharging caused distinctive waveshaping effects. At low frequencies, the output signal exhibited rounded edges, whereas, at higher frequencies, the output signal retained a more defined square shape. This outcome aligns with high-pass filter principles, as the circuit more effectively transmitted higher-frequency components.

In conclusion, the lab provided hands-on insight into op-amp-based filter design, confirming theoretical expectations and highlighting practical considerations such as component tolerances and frequency limitations of the op-amp. The results affirm the utility of high-pass filters in applications that require selective attenuation of low-frequency noise, such as biomedical signal processing.

4 References

[1] Dr. Iman Salama. "Lab 11 – Op-Amp Circuits, Design and Limitations" Northeastern University. 11 November 2024.