GuSynth — A Polyphonic Guitar Synthesizer Pedal

Design Schematic

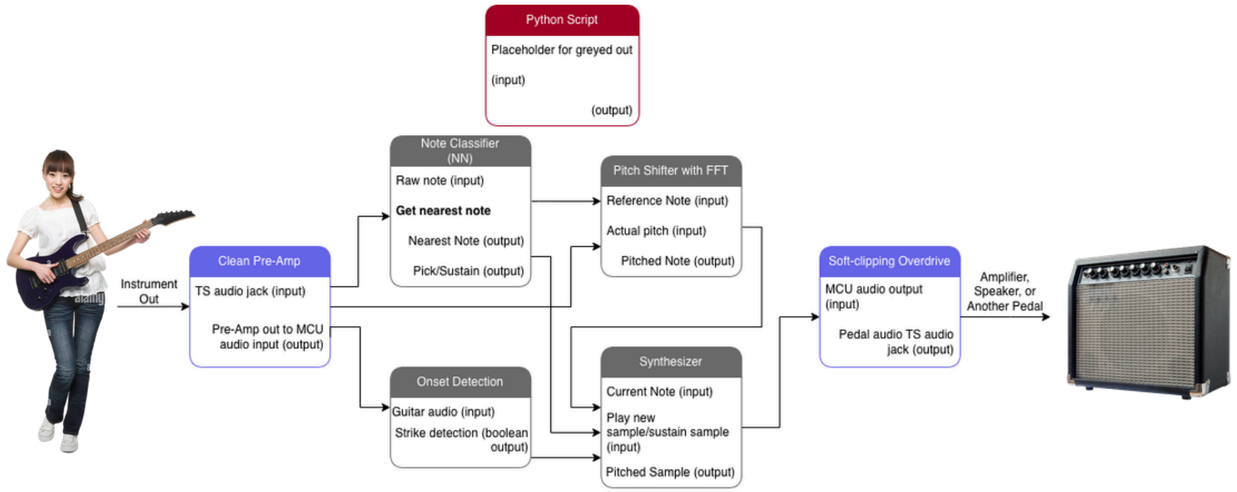

Physical Interface Layout

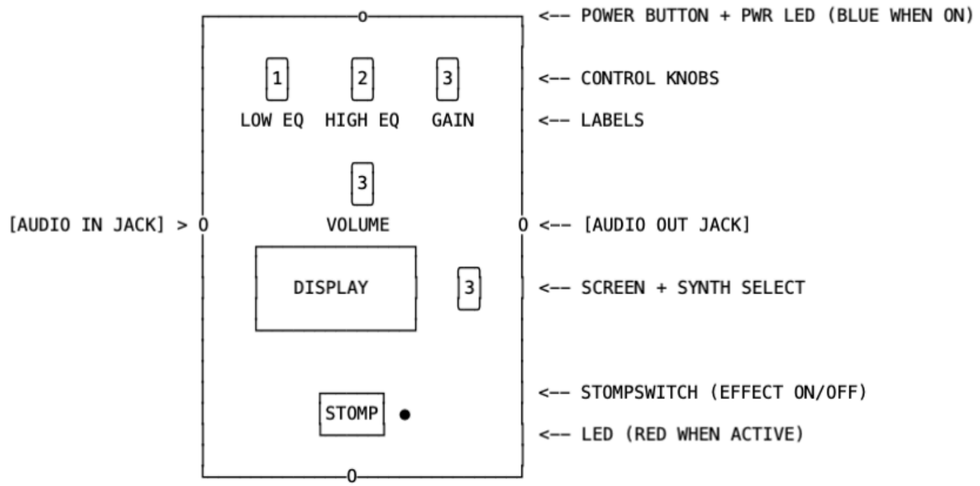

Signal Path

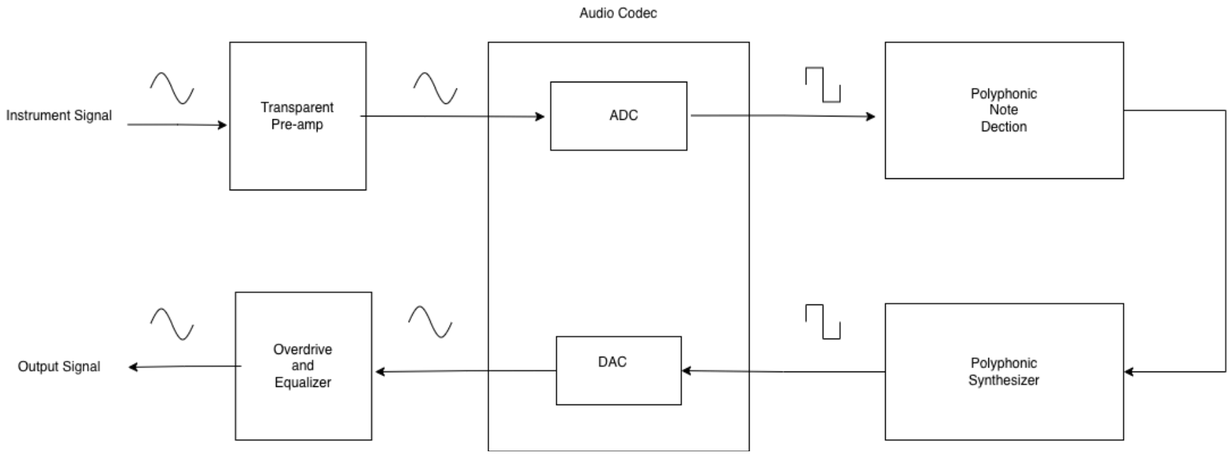
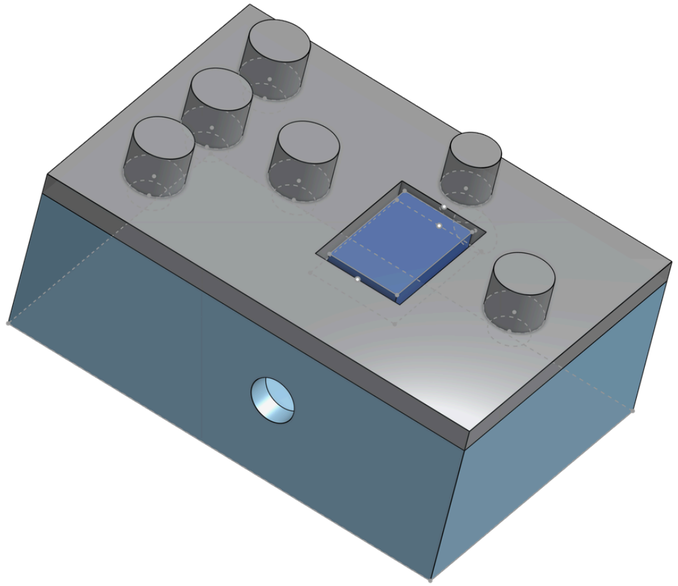
Aesthetic Prototype