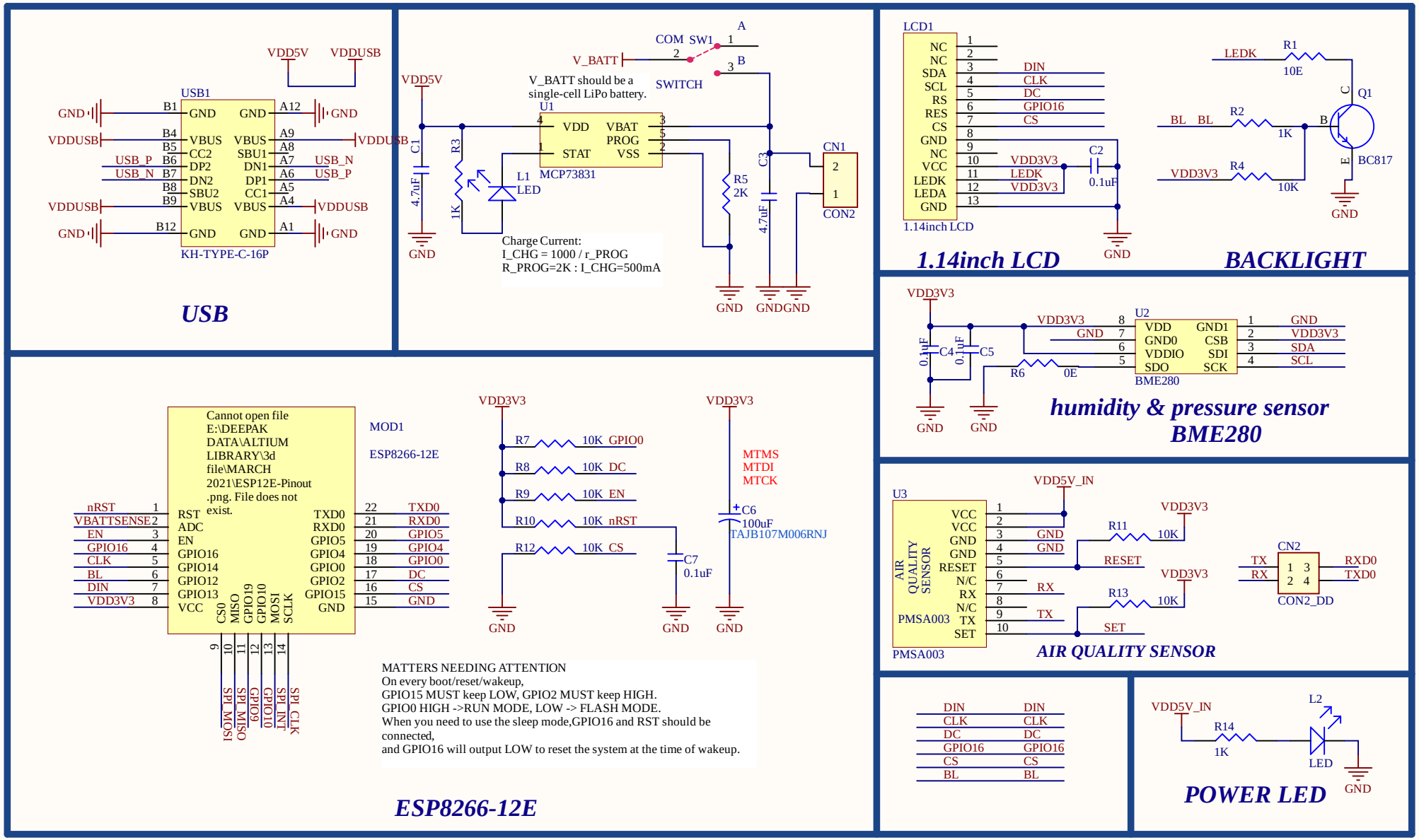

AIRYFI			
Size: A4	Revision: V2.1	Sheet: 1/2	SB Component Ltd. Kemp House, 152-160, London EC1V 2NX.
Date: 16-11-2022	Time: 14:18:00	DrawnBy:	

Cannot open file C:\Users\DEEPAK\Downloads\SB logo.png. File does not

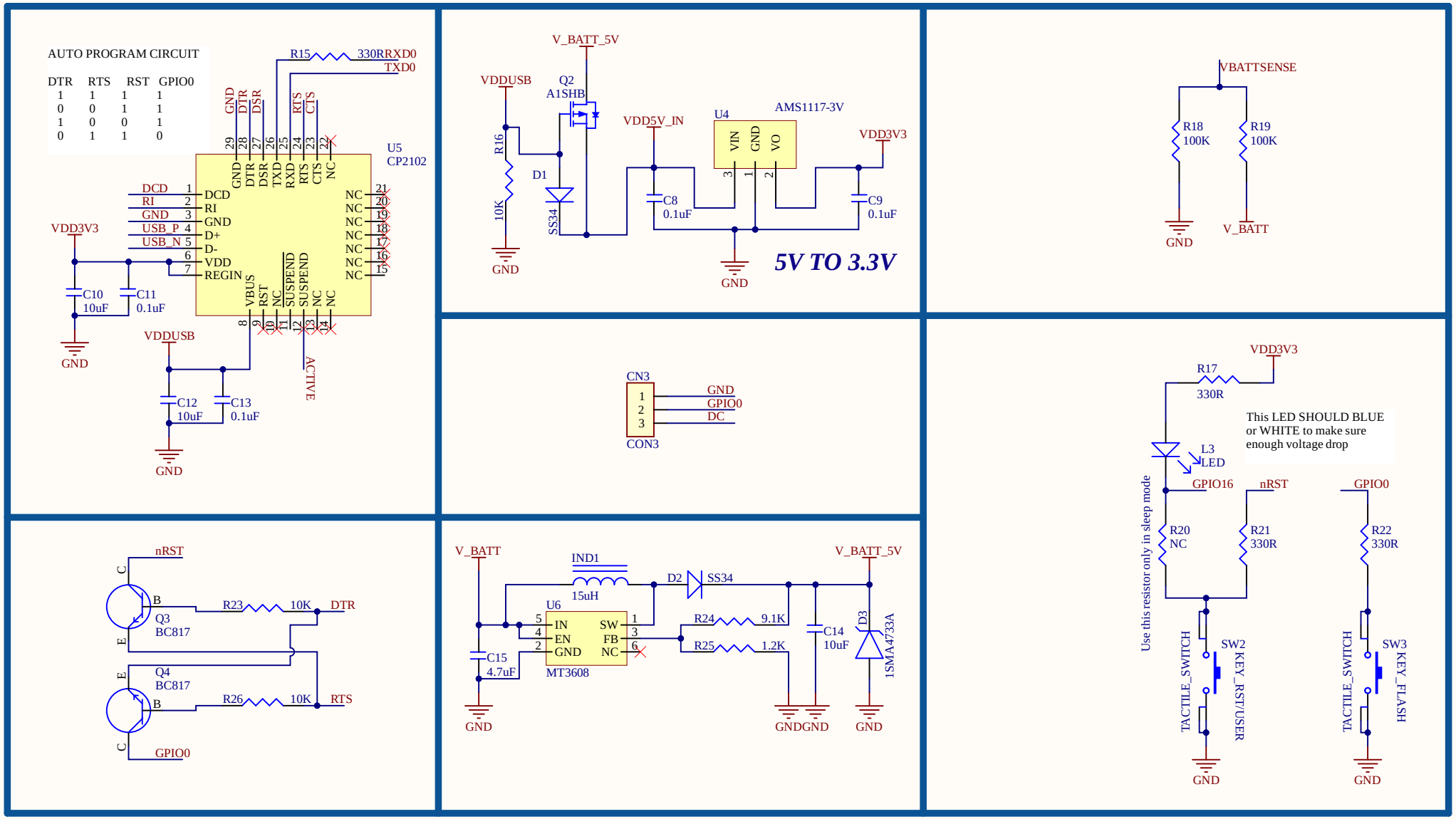

AIRYFI				
Size: A4	Revision: **V2.1**	Sheet: **2/2**	*SB Component Ltd.*	Cannot open file C:\Users\DEEPAK\Downloads\SB logo.png. File does not
Date: 16-11-2022	Time: 14:18:01	DrawnBy:	*Kemp House, 152-160, London EC1V 2NX.*	