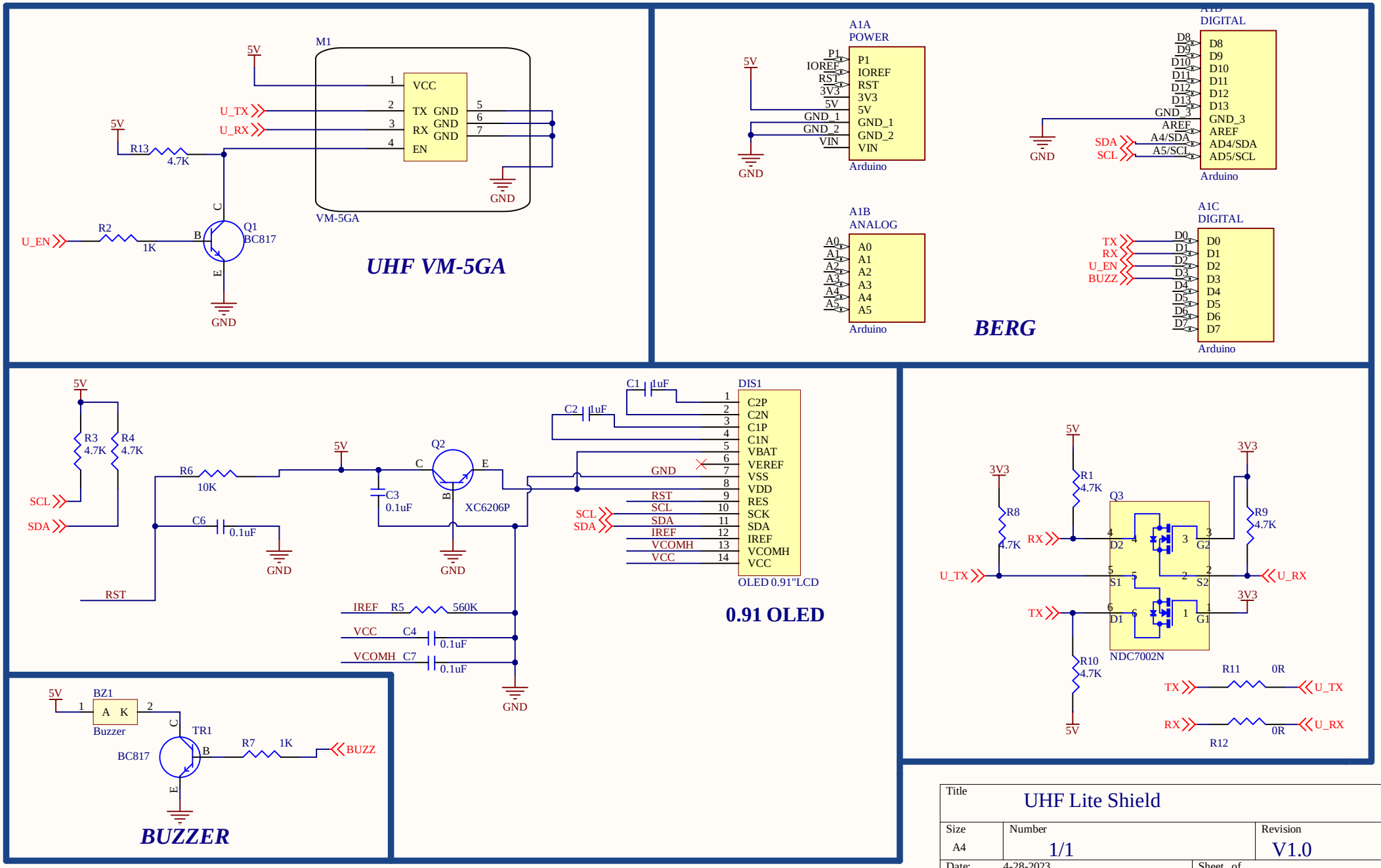

Title	UHF Lite Shield	
Size A4	Number 1/1	Revision V1.0
Date: 4-28-2023		Sheet of
File: E:\RUBY_SB\..\Sheet2.SchDoc		Drawn By: