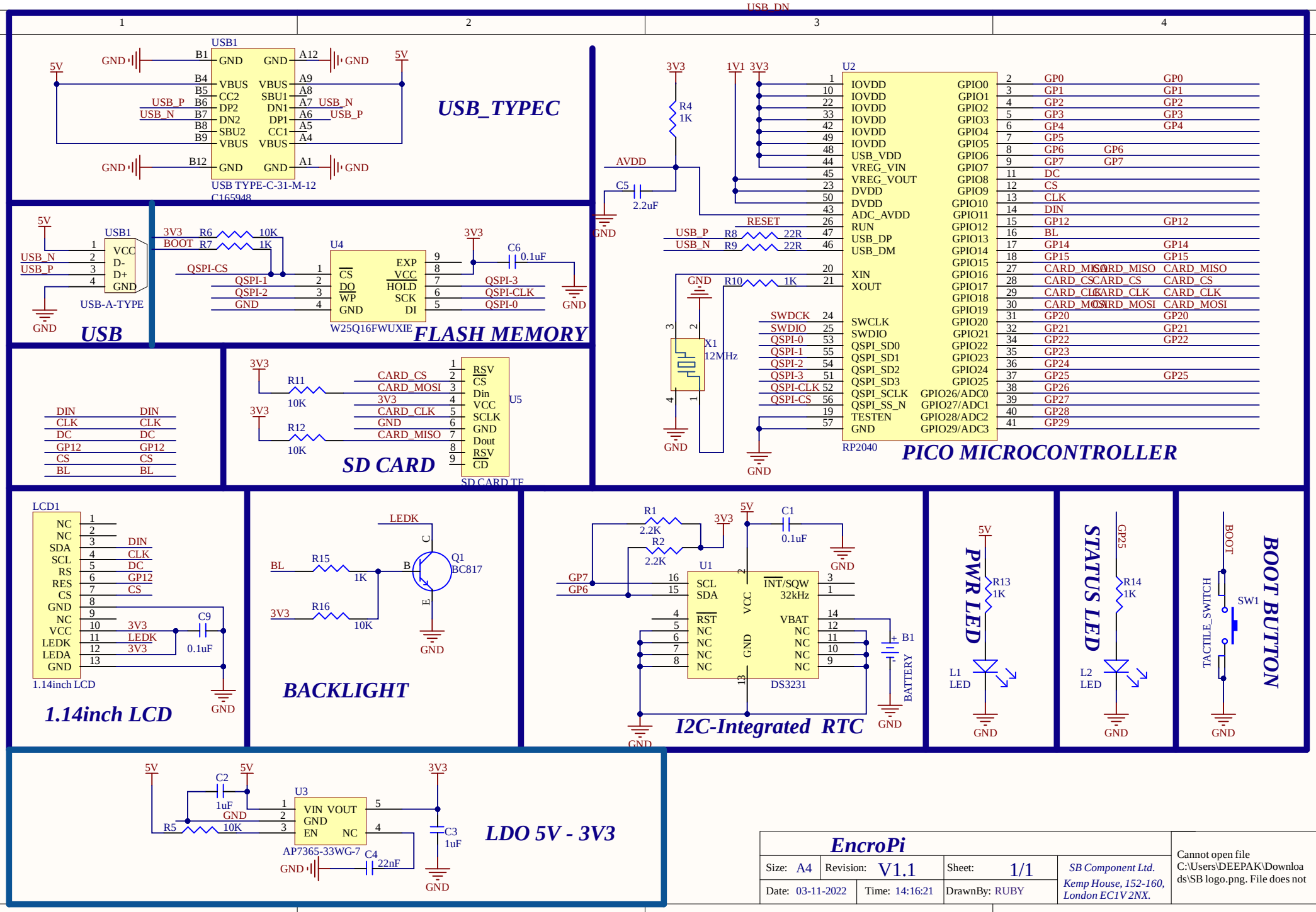
USB_TYPEC
USB1
USB TYPE-C-31-M-12
C165948
USB
USB-A-TYPE
FLASH MEMORY
W25Q16FWUXIE
U4
SD CARD
SD CARD TF
U5
PICO MICROCONTROLLER
U2
RP2040
1.14inch LCD
LCD1
BACKLIGHT
Q1
BC817
I2C-Integrated RTC
U1
DS3231
BATTERY
PWR LED
STATUS LED
BOOT BUTTON
TACTILE_SWITCH
LDO 5V - 3V3
U3
AP7365-33WG-7
EncroPi
Size: A4
Revision: V1.1
Sheet: 1/1
Date: 03-11-2022
Time: 14:16:21
DrawnBy: RUBY
SB Component Ltd.
Kemp House, 152-160,
London EC1V 2NX.
Cannot open file C:\Users\DEEPAK\Downloads\SB logo.png. File does not