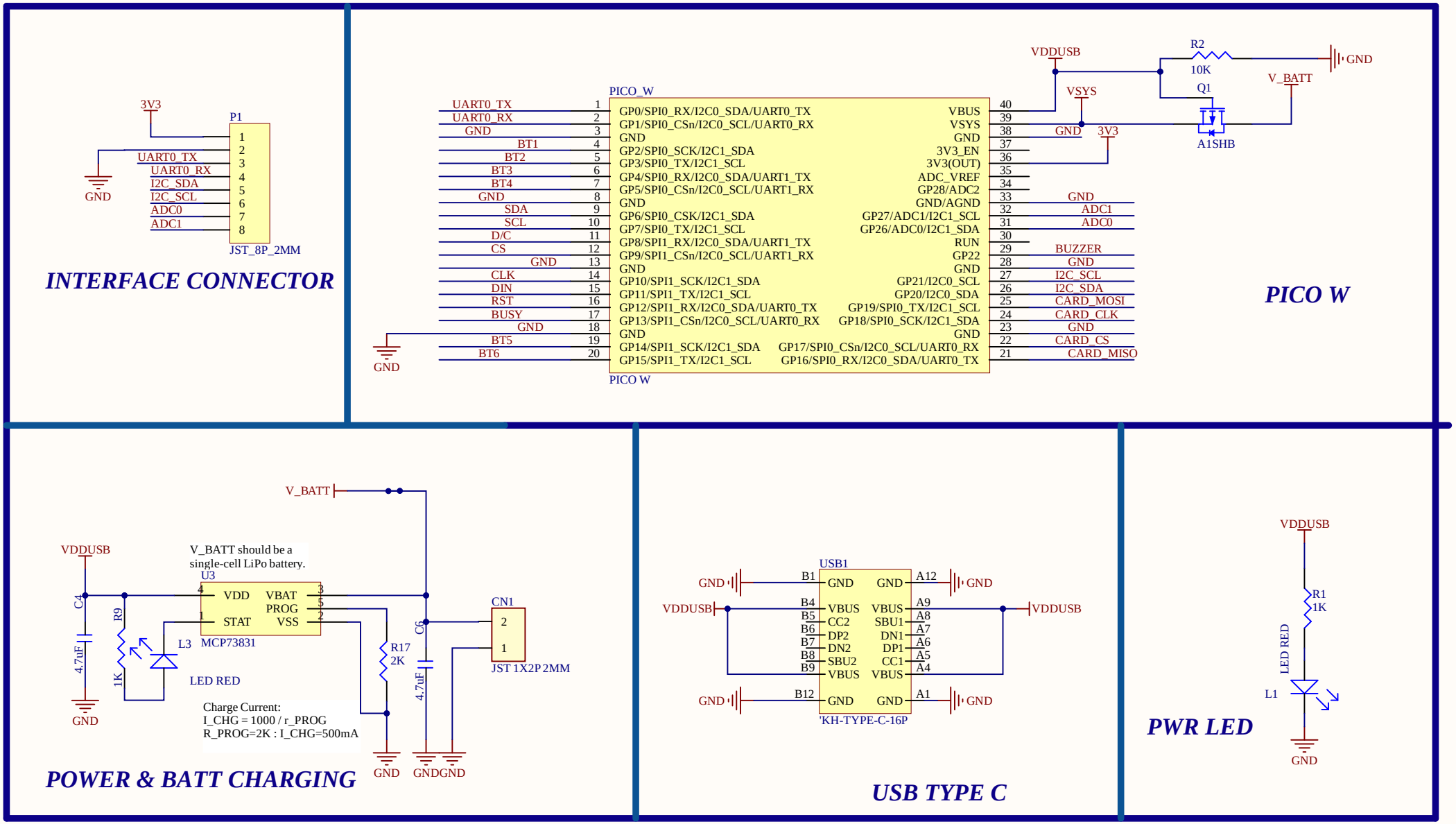

EnkPi 5.83"				
Size: A4	Revision: V1.0	Sheet: 1/2	SB Component Ltd. Kemp House, 152-160, London EC1V 2NX.	Cannot open file C:\Users\DEEPAK\Downloads\SB logo.png. File does not
Date: 24-02-2023	Time: 17:20:06	DrawnBy:		

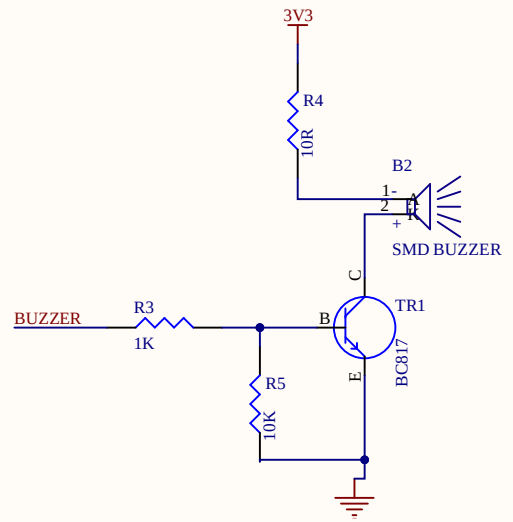

BUZZER

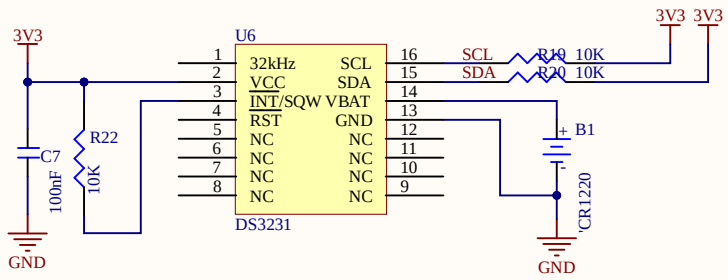

RTC

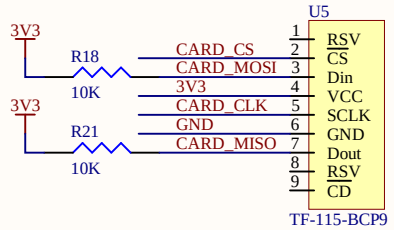

SD CARD

5.83_Inch E-Paper

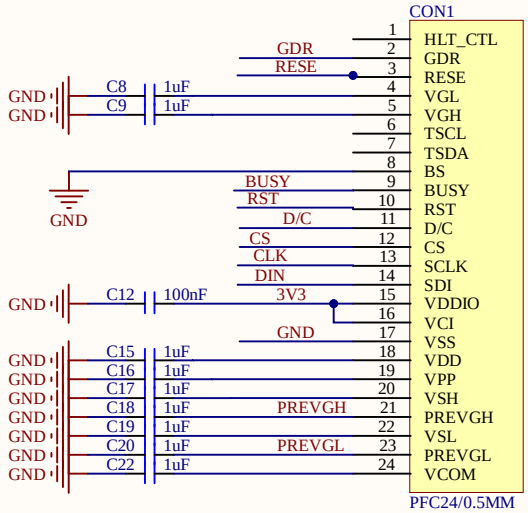

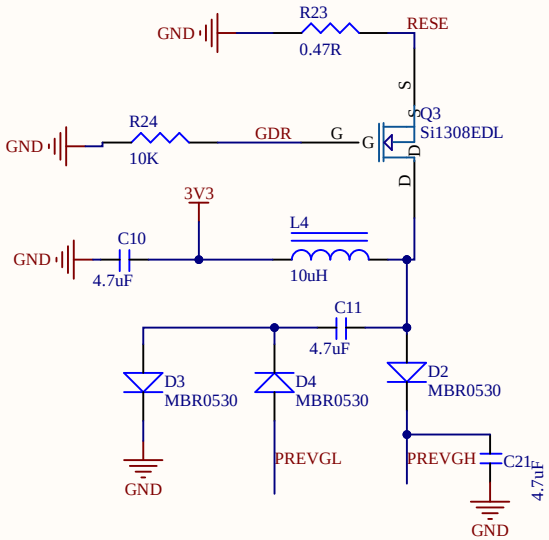

BUTTONS

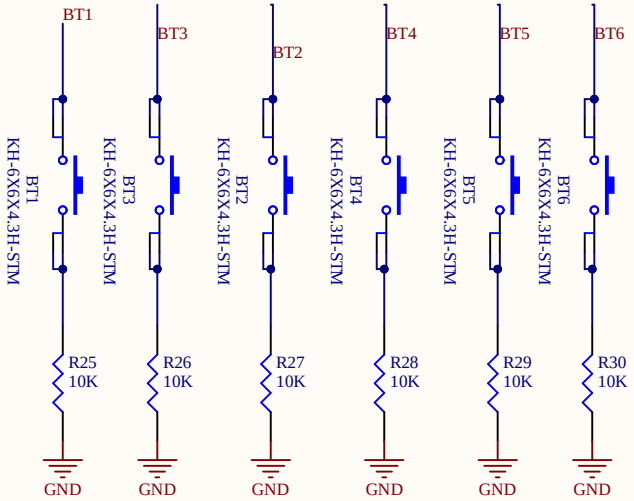

EnkPi 5.83"				Cannot open file C:\Users\DEEPAK\Downloads\SB logo.png. File does not
Size: A4	Revision: V1.0	Sheet: 2/2	*SB Component Ltd.*	
Date: 24-02-2023	Time: 17:20:06	DrawnBy:	*Kemp House, 152-160, London EC1V 2NX.*	