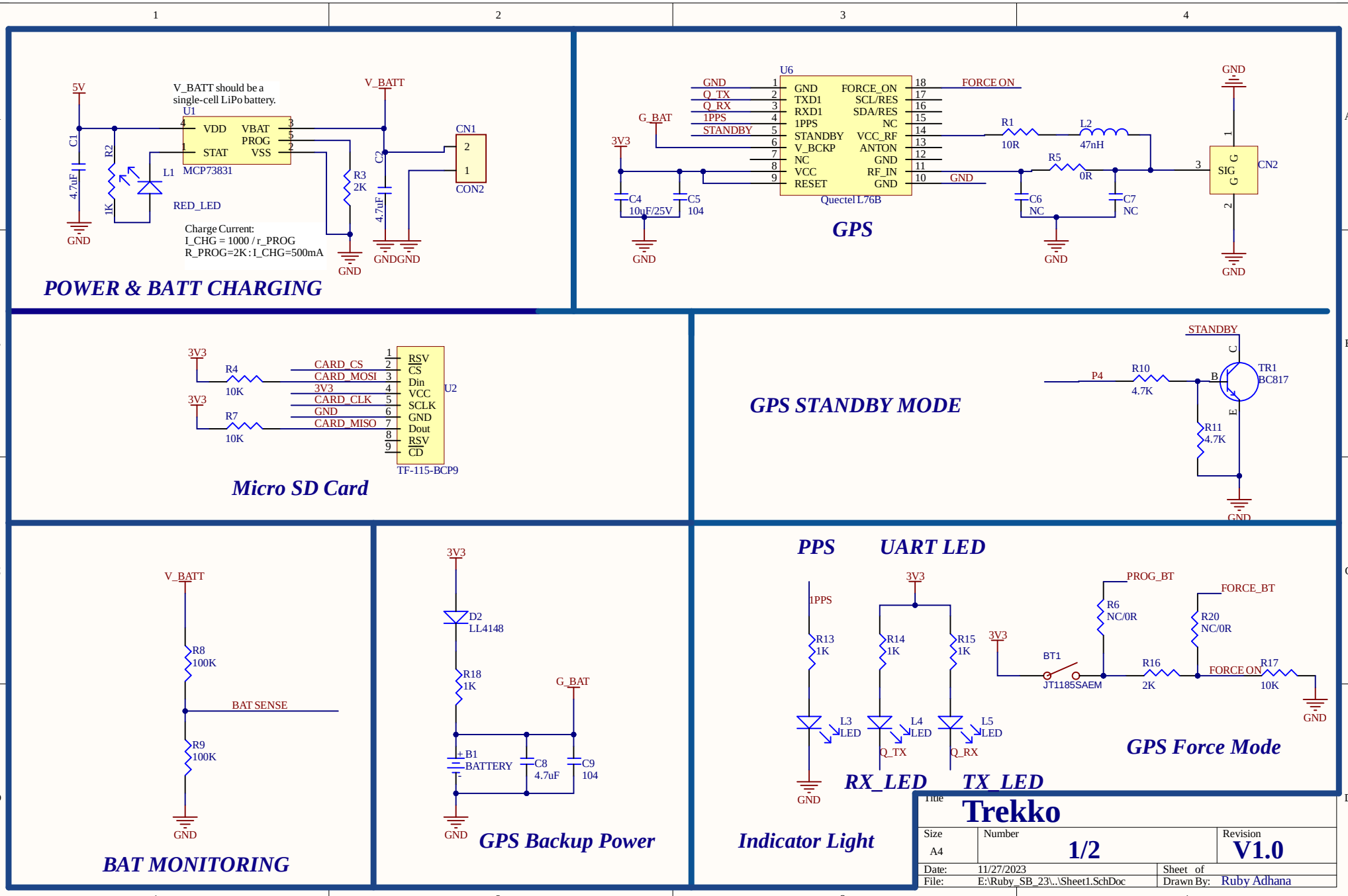
POWER & BATT CHARGING
5V
V_BATT should be a single-cell LiPo battery.
U1
VDD
VBAT
PROG
STAT
VSS
MCP73831
V_BATT
C1
4.7uF
R2
1K
L1
RED_LED
R3
2K
C2
4.7uF
CN1
CON2
GND
Charge Current:
I_CHG = 1000 / r_PROG
R_PROG=2K : I_CHG=500mA
GPS
U6
GND
Q_TX
Q_RX
1PPS
STANDBY
TXD1
RXD1
V_BCKP
NC
VCC
RESET
FORCE_ON
SCL/RES
SDA/RES
VCC_RF
ANTON
RF_IN
G_BAT
3V3
C4
10uF/25V
C5
104
Quectel L76B
FORCE ON
R1
10R
L2
47nH
R5
0R
C6
NC
C7
NC
CN2
SIG
Micro SD Card
R4
10K
R7
10K
CARD_CS
CARD_MOSI
CARD_CLK
CARD_MISO
RSV
CS
Din
VCC
SCLK
Dout
CD
U2
TF-115-BCP9
GPS STANDBY MODE
STANDBY
P4
R10
4.7K
TR1
BC817
R11
4.7K
BAT MONITORING
R8
100K
BAT SENSE
R9
100K
GPS Backup Power
D2
LL4148
R18
1K
B1
BATTERY
C8
4.7uF
C9
104
Indicator Light
PPS
UART LED
RX_LED
TX_LED
R13
1K
R14
1K
R15
1K
L3
LED
L4
LED
L5
LED
Q_TX
Q_RX
GPS Force Mode
PROG_BT
FORCE_BT
R6
NC/0R
R20
NC/0R
BT1
JT1185SAEM
R16
2K
R17
10K
Title
Trekko
Size
A4
Number
1/2
Revision
V1.0
Date:
11/27/2023
Sheet of
File:
E:\Ruby_SB_23\..\Sheet1.SchDoc
Drawn By:
Ruby Adhana

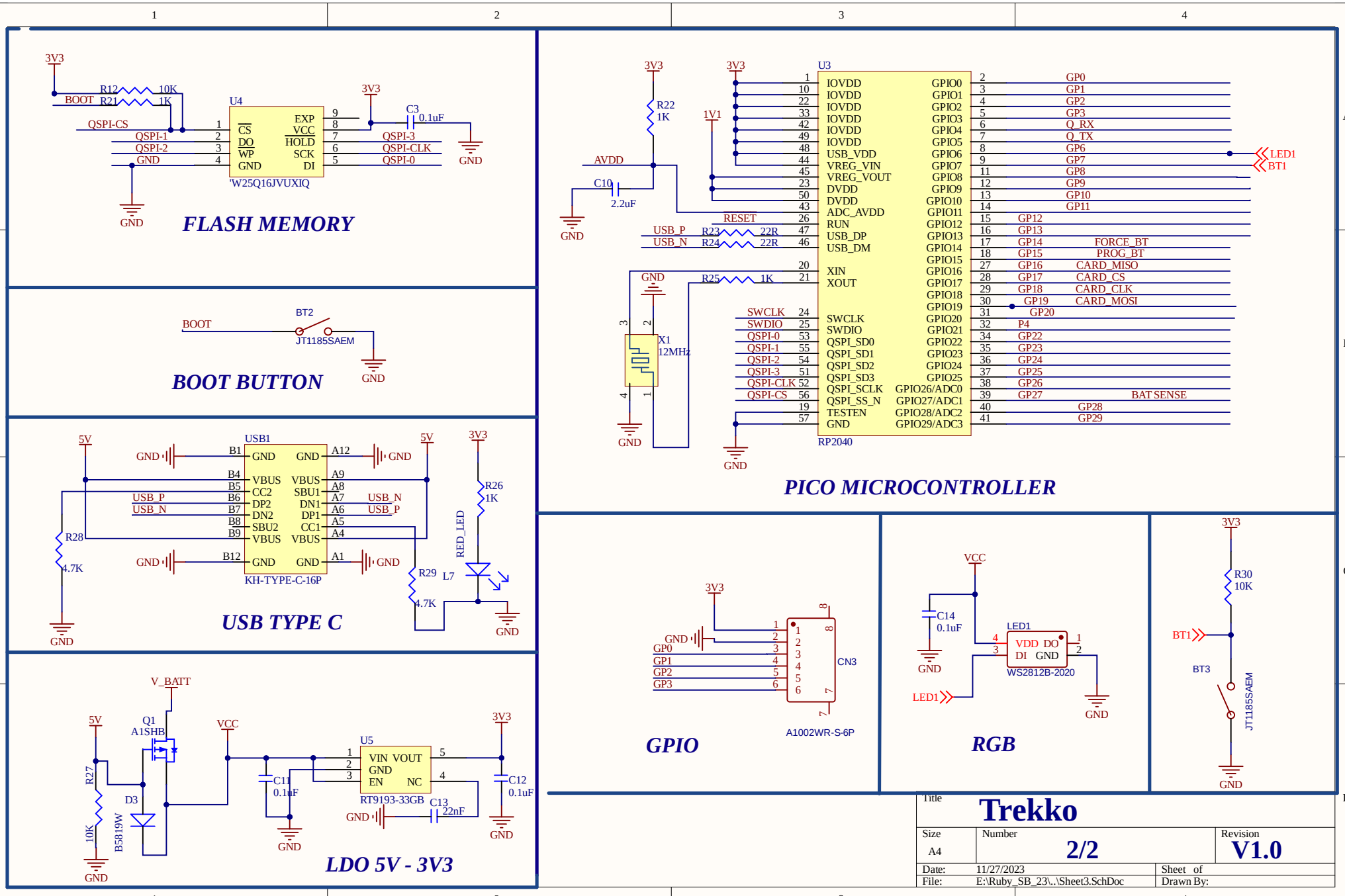
FLASH MEMORY
U4
'W25Q16JVUXIQ
3V3
R12 10K
R21 1K
BOOT
QSPI-CS
QSPI-1
QSPI-2
GND
CS
DO
WP
GND
EXP
VCC
HOLD
SCK
DI
C3 0.1uF
QSPI-3
QSPI-CLK
QSPI-0
BOOT BUTTON
BT2
JT1185SAEM
PICO MICROCONTROLLER
U3
RP2040
R22 1K
1V1
AVDD
C10 2.2uF
RESET
USB_P
USB_N
R23 22R
R24 22R
R25 1K
X1 12MHz
SWCLK
SWDIO
QSPI-0
QSPI-1
QSPI-2
QSPI-3
QSPI-CLK
QSPI-CS
IOVDD
USB_VDD
VREG_VIN
VREG_VOUT
DVDD
ADC_AVDD
RUN
USB_DP
USB_DM
XIN
XOUT
QSPI_SD0
QSPI_SD1
QSPI_SD2
QSPI_SD3
QSPI_SCLK
QSPI_SS_N
TESTEN
GPIO0
GPIO1
GPIO2
GPIO3
GPIO4
GPIO5
GPIO6
GPIO7
GPIO8
GPIO9
GPIO10
GPIO11
GPIO12
GPIO13
GPIO14
GPIO15
GPIO16
GPIO17
GPIO18
GPIO19
GPIO20
GPIO21
GPIO22
GPIO23
GPIO24
GPIO25
GPIO26/ADC0
GPIO27/ADC1
GPIO28/ADC2
GPIO29/ADC3
GP0
GP1
GP2
GP3
Q_RX
Q_TX
GP6
GP7
GP8
GP9
GP10
GP11
GP12
GP13
GP14
GP15
GP16
GP17
GP18
GP19
GP20
P4
GP22
GP23
GP24
GP25
GP26
GP27
GP28
GP29
FORCE_BT
PROG_BT
CARD_MISO
CARD_CS
CARD_CLK
CARD_MOSI
BAT SENSE
LED1
BT1
USB TYPE C
USB1
KH-TYPE-C-16P
5V
3V3
R28 4.7K
R29 4.7K
R26 1K
RED_LED
L7
GPIO
CN3
A1002WR-S-6P
RGB
VCC
C14 0.1uF
LED1
VDD DO
DI GND
WS2812B-2020
BT3
R30 10K
JT1185SAEM
LDO 5V - 3V3
V_BATT
Q1 A1SHB
R27 10K
D3 B5819W
U5
RT9193-33GB
VIN VOUT
GND
EN NC
C11 0.1uF
C12 0.1uF
C13 22nF
Title
Trekko
Size
A4
Number
2/2
Revision
V1.0
Date: 11/27/2023
Sheet of
File: E:\Ruby_SB_23\..\Sheet3.SchDoc
Drawn By: