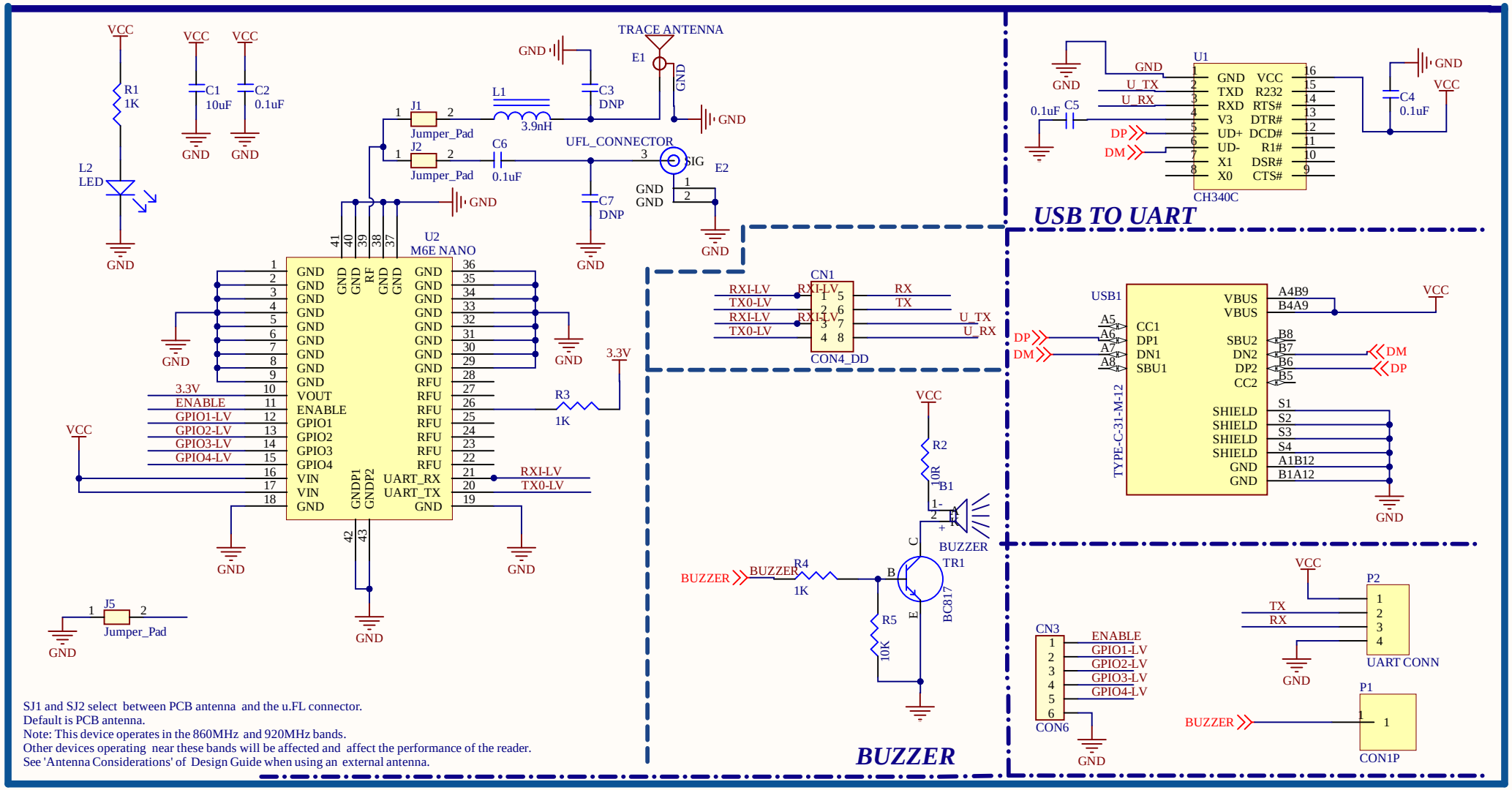

M6E NANO BREAKOUT			
Size: A4	Revision: **V1.0**	Sheet: **1/1**	*SB Component Ltd.* *Kemp House, 152-160, London EC1V 2NX.*
Date: 27-01-2023	Time: 16:01:59	DrawnBy:	

Cannot open file C:\Users\DEEPAK\Downloads\SB logo.png. File does not