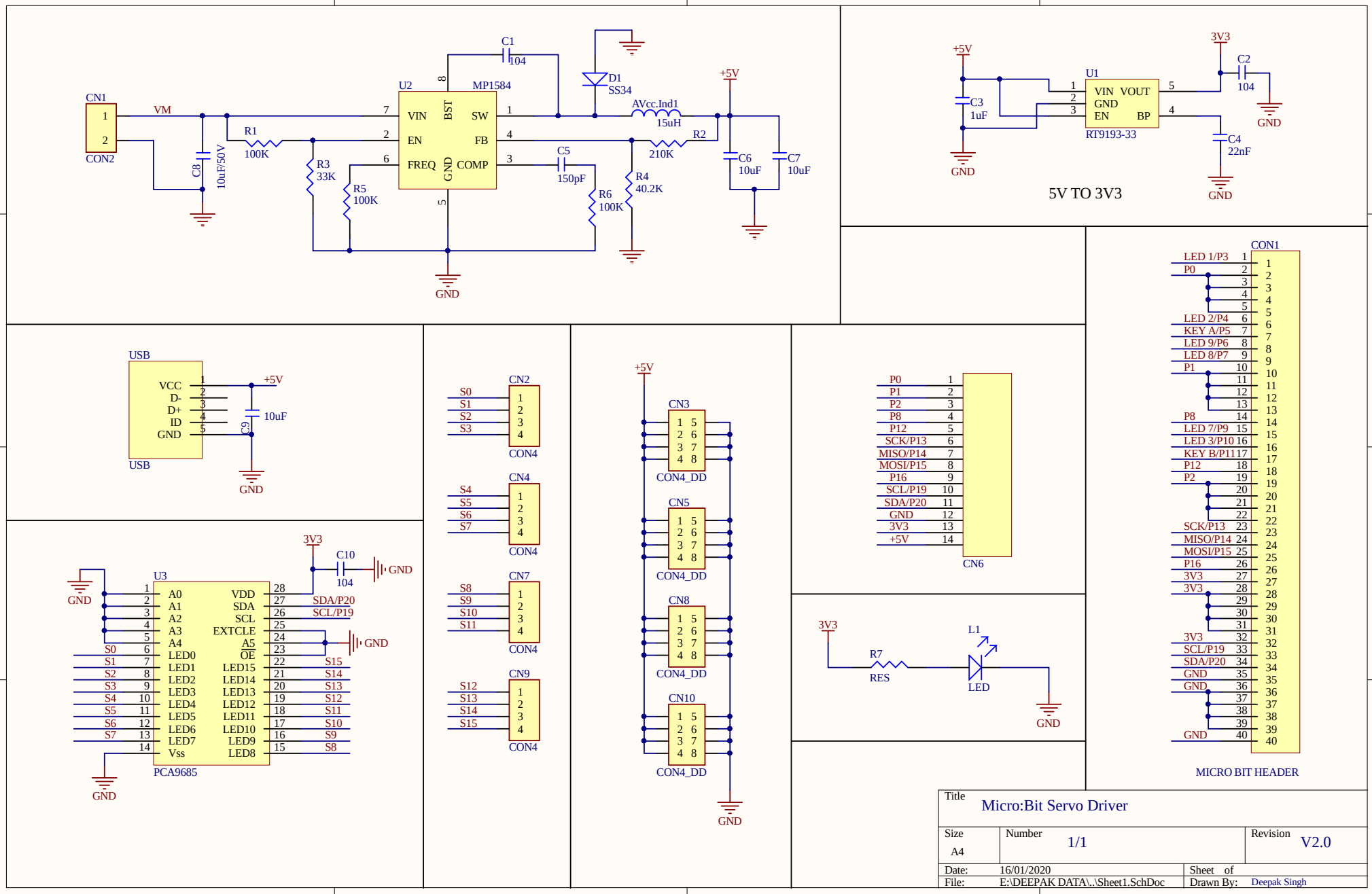

Title	Micro:Bit Servo Driver		
Size A4	Number 1/1		Revision V2.0
Date: 16/01/2020		Sheet of	
File: E:\DEEPAK DATA\..\Sheet1.SchDoc		Drawn By: Deepak Singh	