STARZ ELECTRONICS

P001/P003/P004/P005/P006 — PAYOFF PLATES / R2

ENGINEERING DRAWING — RELEASE HOLD

Units mm · A3 · Do not scale dimensions

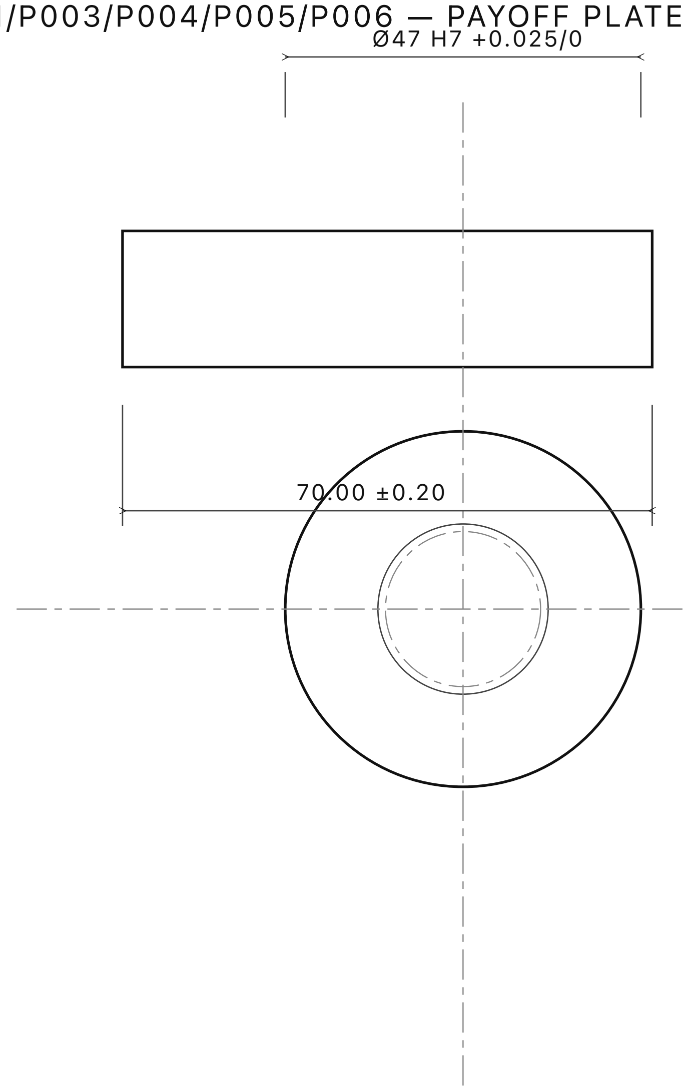

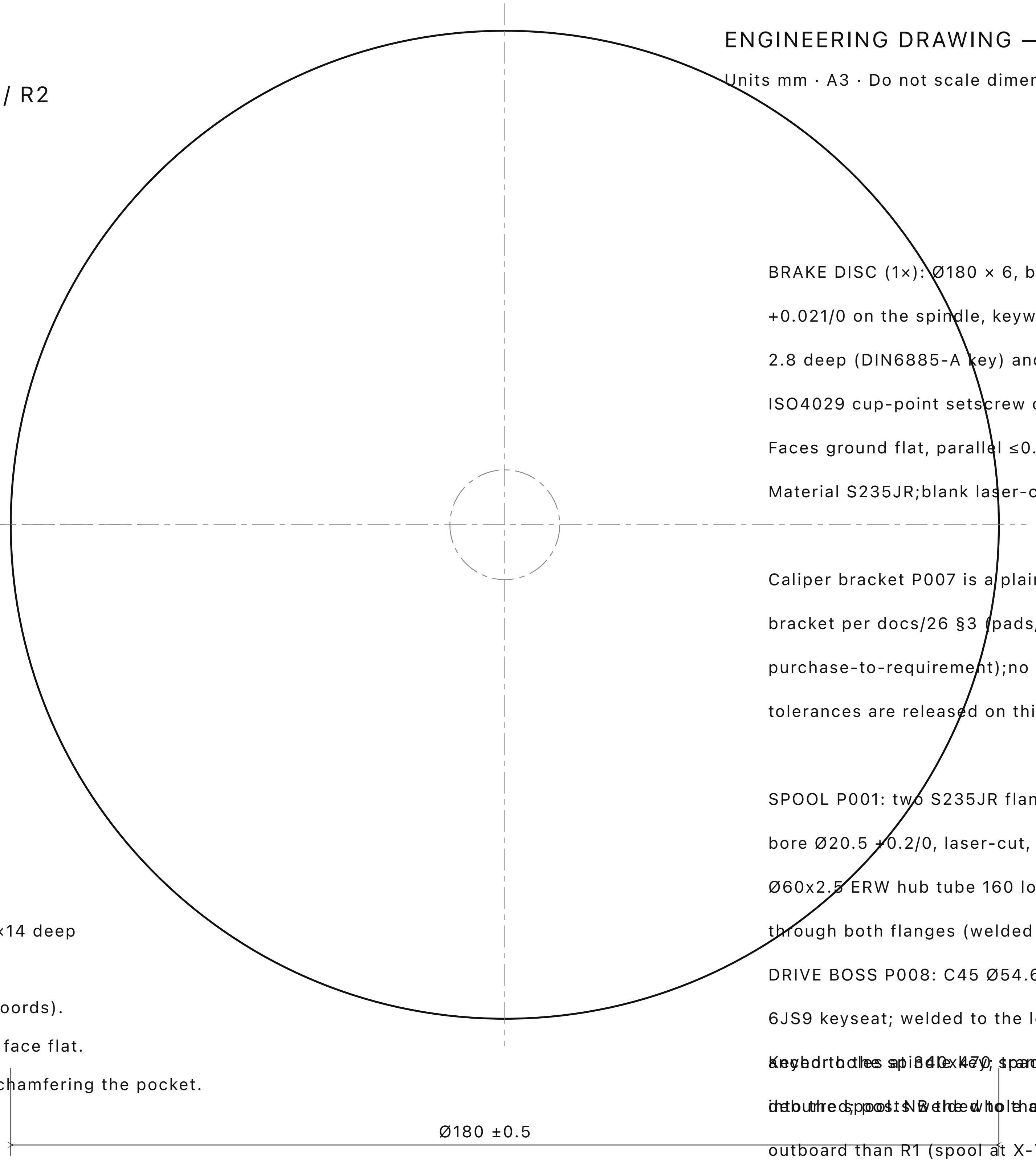

BRAKE DISC (1×): Ø180 × 6, bore Ø20 H7 +0.021/0 on the spindle, keyway 6 JS9 × 2.8 deep (DIN6885-A key) and one M6×8 ISO4029 cup-point setscrew over the key. Faces ground flat, parallel ≤0.05, Ra1.6. Material S235JR;blank laser-cut, finish-turned.

Caliper bracket P007 is a plain S235JR bracket per docs/26 §3 (pads/spring purchase-to-requirement);no machining tolerances are released on this sheet.

SPOOL P001: two S235JR flanges Ø400 x3, bore Ø20.5 +0.2/0, laser-cut, welded to a Ø60x2.5 ERW hub tube 160 long; hub passes through both flanges (welded joint); paint.

DRIVE BOSS P008: C45 Ø54.6 x 12, 20H7 bore plus 6JS9 keyseat; welded to the left flange inside the hub.

Keyed to the spindle key; transmits the brake torque into the spool. NB the whole assembly is 60 mm further outboard than R1 (spool at X-710) - see docs/26.

POST (2×, MIRRORED): 70 × 18 plate;bearing pocket Ø47 H7 ×14 deep from the spool-side face;spindle bore Ø20.5 +0.2/0 through. Pocket and bore share the datum axis (X−650,Z112 machine coords). Z span −845…+320;welded to P003 base all around;grind top face flat. Material S235JR;laser/waterjet + bore on mill;deburr without chamfering the pocket.

PROCESS: cut blanks;mill pockets/bore to the common datum;weld posts to base with a fixture holding both posts coaxial;stress-relieve;re-check pocket positions after welding.INSPECT: pocket Ø47 H7, coaxiality of the two posts ≤0.1 after welding;disc bore and faces.ASSEMBLY: press 6204 bearings;insert spindle.

BASE P003: S235JR 430x560x8; four Ø13 anchor holes at 340x470 spacing; edges deburred; posts welded to the top face.

PARTS P001 · P003 · P004 · P005 · P006 (P007 reference)

S1-B-MECH-R4-2026-09-16

SCALE1:1 / DIMENSION RECORD

RELEASE HOLD: weld quality and load validation;not fabricated