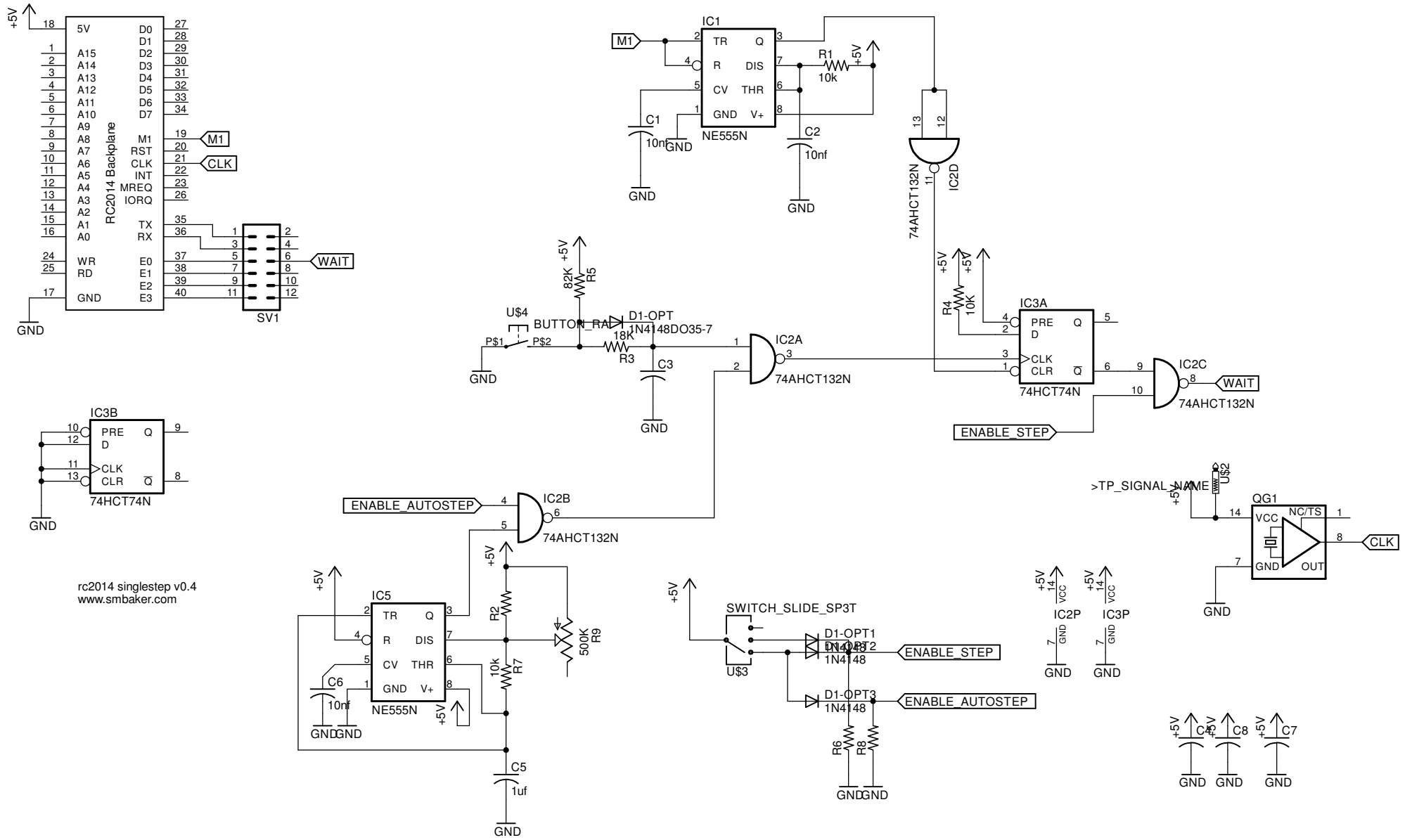

9/26/2022 12:57:00 PM f=0.91 Y:\winapps\prop\schem\rc2014-singlestep.sch (Sheet: 1/1)