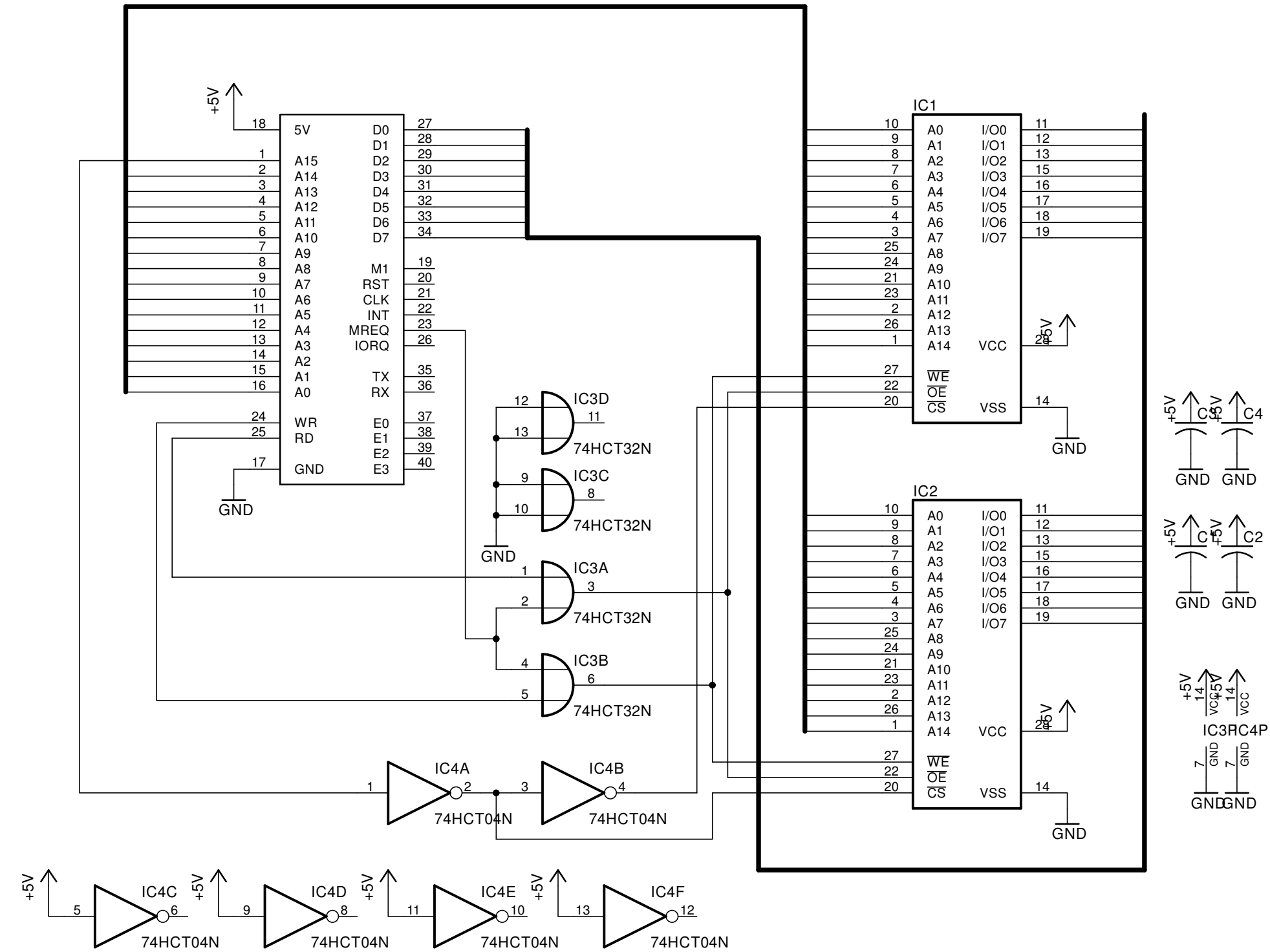

9/26/2022 1:02:38 PM f=1.24 Y:\winapps\prop\schem\rc2014-dualram.sch (Sheet: 1/1)