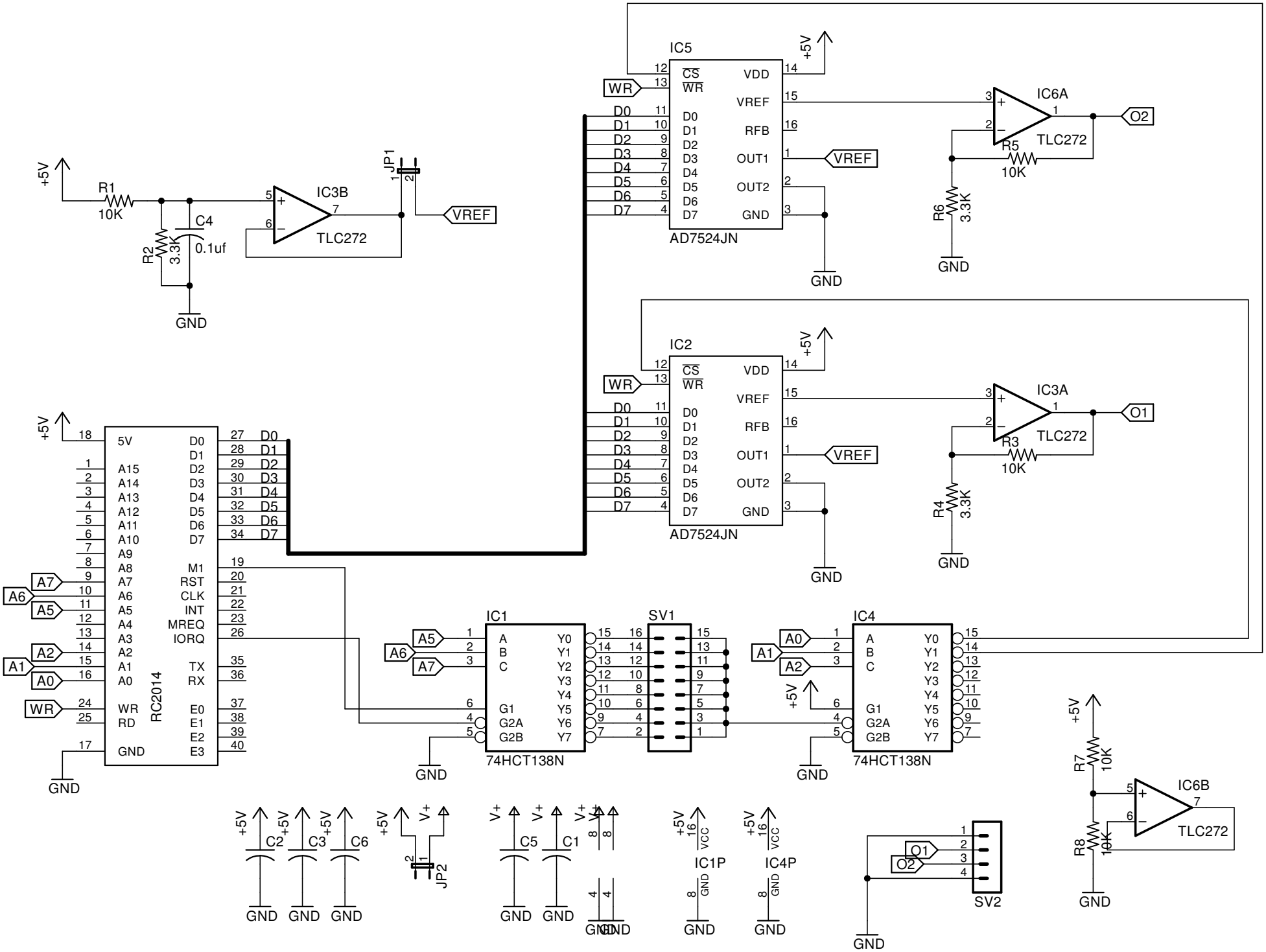

9/26/2022 12:59:51 PM f=1.13 Y:\winapps\prop\schem\rc2014-dac.sch (Sheet: 1/1)