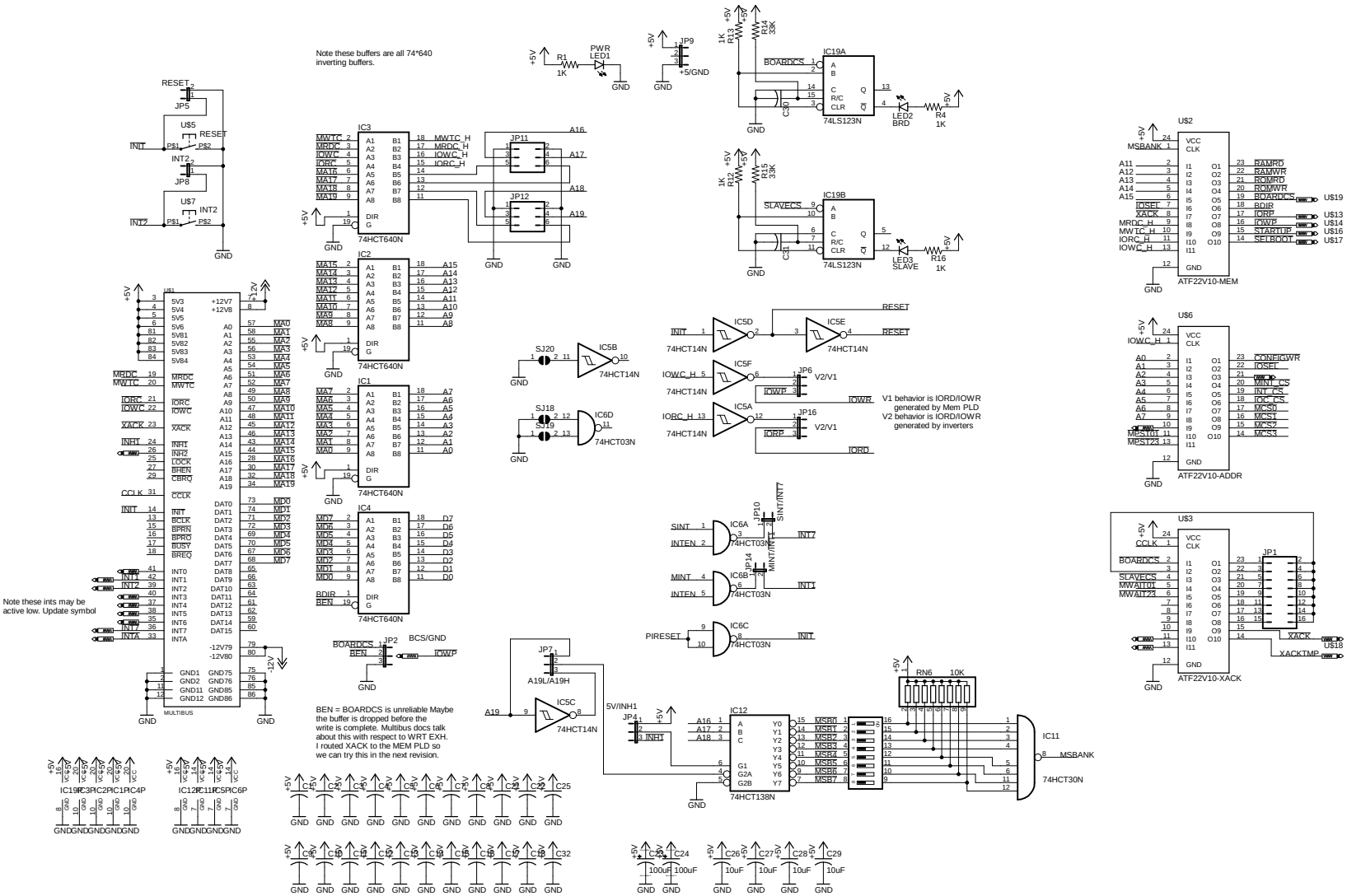

Multibus RAM/ROM/pi-IOC
www.smbaker.com

Rev 0.6
* Fix missing +5V on R2/R3
* Moved Cap too close to 245
* Changed 245 to 640 inverting bus drivers
* Changed all DB and MA nets to inverting
Rev 0.8
* Added two multimodules
* Added interrupt pins
* Redid addr PLD
Rev 0.15
* IOC emulator using Pi
Rev 0.16
* Realized the IOC uses inverted bus
* Added Slave LED and SlaveCS to XACK
* Made slave logic use IORC/IOWC instead of IORD/IOWR
* Slave logic is now independent of MEM logic
(but int ctl still uses MEM pld)
Rev 0.20
* Pulse stretcher for act LEDs
V2-Rev-0.22
* IO and Mem strobes through HCT640
* RESET through inverter
* All IO/Mem strobes to PLDs now active-high
* Jumpers to enable A16-A19
* Remove RAM/ROM addr dip switches
* Added optional master PIC
* Added CPU Control Latch
* Added pi-reset
* Connected CPU control latch to MEM PLD to enable control of banks
* Add pullups to MPST lines
* Plumb MWAIT lines to XACK circuit
* Added pi power jumper and jack
* Added pull-downs at the multimodule sockets, especially for reset
Rev 0.26
* XACK to mem PLD
* Redo Inhibit and A19 logic
Rev 0.27
* Option to generate IOWR/IORD w/o Mem PLD

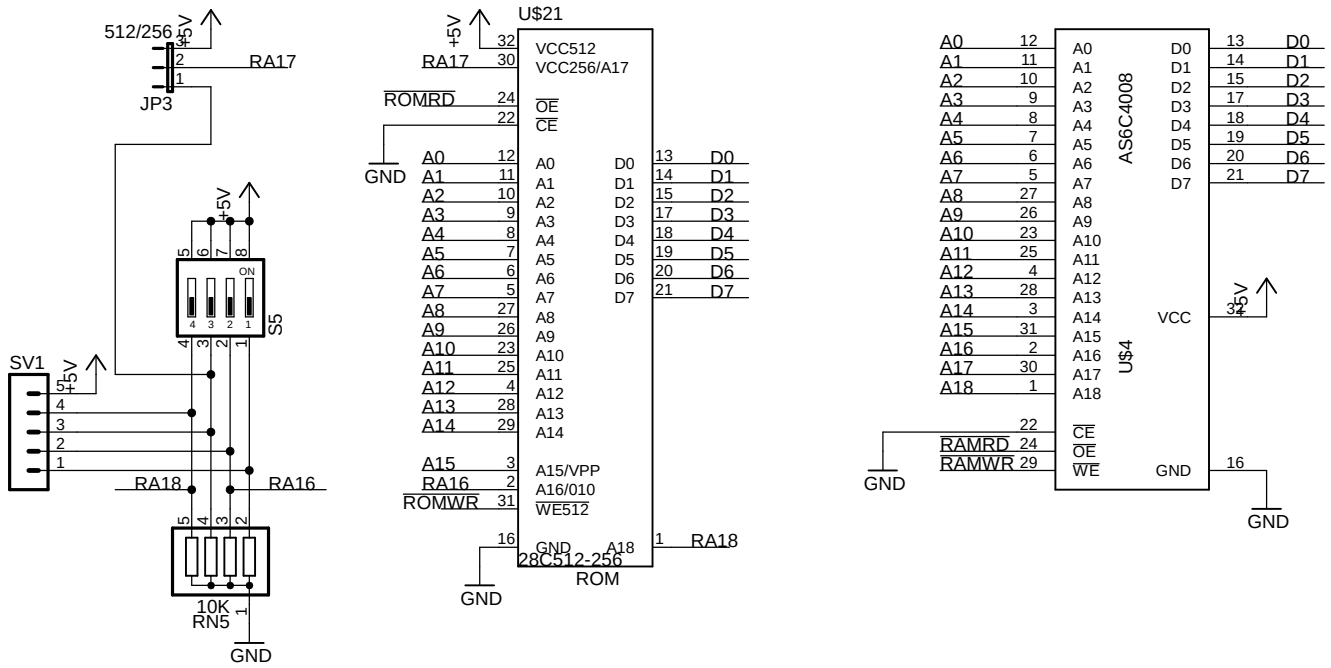
512/256
+5V
RA17
JP3
+5V
ON
S5
SV1
+5V
RA18
RA16
10K
RN5
GND
U$21
+5V
RA17
ROMRD
GND
VCC512
VCC256/A17
OE
CE
A0
A1
A2
A3
A4
A5
A6
A7
A8
A9
A10
A11
A12
A13
A14
A15/VPP
A16/010
WE512
GND
A18
D0
D1
D2
D3
D4
D5
D6
D7
A15
A16
ROMWR
RA18
28C512-256
ROM
GND
AS6C4008
U$4
VCC
GND
RAMRD
RAMWR
CE
OE
WE
+5V
GND

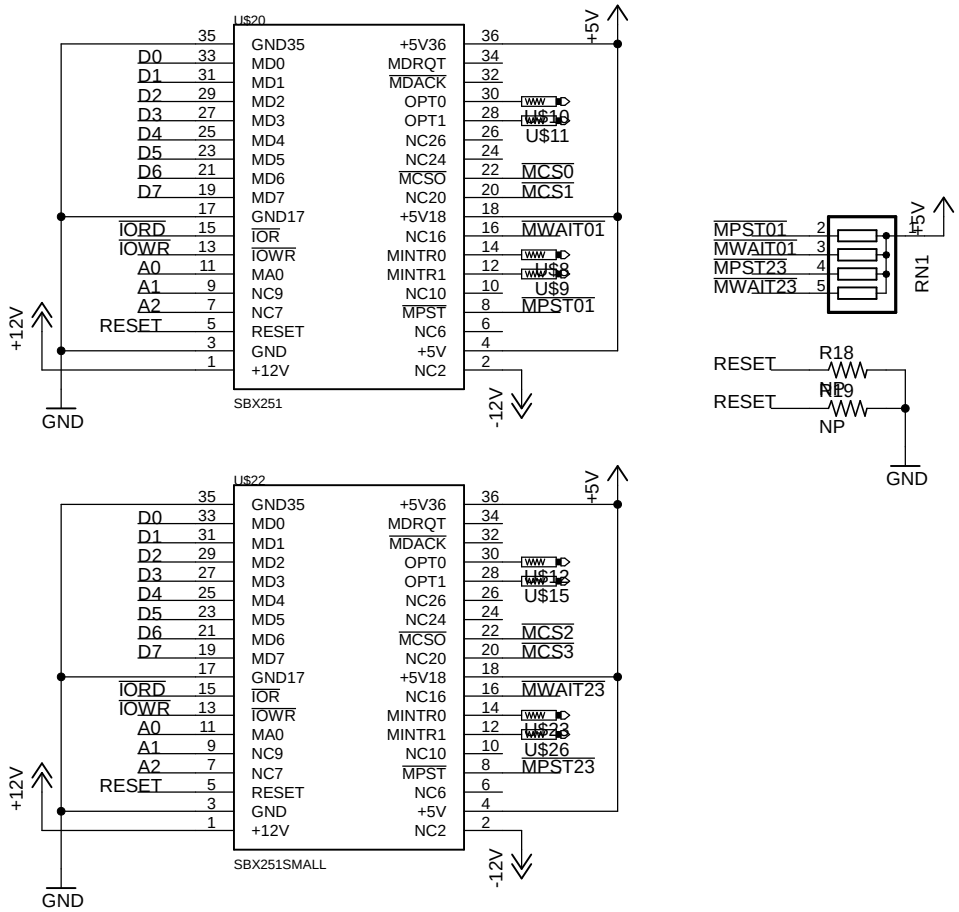
U$20
SBX251
GND35 35
MD0 33
MD1 31
MD2 29
MD3 27
MD4 25
MD5 23
MD6 21
MD7 19
GND17 17
IOR 15
IOWR 13
MA0 11
NC9 9
NC7 7
RESET 5
GND 3
+12V 1
+5V36 36
MDRQT 34
MDACK 32
OPT0 30
OPT1 28
NC26 26
NC24 24
MCSO 22
NC20 20
+5V18 18
NC16 16
MINTR0 14
MINTR1 12
NC10 10
MPST 8
NC6 6
+5V 4
NC2 2
D0
D1
D2
D3
D4
D5
D6
D7
IORD
IOWR
A0
A1
A2
RESET
U$10
U$11
MCS0
MCS1
MWAIT01
U$8
U$9
MPST01
+5V
-12V
+12V
GND
U$22
SBX251SMALL
U$12
U$15
MCS2
MCS3
MWAIT23
U$23
U$26
MPST23
MPST01
MWAIT01
MPST23
MWAIT23
RN1
R18
R19
NP
RESET
GND

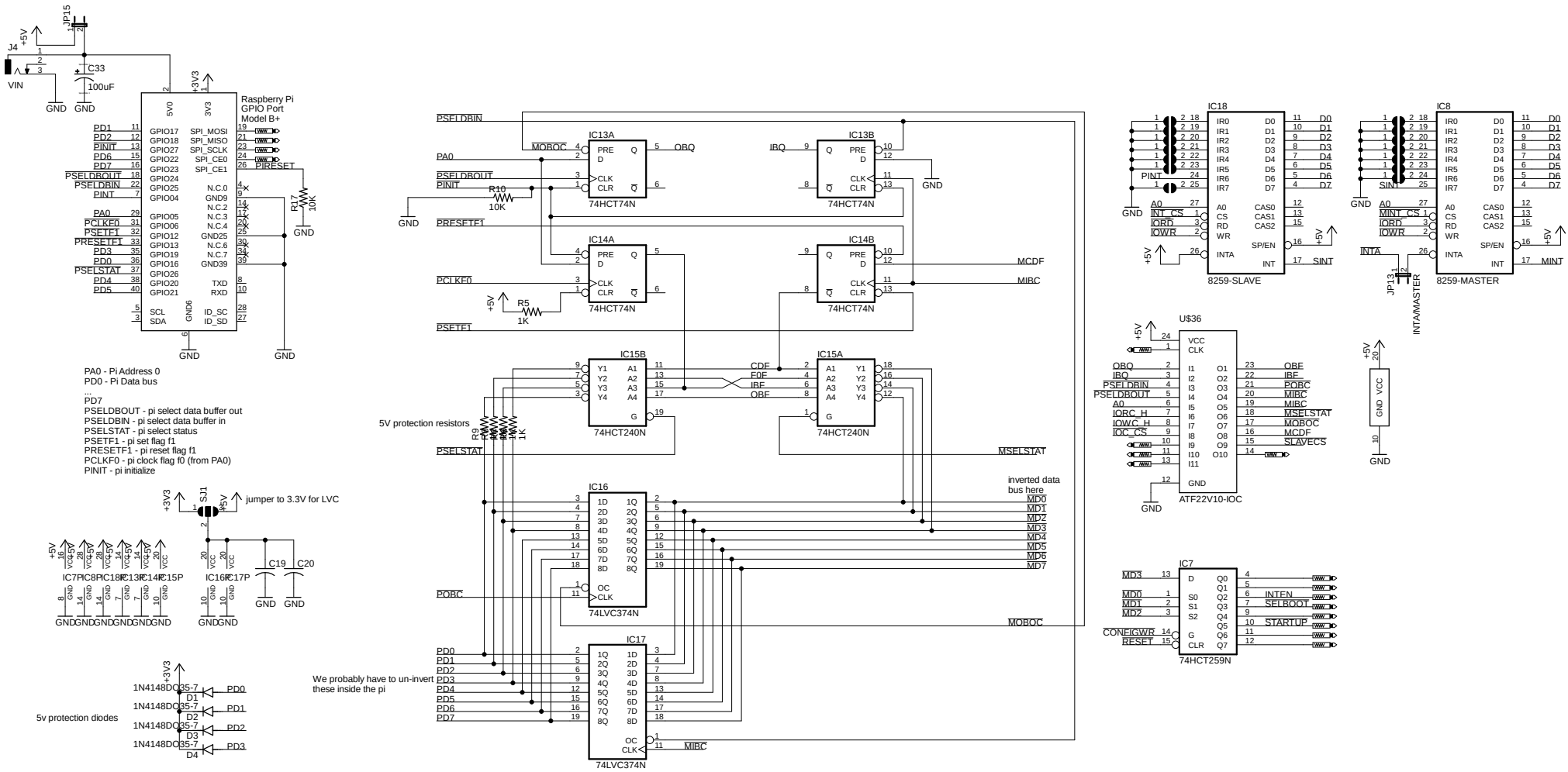
Raspberry Pi
GPIO Port
Model B+
PA0 - Pi Address 0
PD0 - Pi Data bus
...
PD7
PSELDBOUT - pi select data buffer out
PSELDBIN - pi select data buffer in
PSELSTAT - pi select status
PSETF1 - pi set flag f1
PRESETF1 - pi reset flag f1
PCLKF0 - pi clock flag f0 (from PA0)
PINIT - pi initialize
jumper to 3.3V for LVC
5V protection resistors
5v protection diodes
We probably have to un-invert these inside the pi
inverted data bus here
74HCT74N
74HCT240N
74LVC374N
74HCT259N
8259-SLAVE
8259-MASTER
ATF22V10-IOC
INTA/MASTER