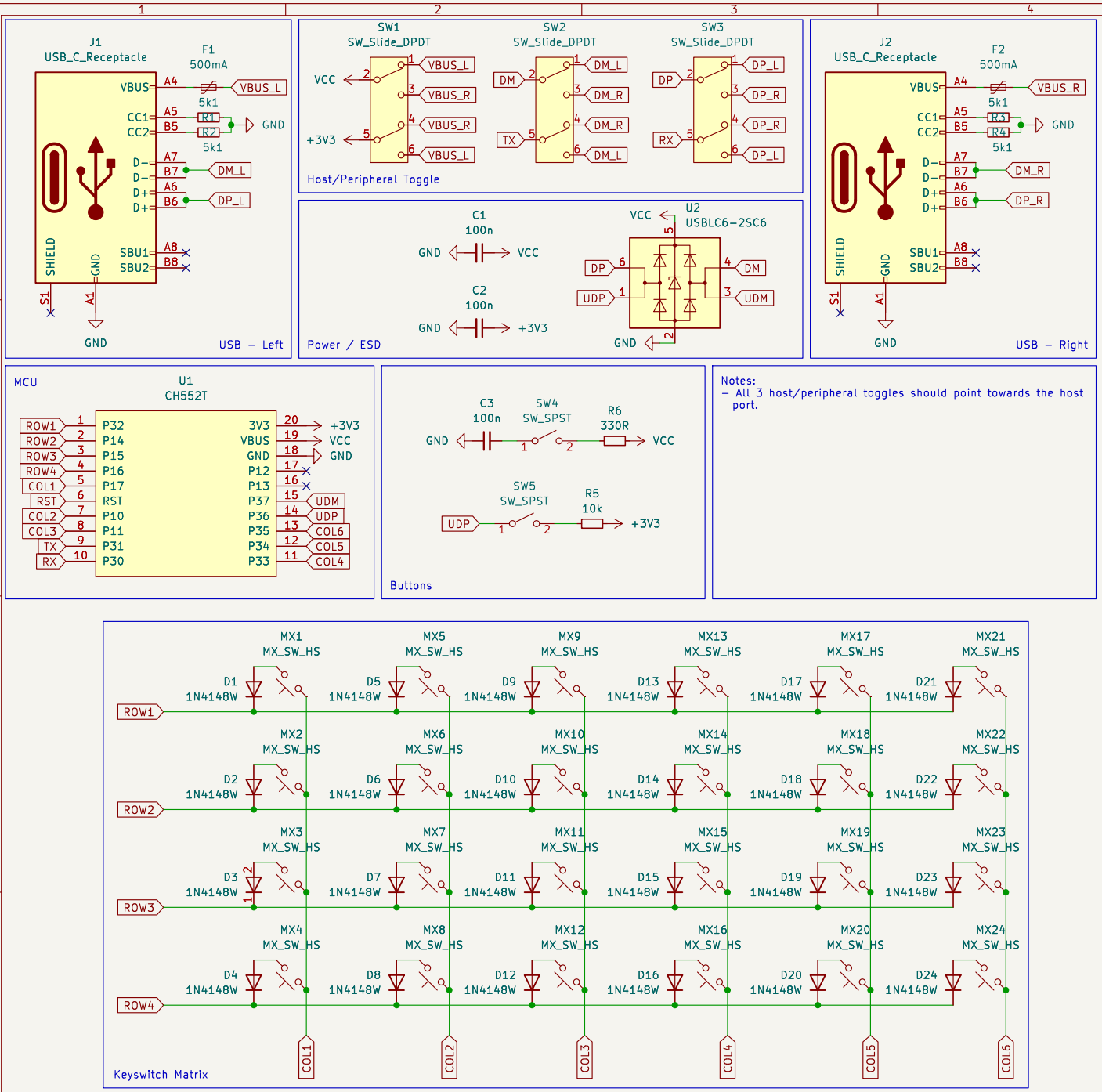

SYM1
Logo_Open_Hardware_Small
Symbol:OSHW-Logo_5.7x6mm_SilkScreen

Sheet: /
File: lattice.kicad_sch

Title: lattice (left)

Size: User	Date:	Rev:
KiCad E.D.A. kicad 7.0.10		Id: 1/1