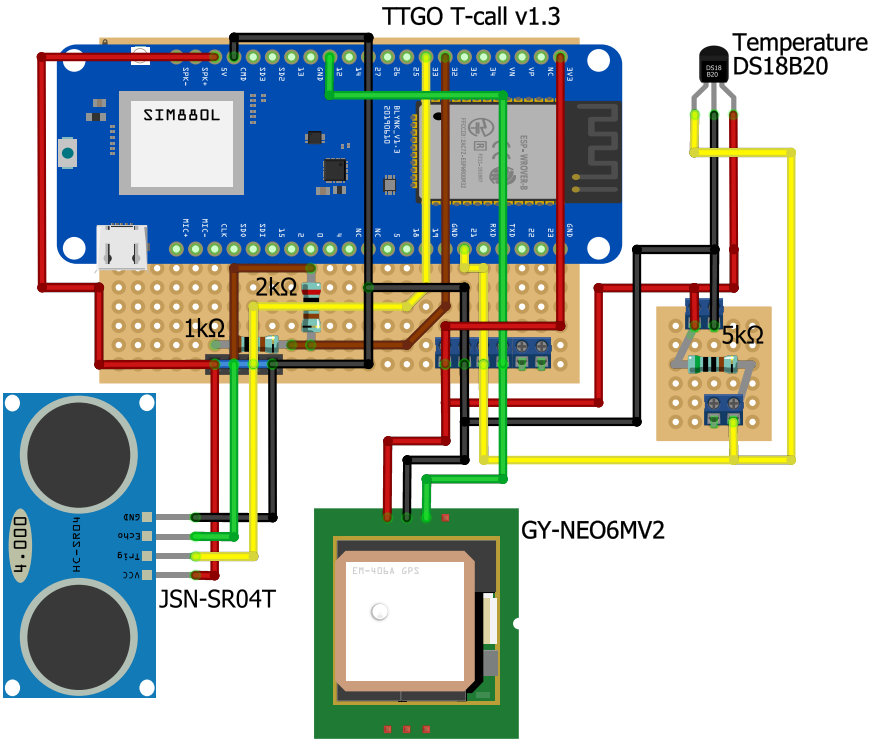

32->echo
33->trig
12 -> gps tx
21 -> ds18b20 ->
5koh

JSN-

fritzing