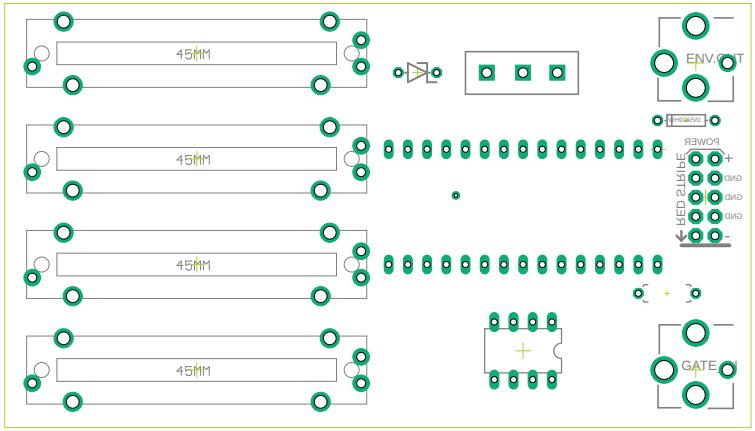
GATE
ENV.OUT
45MM
45MM
45MM
45MM
LED SWITCH
POWER
GND
GND
GND
+
-