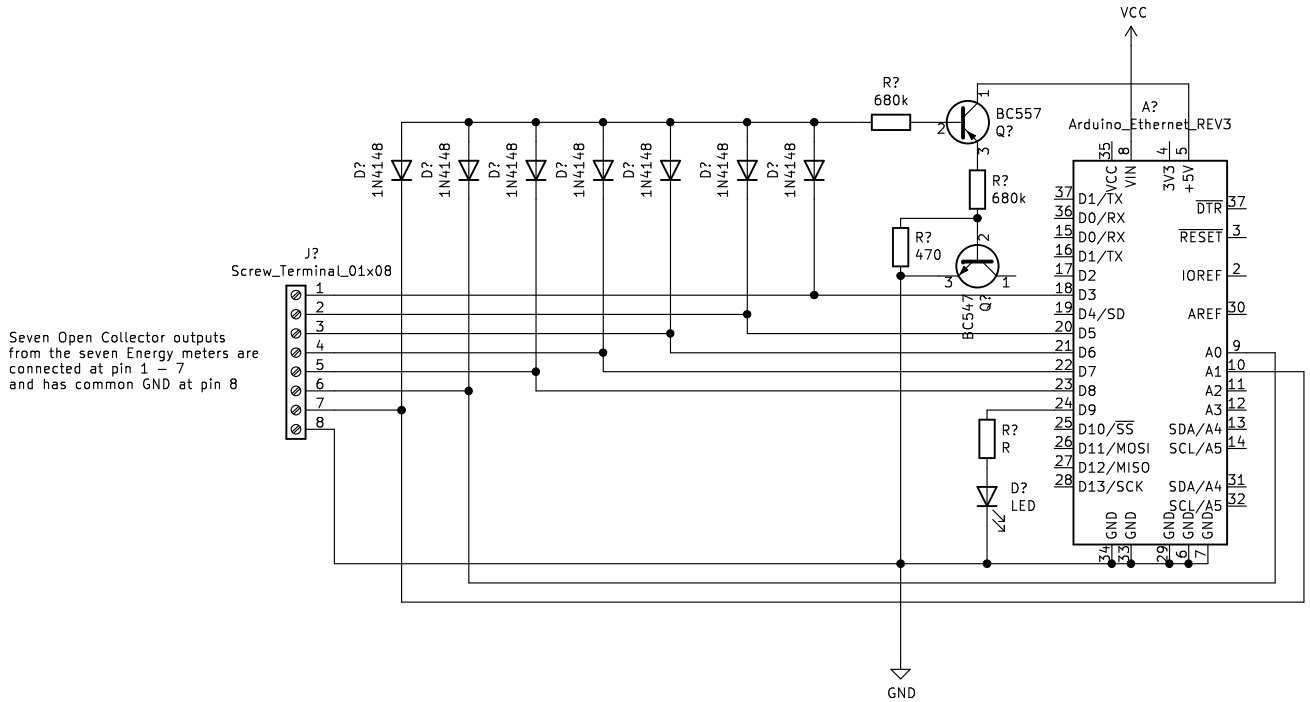

El-Tek Trafikteknik I/S

Sheet: /
File: ArduinoEthernet.sch

Title: Energy Registrations for Arduino Ethernet REV3

Size: A4	Date: 2020-11-22	**Rev: 0.1.0**
KiCad E.D.A. kicad (5.1.8)-1		Id: 1/1