# Local_Connectors_Library

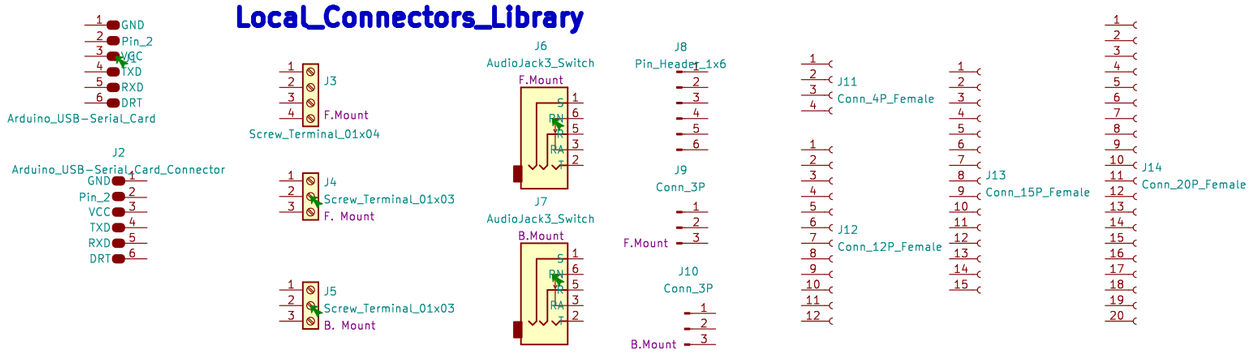


# Local_Device_Library

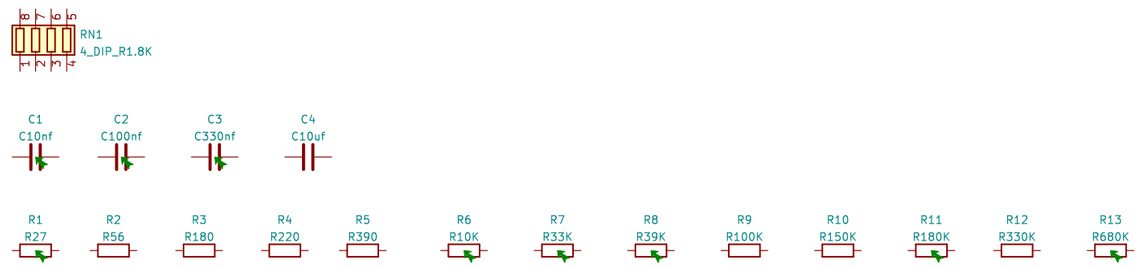


# Local_Transistor_BJT_Library

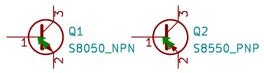


# Local_Diode_Library

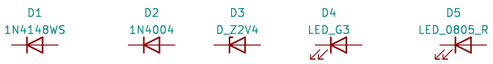


# Local_MCU_Module_Library

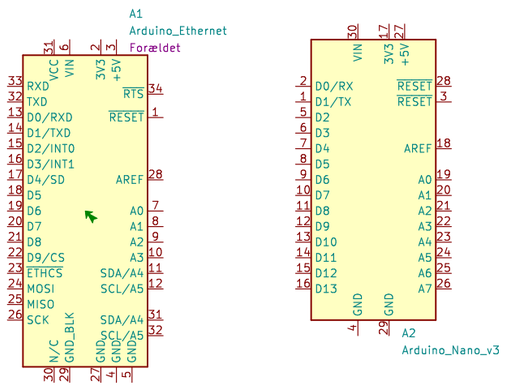


# Local_Miscklllaneous_Library

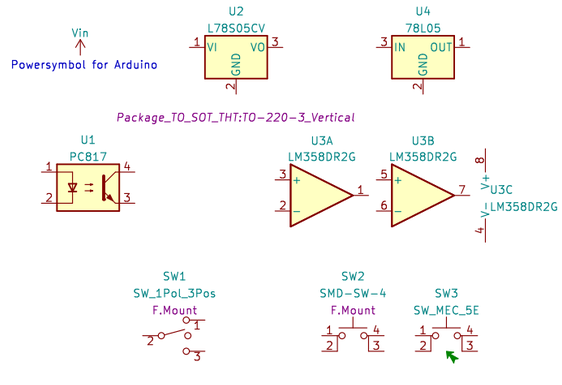


**El-Tek Trafikteknik I/S**

Sheet: /
File: kicad-library.kicad_sch

***Title: Local Components and Footprints overview***

| | | |
|---|---|---|
| Size: A3 | Date: 2022-03-29 | **Rev: V1.0.0** |
| KiCad E.D.A. kicad (6.0.0) | | Id: 1/1 |