Local_Connectors_Library

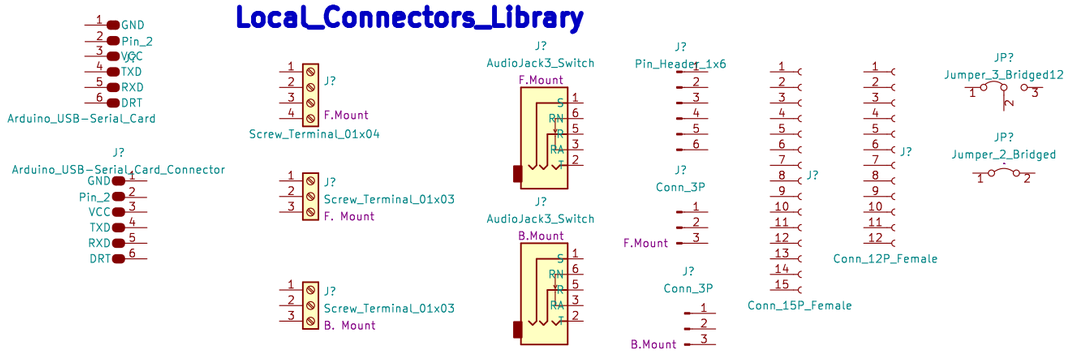

Local_Device_Library

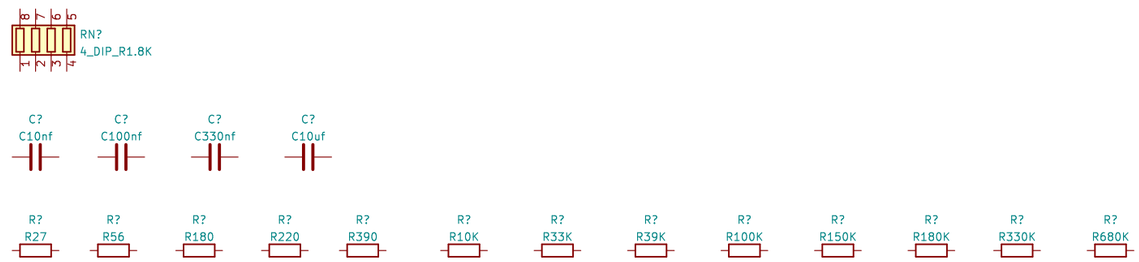

Local_Transistor_BJT_Library

Local_Diode_Library

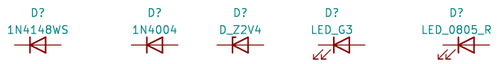

Local_MCU_Module_Library

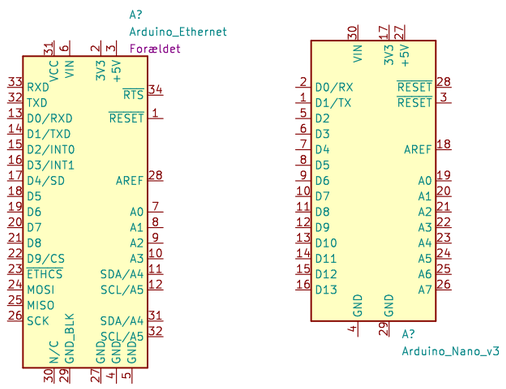

Local_Miscellaneous_Library

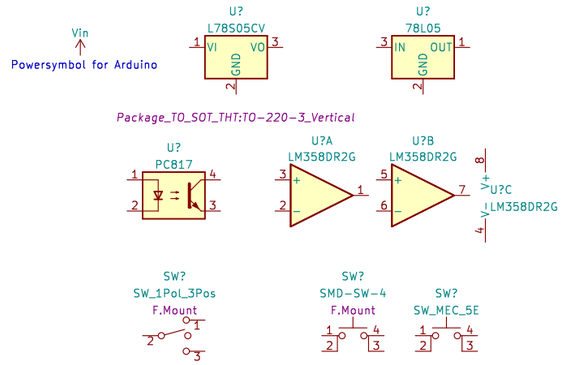

El-Tek Trafikteknik I/S		
Sheet: /		
File: kicad-library.kicad_sch		
Title: Local Components and Footprints overview		
Size: A3	Date: 2022-03-29	**Rev: V1.0.0**
KiCad E.D.A. kicad (6.0.0)		Id: 1/1