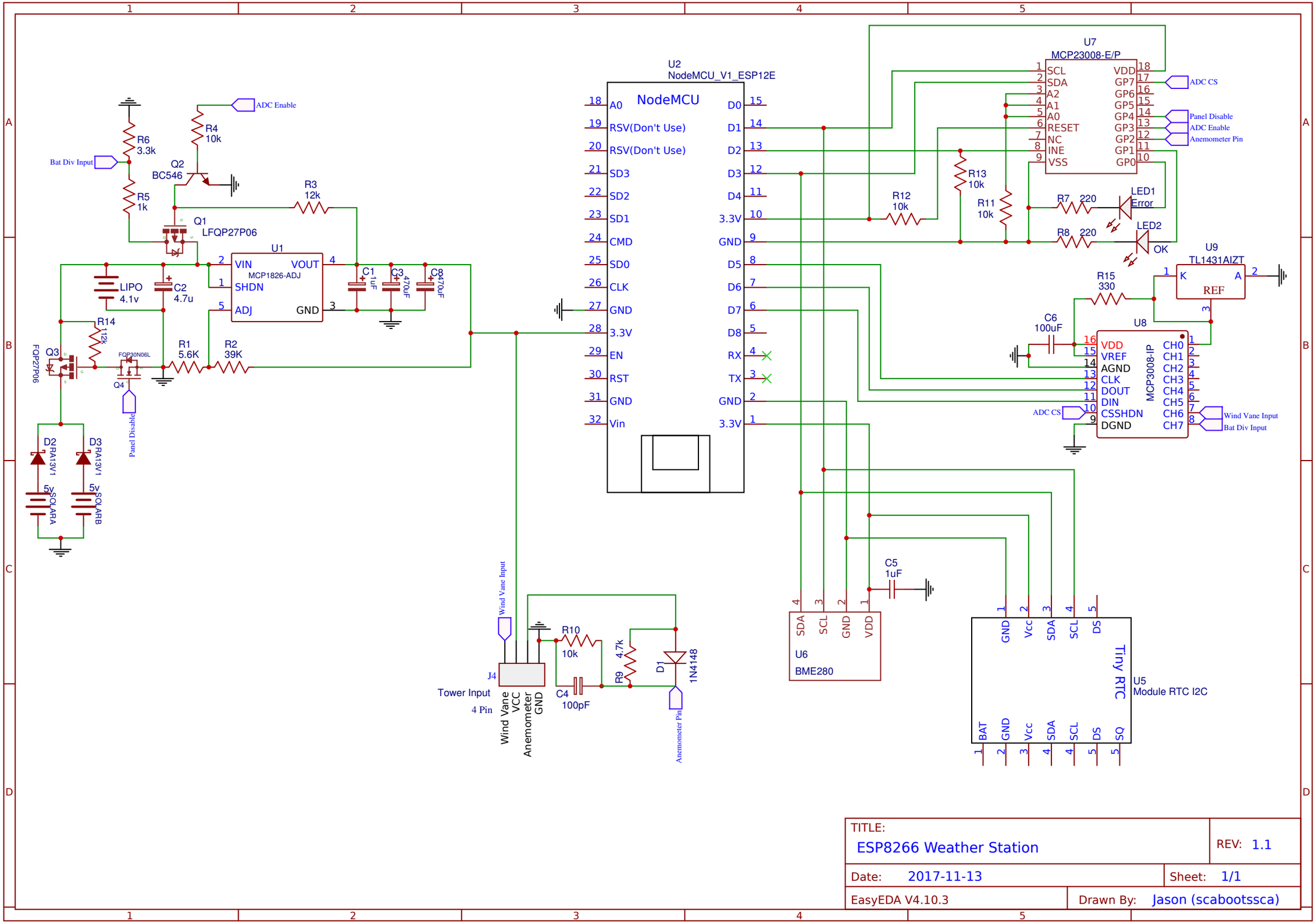

TITLE: ESP8266 Weather Station	REV: 1.1
Date: 2017-11-13	Sheet: 1/1
EasyEDA V4.10.3	Drawn By: Jason (scabootssca)