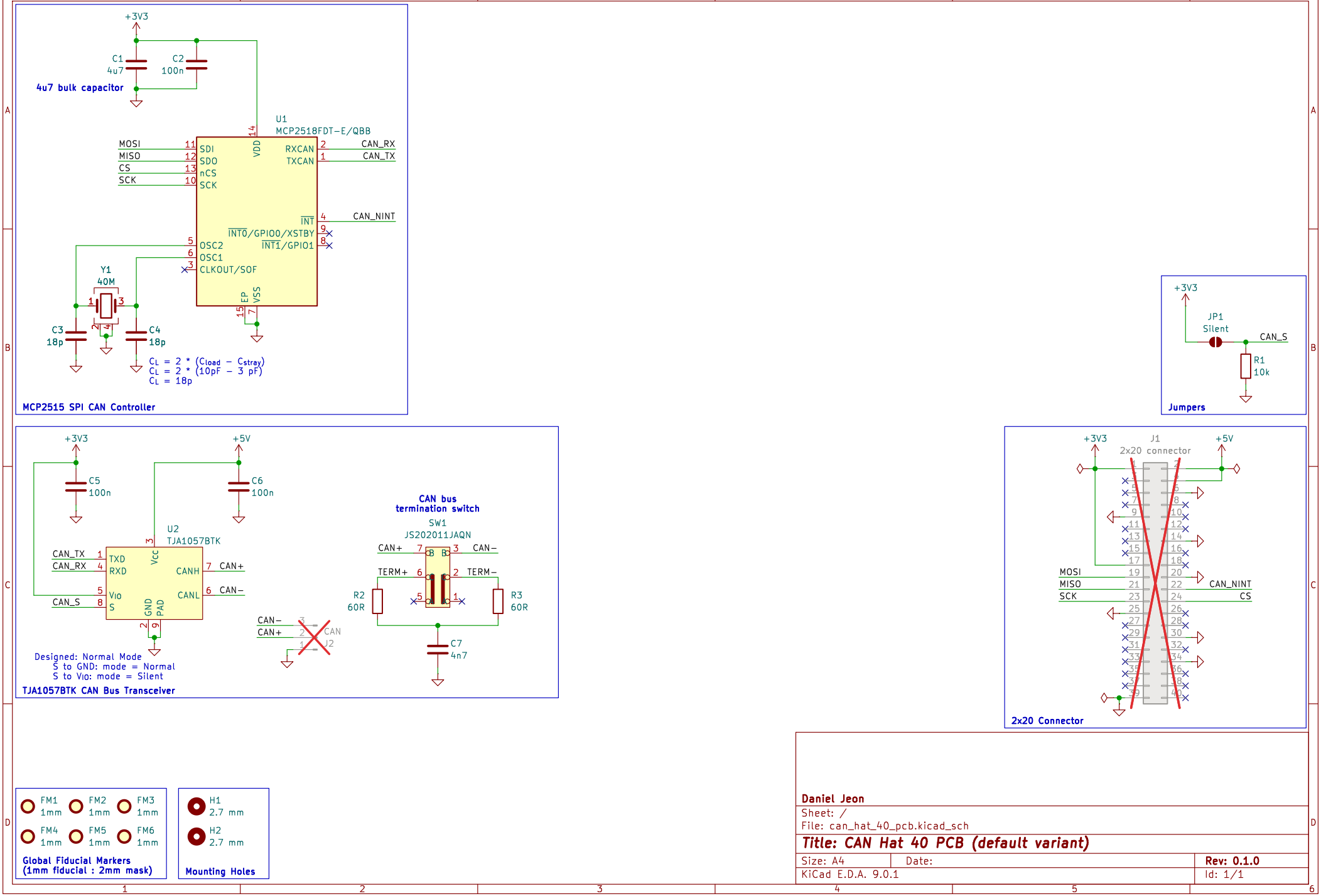

Daniel Jeon

Sheet: /

File: can_hat_40_pcb.kicad_sch

Title: CAN Hat 40 PCB (default variant)

Size: A4	Date:	Rev: 0.1.0
KiCad E.D.A. 9.0.1		Id: 1/1