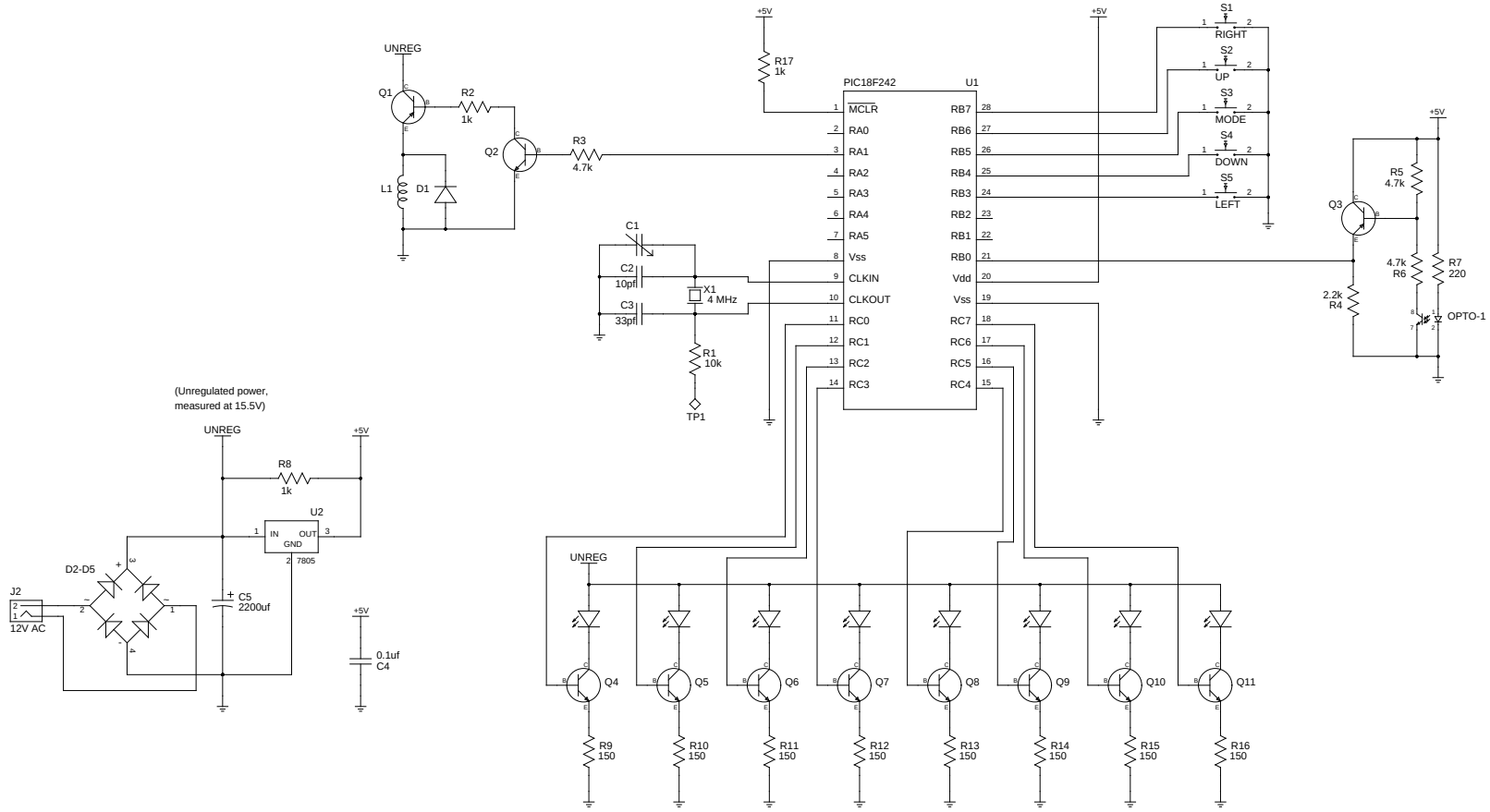

TITLE	Fascinations XP3 (unmodified)
FILE: original-xp3.sch	REVISION: C
PAGE 1 OF 1	DRAWN BY: Micah Dowty <micah@navi.cx>