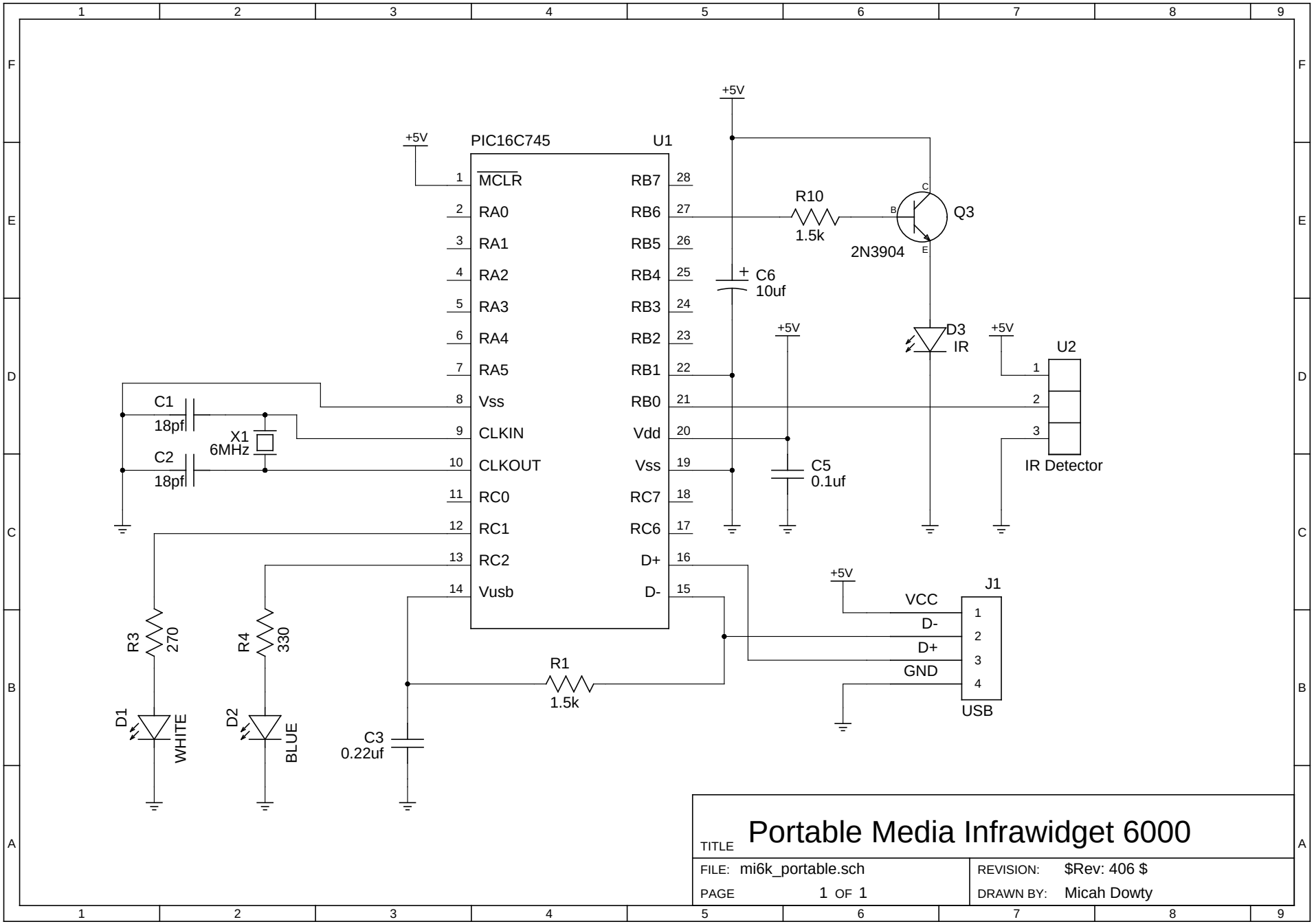
PIC16C745
U1
MCLR
RA0
RA1
RA2
RA3
RA4
RA5
Vss
CLKIN
CLKOUT
RC0
RC1
RC2
Vusb
RB7
RB6
RB5
RB4
RB3
RB2
RB1
RB0
Vdd
Vss
RC7
RC6
D+
D-
+5V
R10
1.5k
Q3
2N3904
C6
10uf
C5
0.1uf
D3
IR
U2
IR Detector
C1
18pf
C2
18pf
X1
6MHz
R3
270
R4
330
D1
WHITE
D2
BLUE
R1
1.5k
C3
0.22uf
J1
VCC
D-
D+
GND
USB
TITLE
Portable Media Infrawidget 6000
FILE: mi6k_portable.sch
PAGE 1 OF 1
REVISION: $Rev: 406 $
DRAWN BY: Micah Dowty