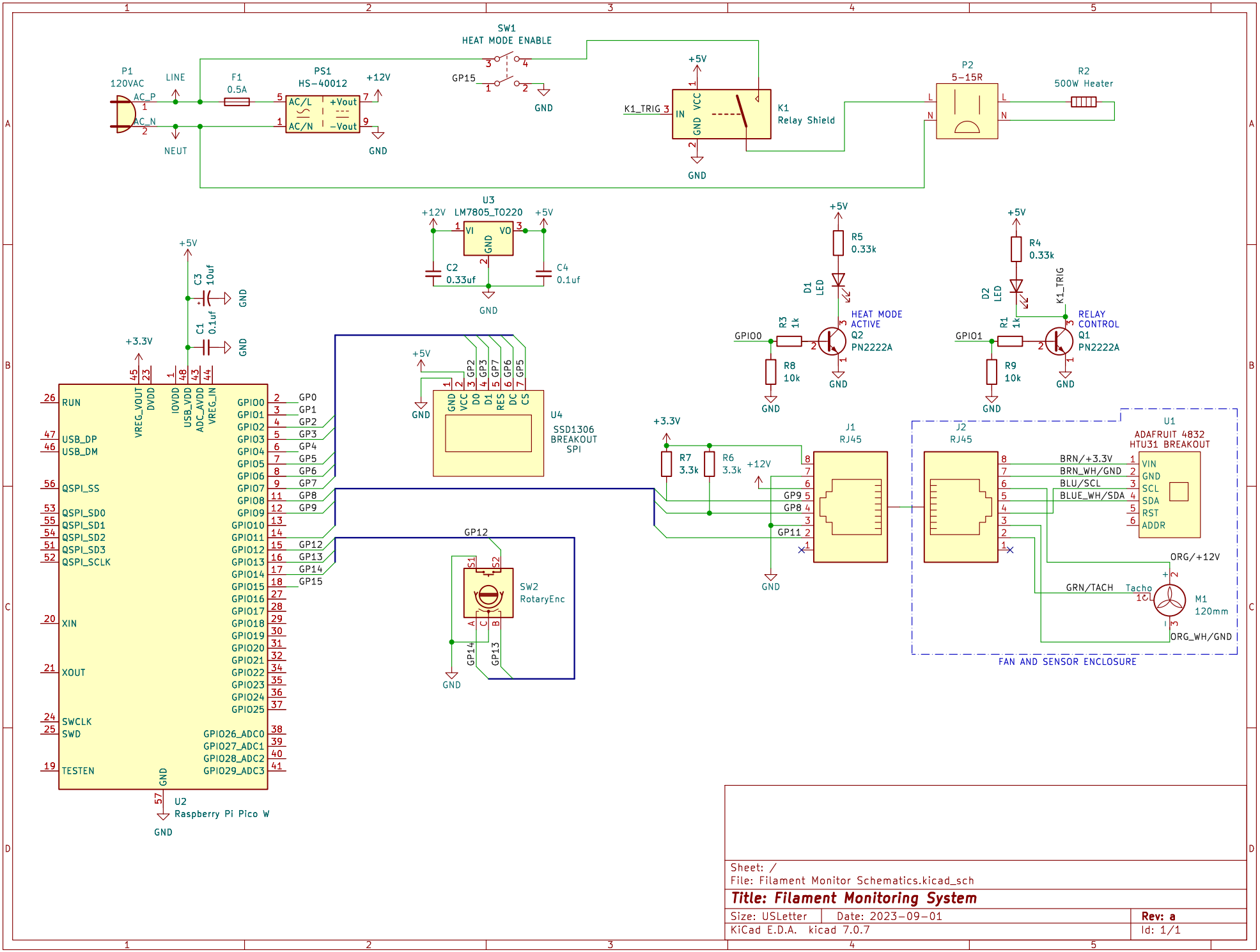

Sheet: /
File: Filament Monitor Schematics.kicad_sch

Title: Filament Monitoring System

Size: USLetter	Date: 2023-09-01	Rev: a
KiCad E.D.A. kicad 7.0.7		Id: 1/1