Github: https://github.com/scattercat-123/E-Scooter

E-Scooter

Assembly

Cut Mild Steel Sheets, Pipes & Tubes for Frame (x7)

Dimensions in CAD File.

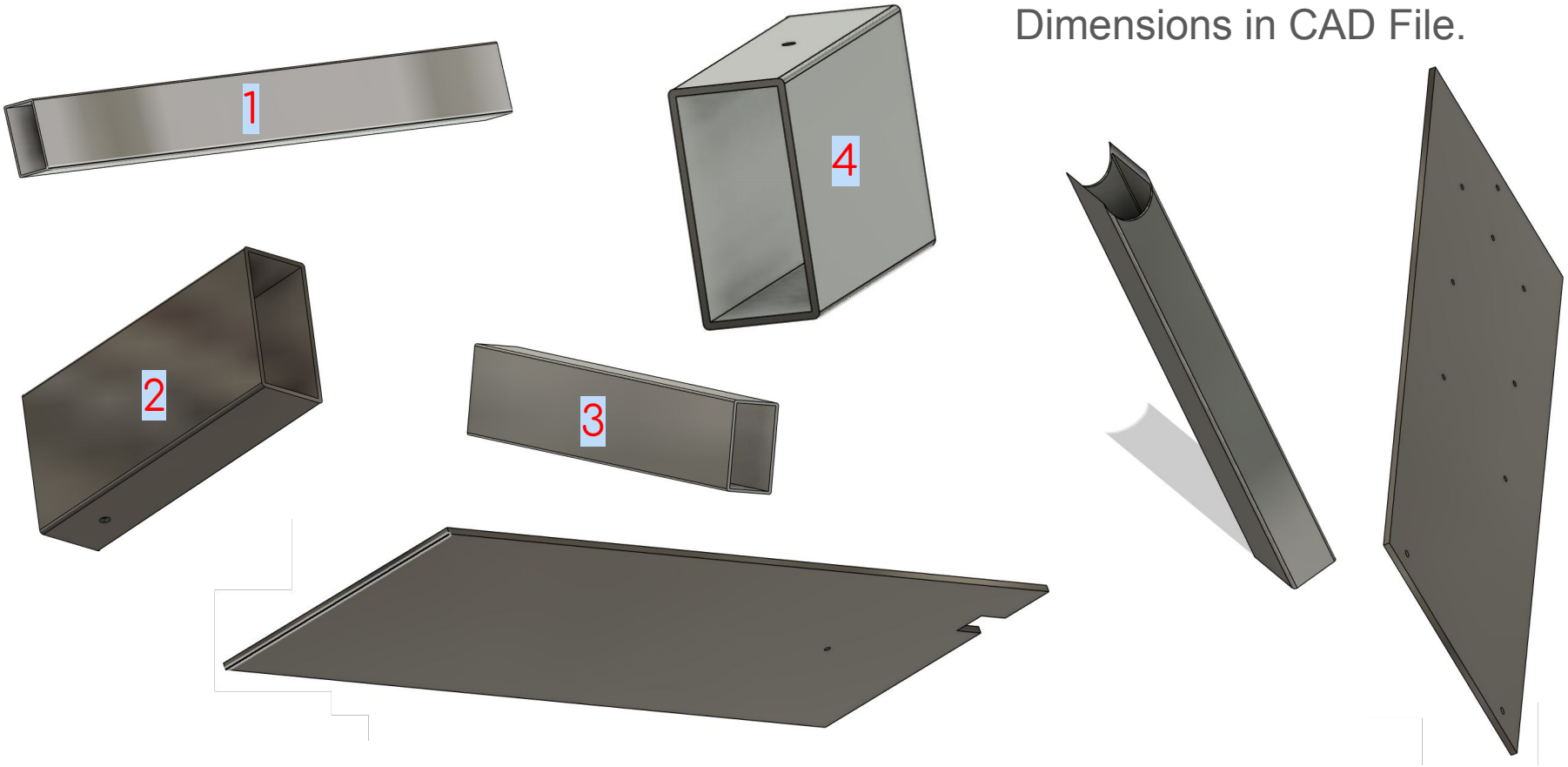

Step 1: Basic frame shape

Arrange Parts 1, 2, 3 & 4 in a rectangular shape

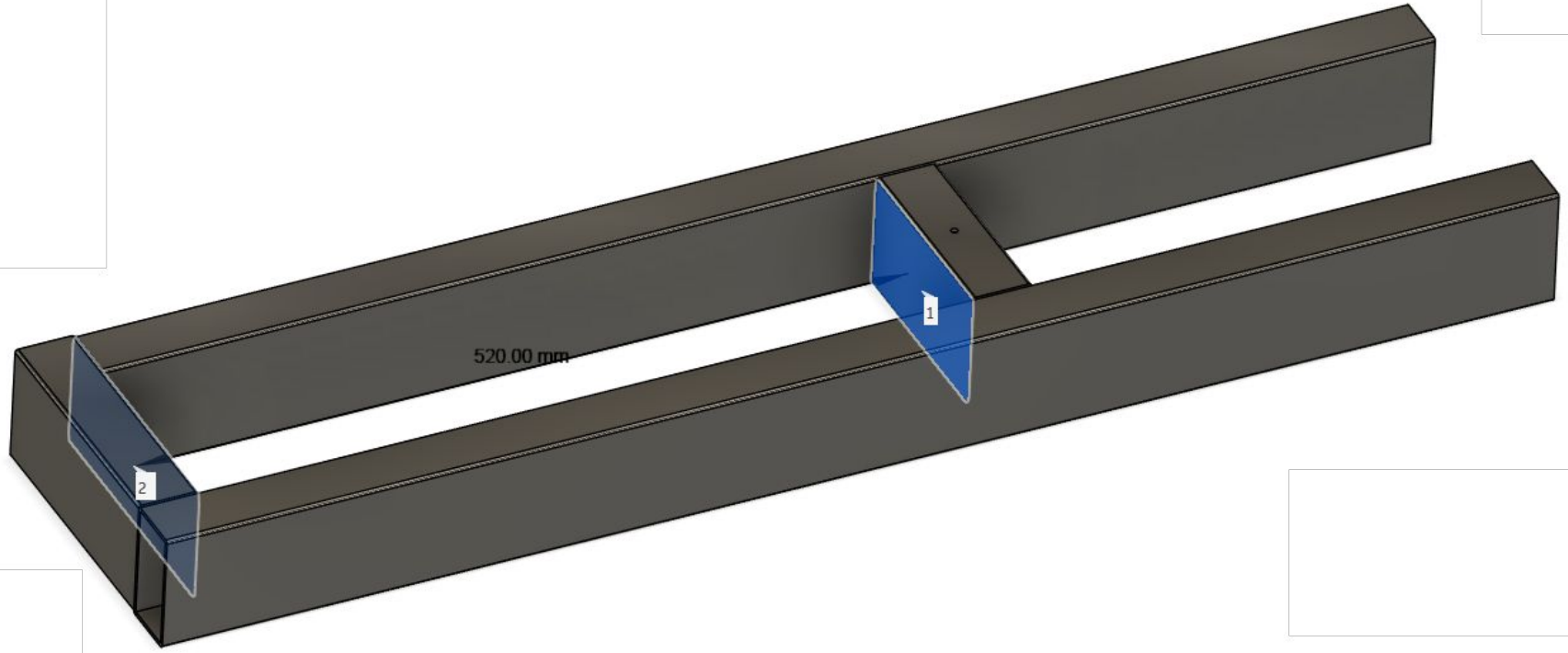

Step 2: Basic frame shape

Add part 5 as the bottom plate.

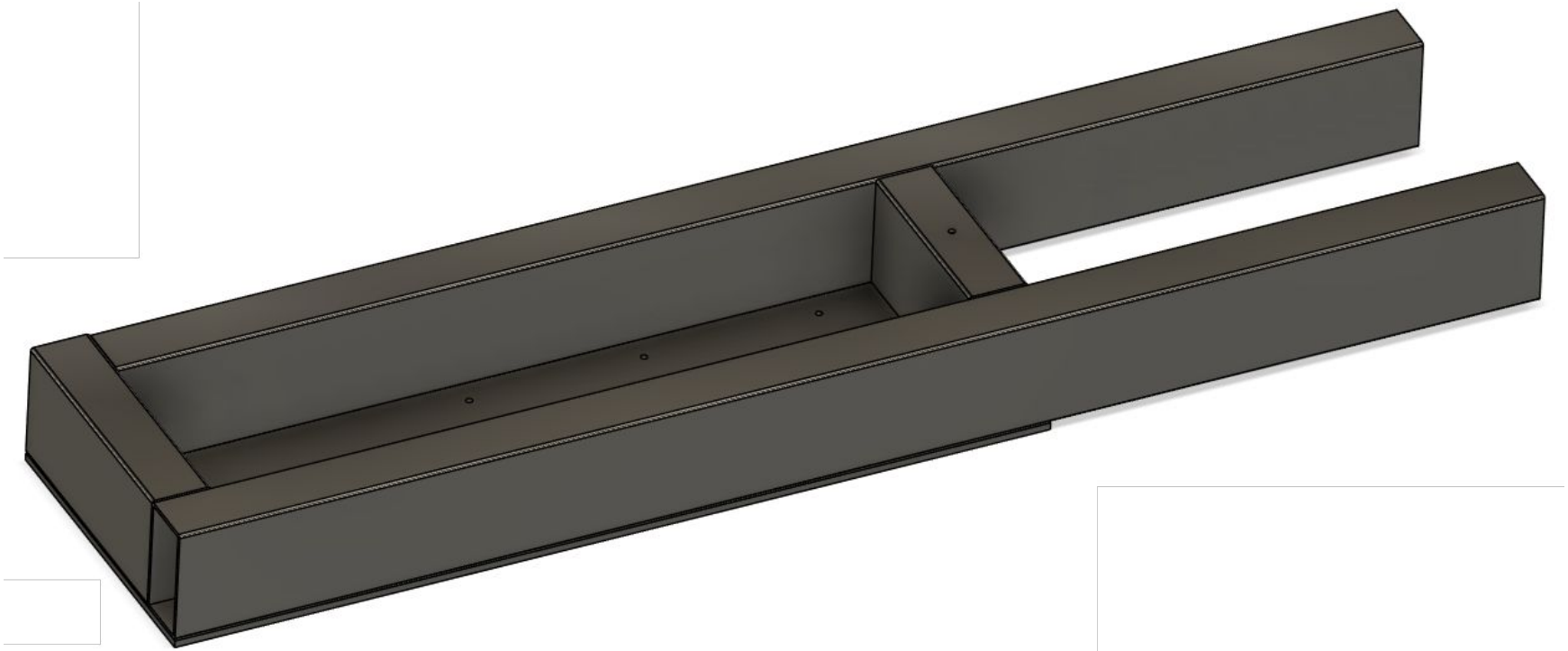

Step 1: Electronics

Make the battery pack with 7S4P configuration by spot welding and adding spacers

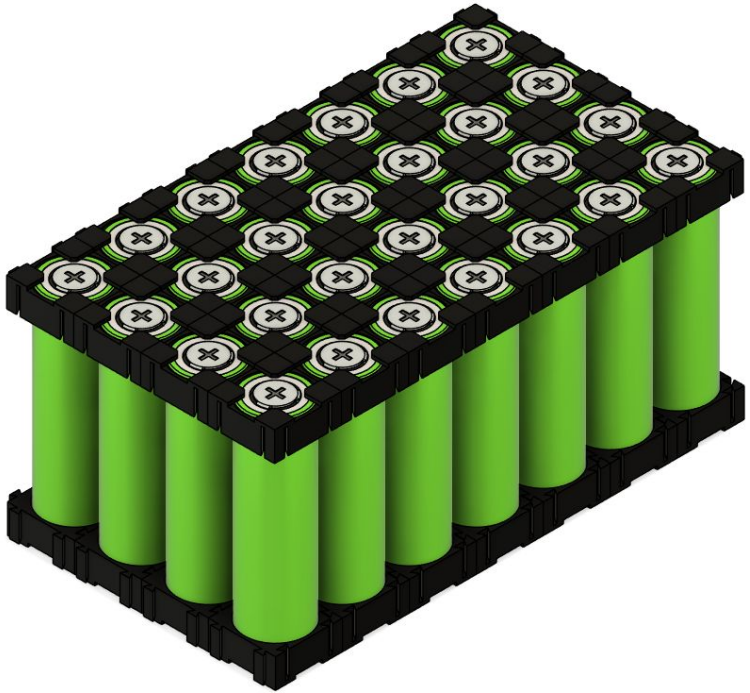

Watch this video to for an example about spot welding parallel and series cells for custom packs: https://www.youtube.com/watch?v=RuA0cUinqzA

Note: Make sure to use 7S4P or even 5P configuration only!!

Step 2: Electronics

Attach the BMS to the battery pack and wire according to the datasheet

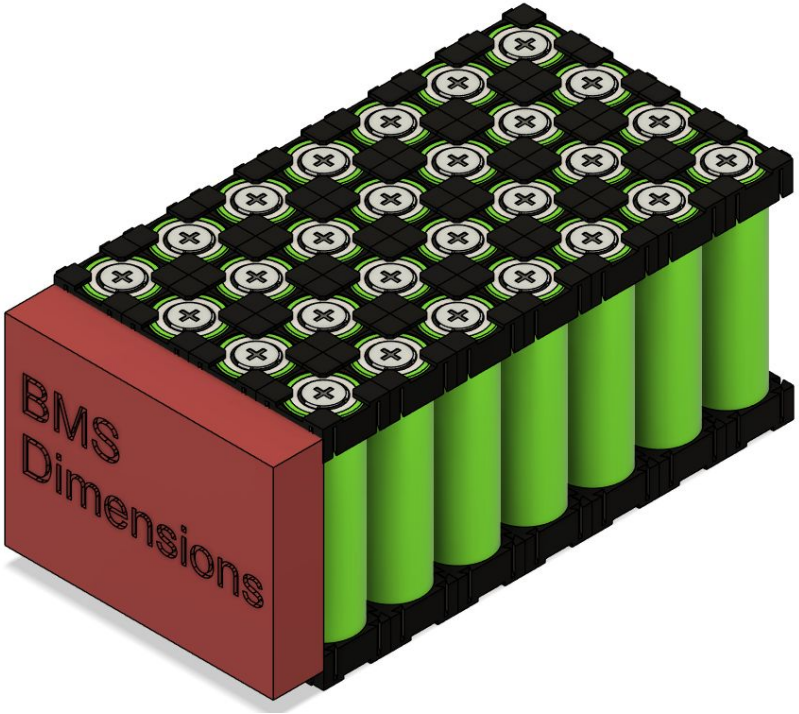

Here is a video by the bms manufacturer on how to wire the battery pack: https://www.youtube.com/watch?v=KX7jc_Q_Cb8

Step 3: Basic frame shape

Place the battery inside the box made by the screw holes

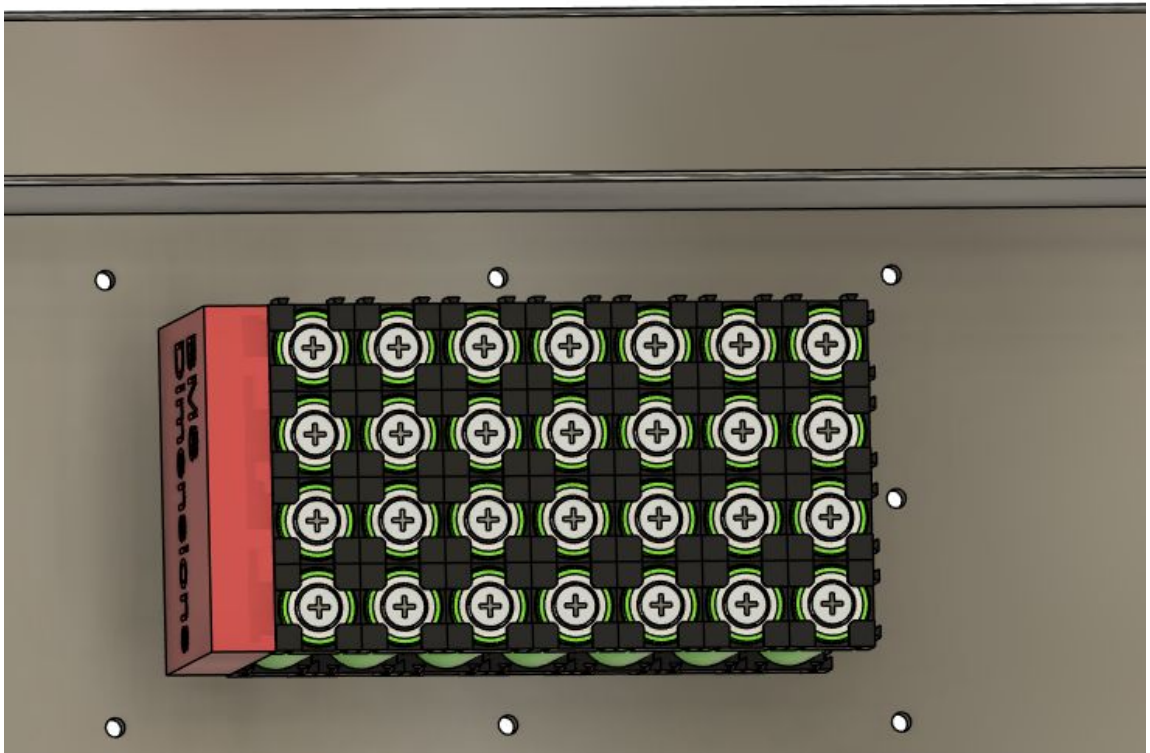

Step 4: Basic frame shape

Screw on the 3d printed battery cover and make sure no water/dust can enter

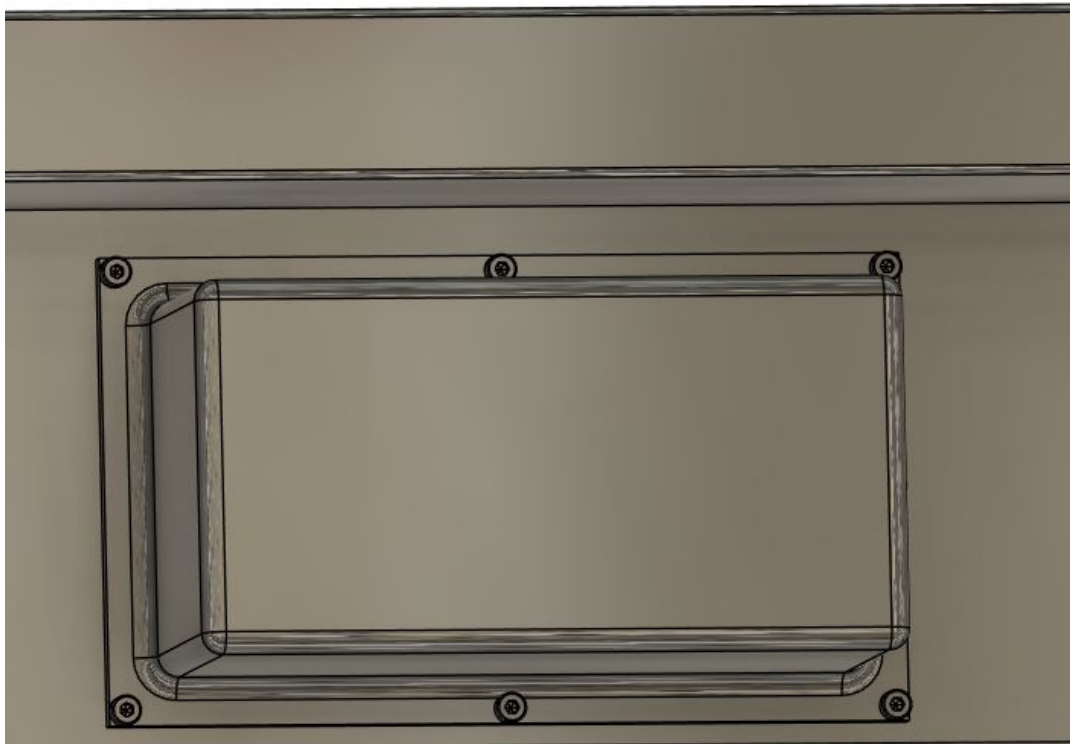

Step 5: Basic frame shape

Mount the other electronics like the motor controller and the throttle and Wire the motor before mounting it.

Step 5: Basic frame shape

Weld anything necessary but it’s recommended to screw the frame so that its repairable

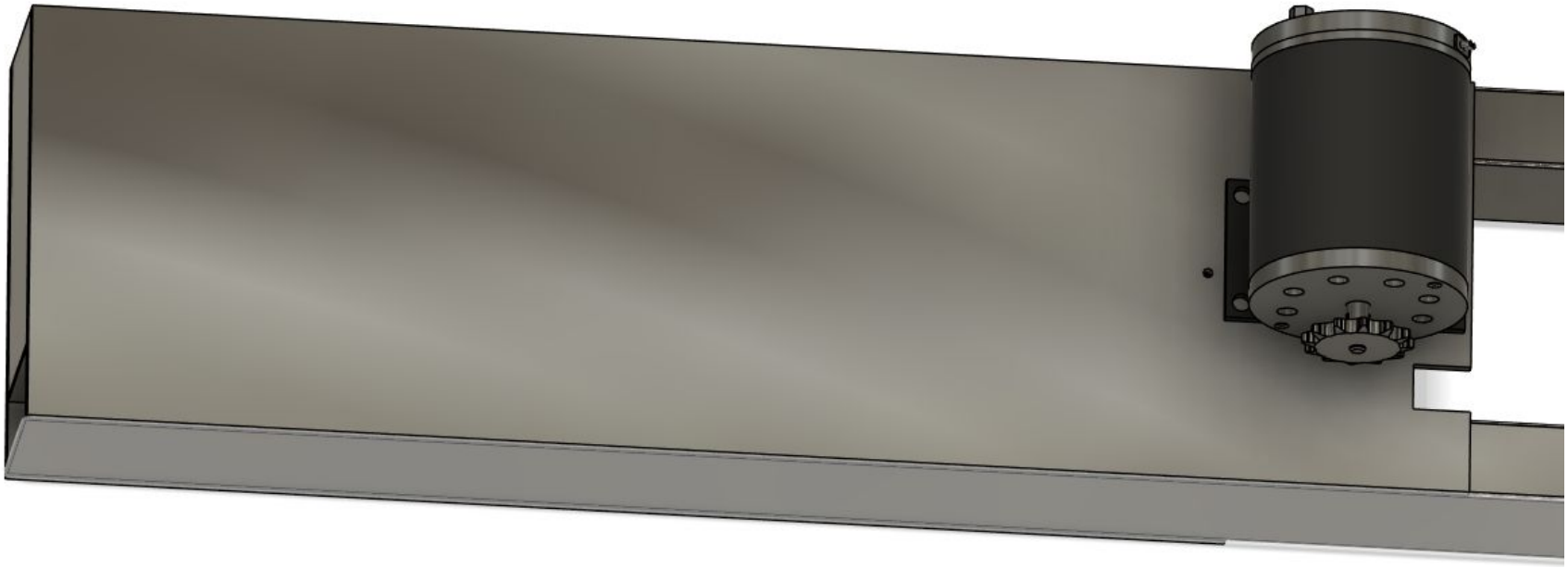

Step 1: Handlebars

Weld the handle support

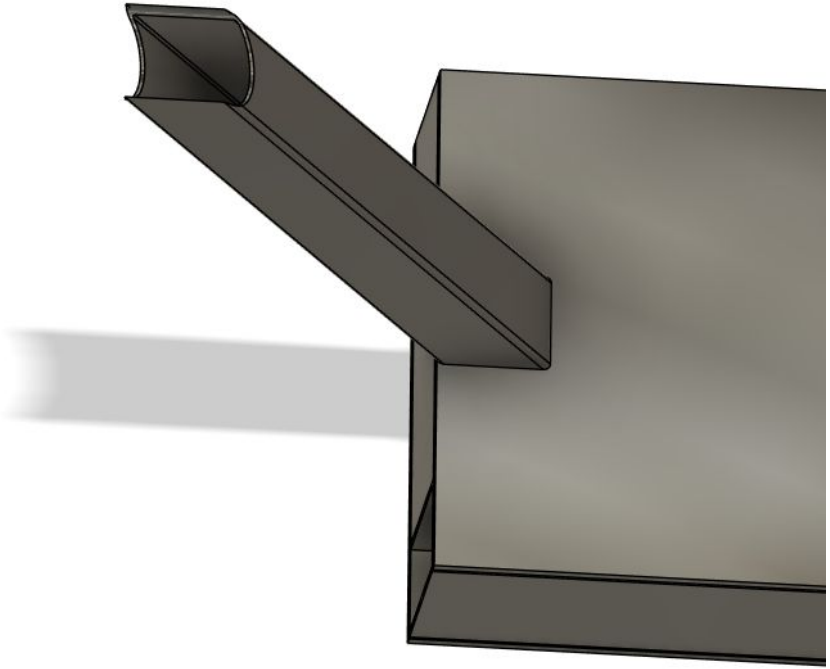

Step 1: Handlebars

Make the T Handlebar shape

Obviously the white handlebars are just for a model but make sure to put the correct electronic ones with a throttle and perhaps a display?

Step 2: Handlebars

Attach the bearings

Just a breif idea but makes more sense in the cad design

Step 3: Handlebars

Hammer the outer pipe which will be connected to the frame.

Just a breif idea but makes more sense
in the cad design

Step 4: Handlebars

Attach it with the other part of the frame!

Now you have an almost done scooter! Remember to also cover the motor with the 3d printable cage so it doesnt cut your leg with the sprocket hehe.

Step 1: Wheels

Assemble the rods and the 3d printed parts(petg)

Both the parts have bearing in them so they can slide with each other for the suspension.

Step 2: Wheels

Slide the suspension springs in the rods

Carefully! Also attach the red 3D printable clips with brass inserts to prevent the suspension from sliding out the rods.

Step 3: Wheels

Add the actual wheel!

The wheel uses a rod to spin on the 3d printed parts.

Step 4: Wheels

The back wheel

Use extra long screws and replace the old ones to attach the custom cnced sprocket. Remember to make a hole for the rod to be welded in the frame.

Step 1: Final stuff

Attach everything together

Weld the back wheel’s axle to the frame, attach the pipe in the hole of front wheel 3d printed parts and you all done!

Step 2: Final stuff

It still wont work now!!

Attach the chain to the sprocket of the motor to the sprocket of the wheel

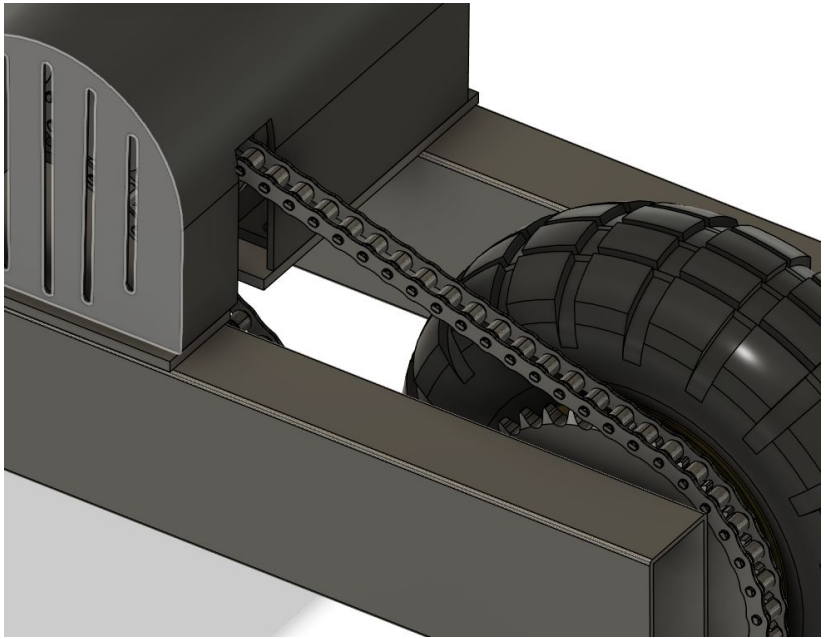

Step 3: Final stuff

Aesthetics are important!
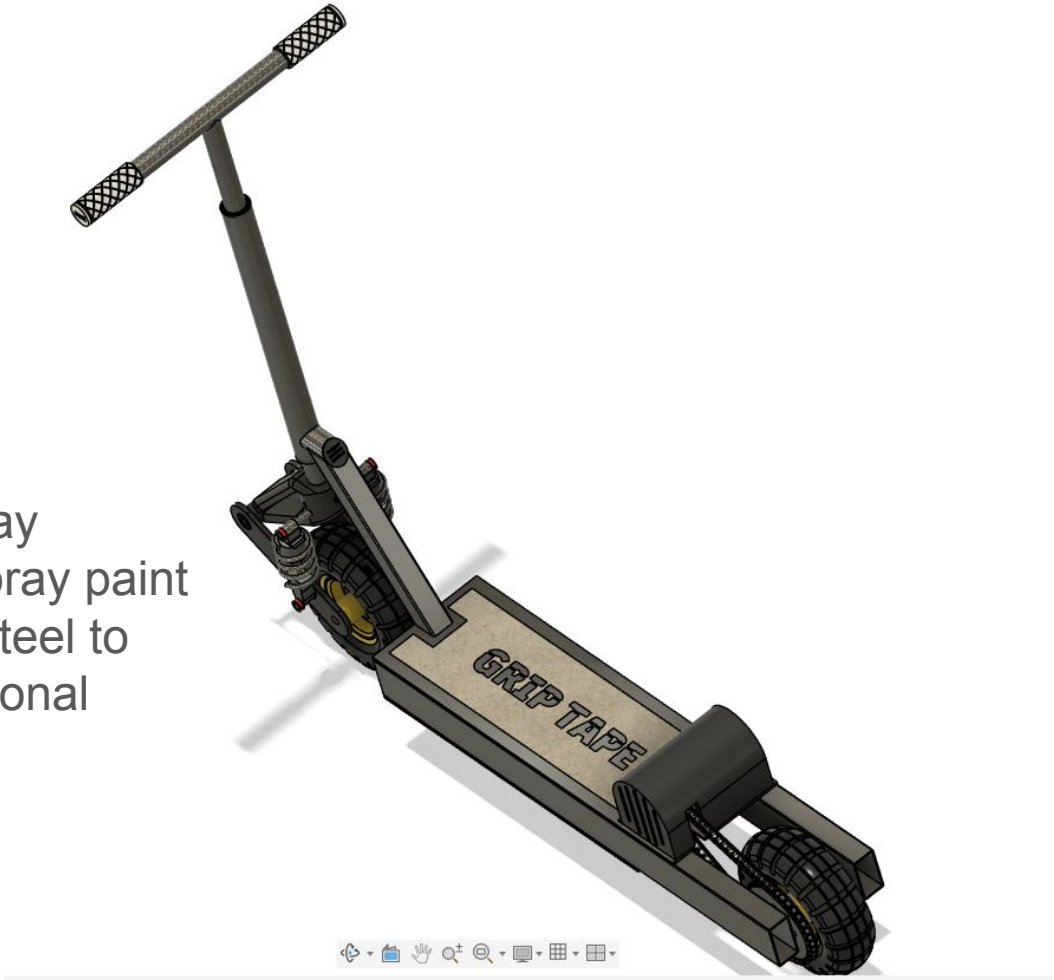
Stick grip tape with custom spray painted designs! And maybe spray paint the body if you are using Mild steel to prevent rust and add a professional look!