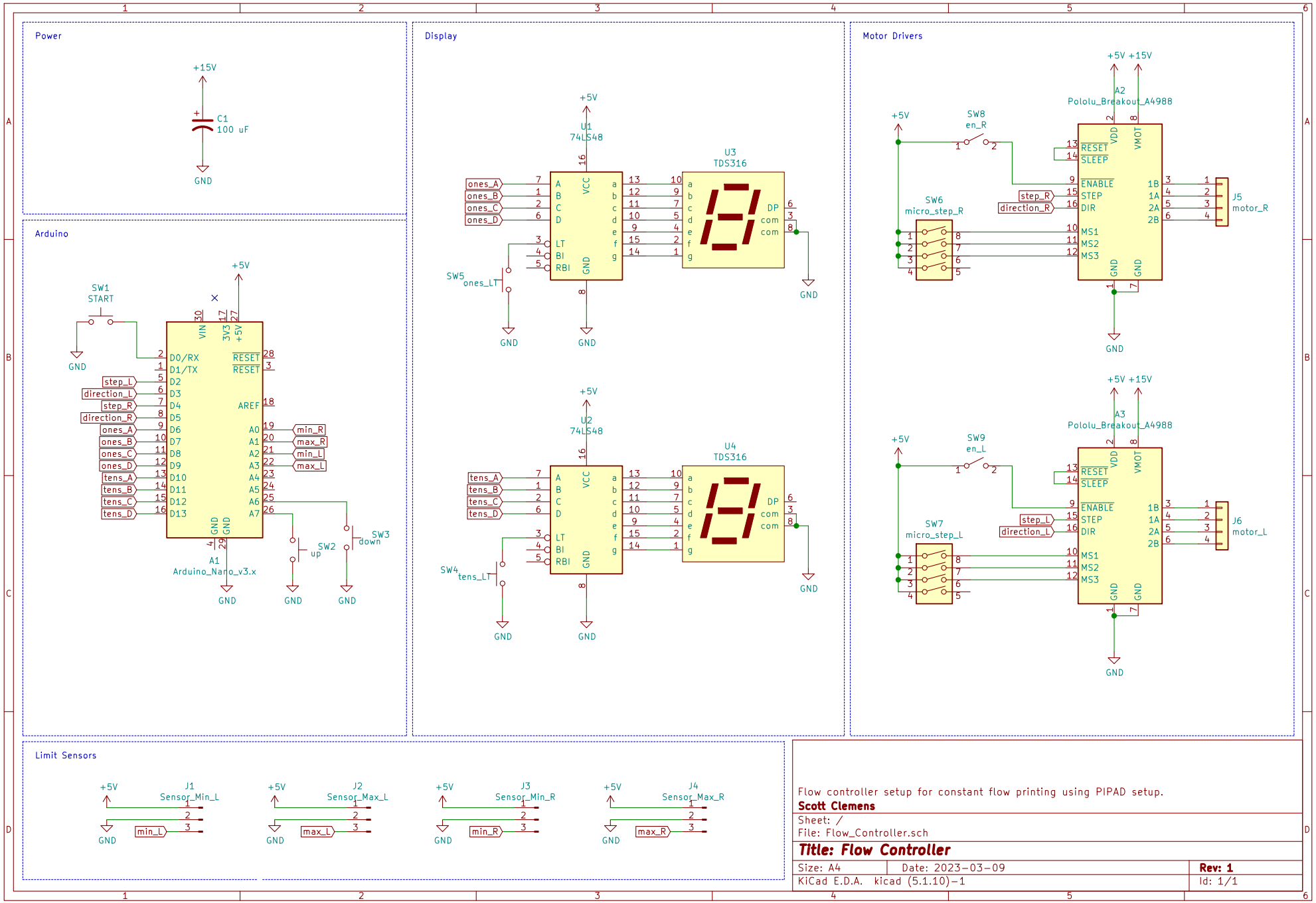

Flow controller setup for constant flow printing using PIPAD setup.

Scott Clemens

Sheet: /

File: Flow_Controller.sch

Title: Flow Controller

Size: A4	Date: 2023-03-09	**Rev: 1**
KiCad E.D.A. kicad (5.1.10)-1		Id: 1/1