Noise Suppression Products/EMI Suppression Filters

Chapter 1

1-1. Introduction

1-2. What is electromagnetic noise interference?

1-3. Noise suppression

1-4. How to use shields and filters

Chapter 2

Chapter 3

Chapter 4

Chapter 5

Chapter 6

Chapter 7

Chapter 8

Chapter 9

Chapter 10

Chapter 11

Chapter 12

Chapter 13

Chapter 1

Reasons for requiring EMI suppression filters (EMIFIL ®)

1-1. Introduction

An EMI suppression filter (EMIFIL ®) is an electronic component for providing electromagnetic noise suppression for electronic devices and is used in conjunction with shields and other protection. This filter only extracts and removes components that can cause electromagnetic noise from electric currents that are conducted through wiring. Chapter 1 describes the reasons for using EMI suppression filters (EMIFIL ®) in electronic devices and also provides an overview of the operations of shields and filters that are typical parts used for electromagnetic noise suppression.

Fig. 1-1 EMI suppression filters (EMIFIL ®)

Top of page

1-2. What is electromagnetic noise interference?

When electronic devices receive strong electromagnetic waves, unwanted electric currents can be induced in the circuit and thus cause unintended operations or interference with the intended operations. If the energy applied from the outside is too powerful, electronic devices can be damaged. Even if the energy applied from the outside is small, if it is mixed with the radio waves used for broadcasting and communication, it can cause loss of reception, abnormal noise in sound, or disrupted video at places where the radio waves for broadcasting and communication are weak. Such interference caused by external electromagnetic waves is called electromagnetic noise interference, and the electromagnetic waves that cause interference are called electromagnetic noise (hereinafter, noise).

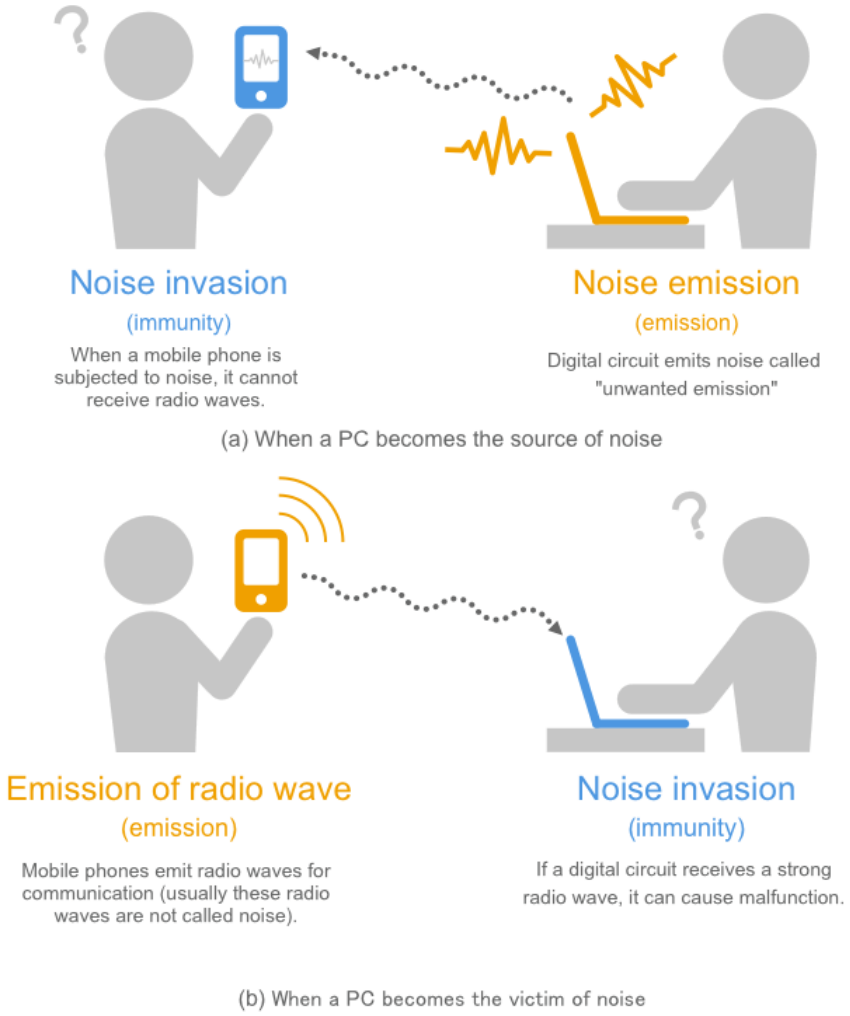

Fig. 1-2 Emission and immunity

Noise can cause interference with various electronic devices. The source of noise also varies. Noise that does not cause any interference with particular appliances (e.g. washing machines and refrigerators) can seriously affect other devices (e.g. AM radios). Therefore, there are rules to suppress the noise generated from electronic devices to a certain level and to make sure that electronic devices operate correctly under a certain noise level so that we can use electronic devices with security. These rules are called noise regulations.
If an electronic device is considered a source of noise, the occurrence of noise is called emission (emission of noise). In contrast, if an electronic device is considered a victim of noise, the tolerance to noise is called immunity (noise tolerance). Noise regulations specify the emission and immunity of electronic devices. (Immunity is also referred to as EMS: ElectroMagnetic Susceptibility)

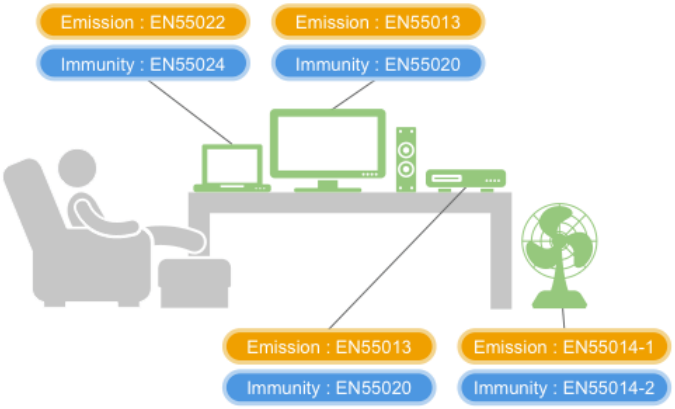

Fig. 1-3 Examples of European noise regulations

1-2-1. Classification of electromagnetic noise

Electromagnetic noises can be classified into natural noises and artificial noises based on the source origin of electromagnetic noise as shown in the figure.
Natural noises are those that existed before the existence of electronic devices, for example, lightning and static electricity. Electronic devices are required to have immunity to natural noises.
Artificial noises are noises that came to be after electronic devices started to be used and are dealt with both emission and immunity. As electronic devices have become more commonly used, the interference caused by artificial noise has increased. This point will be described in detail in the next section.

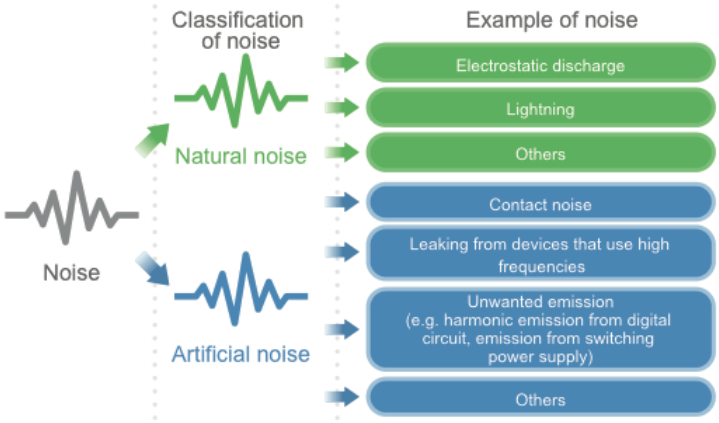

Fig. 1-4 Classification of noise

1-2-2. Change in noise issues due to congestion of electronic devices

The congestion of electronic devices used around our vicinity is increasing, and the content and degree of noise interference are changing as the performance of each electronic device increases. For example, before 1970 (before digital circuits became popular), we were concerned about issues of interference (radio interference) between wireless radios. However, as household digital devices such as personal computers became popular, we became more concerned about receiving interference to the reception of radio and TV by the radio waves generated by those devices.
In general, as the congestion of electronic devices increases, the distance between source and victim is reduced, resulting in an increasing degree of noise interference. In addition, as the performance of electronic devices increases, the operating circuit frequency increases and noises of higher frequencies are generated, resulting in an expanding affected frequency range. Furthermore, due to the power saving capability of electronic devices, more circuits can operate with a lower voltage, resulting in more cases of being affected by noise with less energy.
With the further increase in congestion and performance and the downsizing of electrical devices, the issue of noise interference is expected to become more serious.

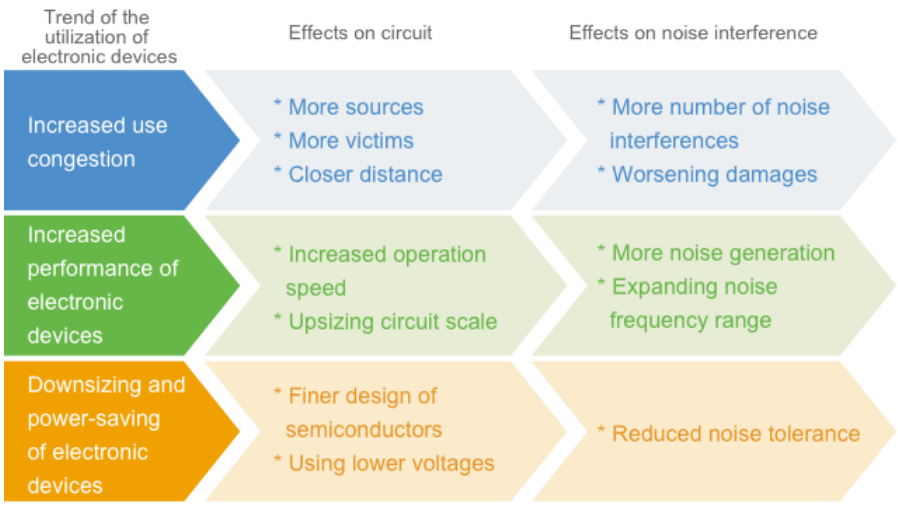

Fig. 1-5 Expanding use of electronic devices and effects on noise issues

1-2-3. "Intra-system EMC", the autointoxication of an electronic device

Noise interference can occur to electronic devices without any external noise. Noise generated from a circuit inside an electronic device can cause interference with another circuit in the same electronic device. This is called intra-system EMC. For example, if a mobile phone has a built-in digital circuit, noise from the digital circuit can degrade the receiver performance of the mobile phone (reducing the receiver sensitivity) as shown in the figure below. In such a case, the distance between the noise source origin and the victim is significantly smaller than those of general noise interferences, causing more serious interference. Depending on the case, noise suppression is provided on a level far stricter than the limit of noise regulations.

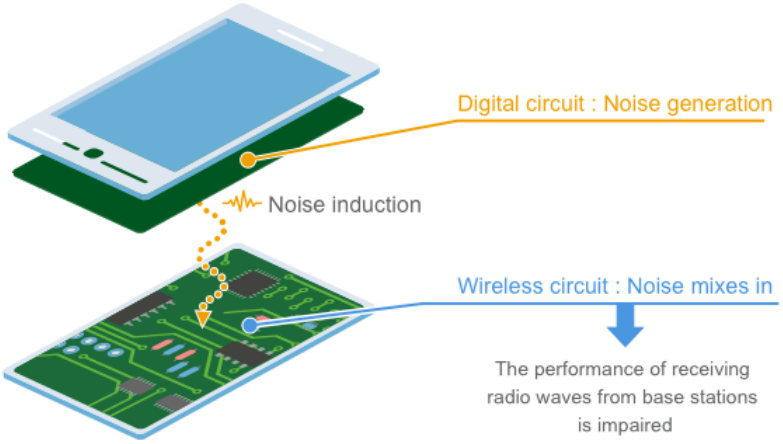

Fig. 1-6 Example of intra-system EMC

Top of page

1-3. Noise suppression

Noise interference occurs when three factors (noise source, victim and transmission path) exist as indicated by the principle diagram in Fig. 1-7. Noise interference can be eliminated if you can eliminate one of these factors.
Therefore, you can take measures on the noise source origin side or on the victim side. For example, if you do not use digital circuits, switching power supplies or transmitters (e.g. incandescent lamps), the noise generated from the electronic devices will be very small. Another example would be setting up redundancy processing in software on the victim side.
So, even if the information is slightly altered, the signal can be recovered. These measures can be fundamental solutions. But, many such cases can cause large secondary effects like significantly reducing the performance of electronic devices or increasing their size, making such measures unrealistic.

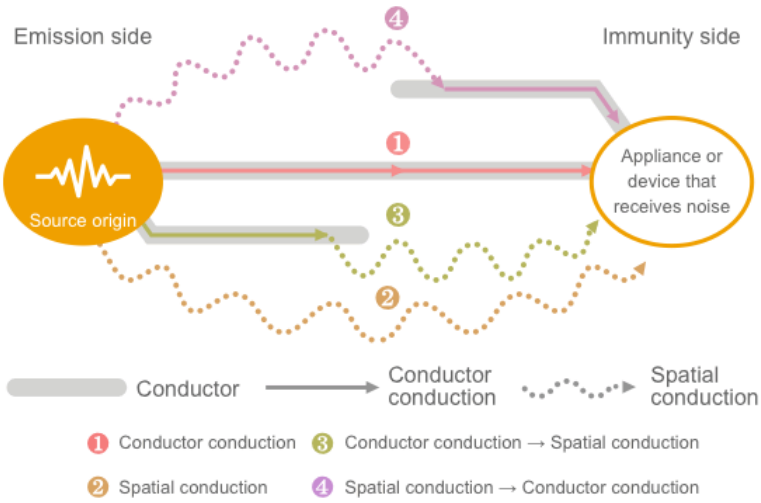

Fig. 1-7 Principle of noise interference

Usually, noise is shut out in the transmission path as shown in Fig. 1-8. There are two types of noise conduction (spatial conduction and conductor conduction). As shown in the figure, the spatial conduction is dealt with by shields, while the conductor conduction is dealt with by filters.
As shown in Fig. 1-7, spatial conduction and conductor conduction have a tendency of mutual transformation through a wire that works as an antenna. Therefore, even if conductor conduction is only a problem at one location, you cannot completely ignore the possibility of spatial conduction.

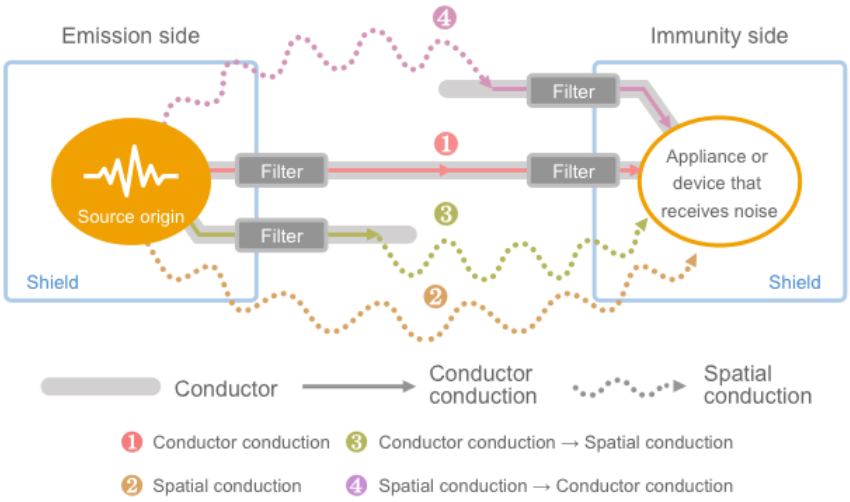

Fig. 1-8 Measures for noise suppression

1-3-1. Shields

Shields refer to surrounding electromagnetic fields being shut out by enclosing the target object with a metal plate or other protection as shown in Fig. 1-9.
Although the effects of shields generally depend on the conductivity, magnetic permeability and thickness of the material used, the noise suppression for general electronic devices can achieve sufficiently large effects with a very thin metal plate such as aluminum foil. You must be aware that the effects of the noise suppression for electronic devices often depend on the connection method for forming an enclosure (gaps, contact resistance etc.) rather than the material specifications.
When making openings in the shield for heat release, limiting the maximum size of each opening is more important than limiting the total area of the openings. As shown in Fig. 1-10, if there is an elongated opening or slit, this part can work as a slit antenna (especially for high-frequency range where the length l in the figure exceeds 1/2 of the wave-length) and the radio waves can go in and out the shield. In order to prevent this, the individual openings should be kept small. From this viewpoint, plate materials with many small holes such as punched metal and expanded metal are good materials for both ventilation and shielding.

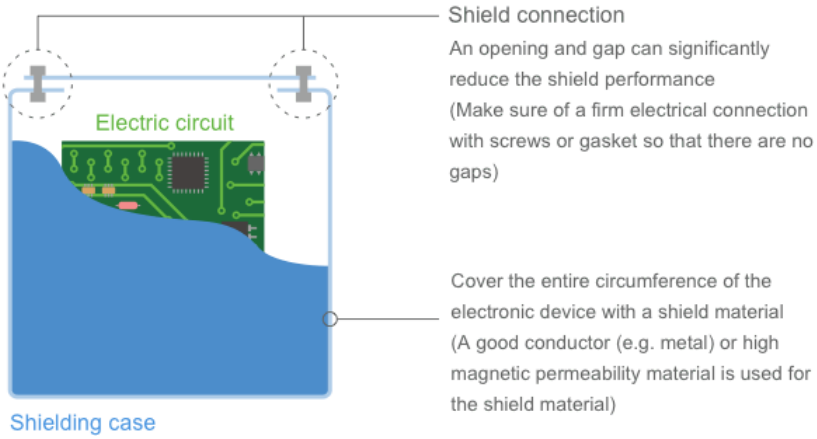

Fig. 1-9 Shield

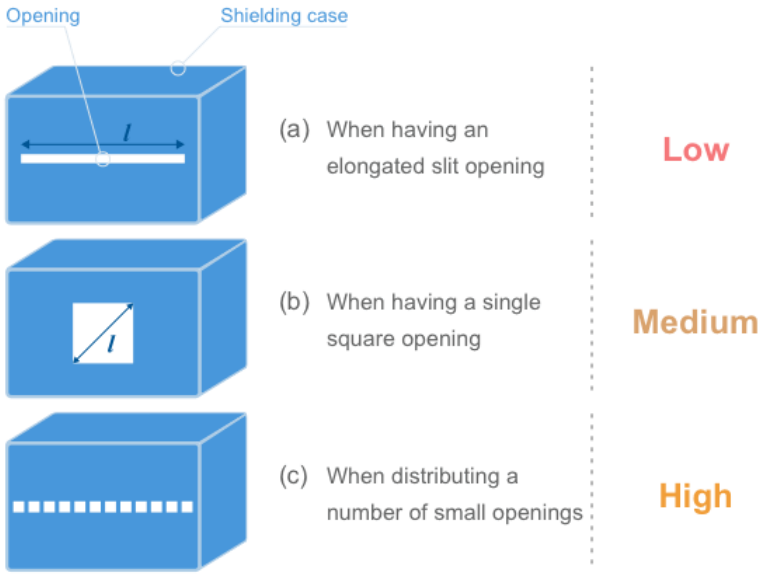

Fig. 1-10 Examples of different shielding effects by three different opening shapes with the same area
(It is assumed that high frequency noise is confined by the electromagnetic shield.
In some cases (e.g. electromagnetic shield etc.), this order may not be applicable)

1-3-2. Filters

Filters refer to a part or function that can let the necessary components through and remove unwanted components among the electric current flowing in conductors. Although the noise is diverted to ground in Fig. 1-12, the noise energy can be alternatively absorbed inside the parts or can be returned to the noise source origin (increasing the impedance).

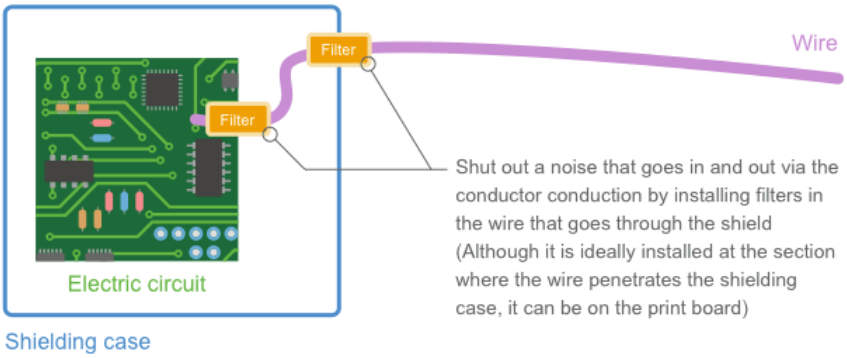

Fig. 1-11 Filter

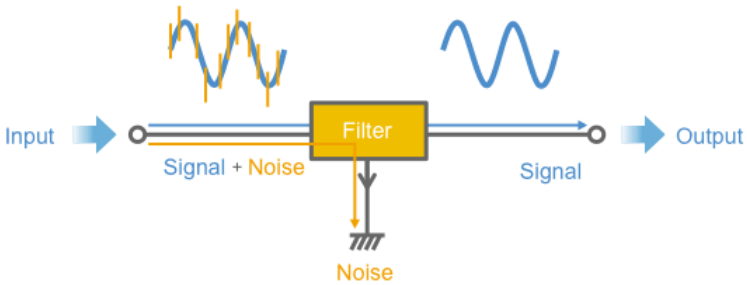

Fig. 1-12 How a filter works

Since noise tends to be distributed more in a relatively higher frequency range as shown in Fig. 1-13, the noise suppression for electronic devices usually uses low-pass filters that remove high-frequency components. You can use general-purpose parts such as inductors (coils), resistors and capacitors for this low-pass filter. However in order to completely shut out noise, a dedicated component, an EMI suppression filter, is used. EMI suppression filters will be described in detail in Chapter 3 of this document.

Apart from these filters that take advantage of uneven frequency distribution of noise, there are filters that take advantage of the voltage difference (varistors etc.) and filters that take advantage of the conduction mode difference (common mode choke coils etc.).
In addition to these filters, transformers, optical cables or optical isolators may be used as a kind of filter. Although these components can achieve exceptional denoising effects in some cases, the applicable situations are limited.

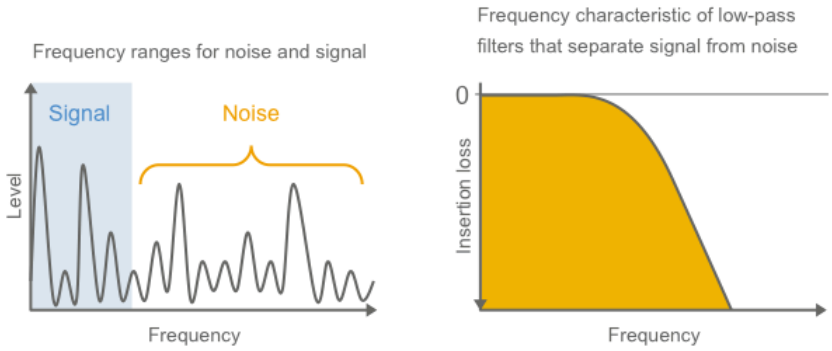

Fig. 1-13 Separation of noise by low-pass filters

Top of page

1-4. How to use shields and filters

1-4-1. Use shields and filters at one point

Filters are used for noise that conducts through conductors, while shields are used for noise that conducts through space. However, since the conductor through which noise conducts can also work as an antenna, these two types of conductions are mutually transformed into each other via the conductor as an antenna. Therefore, in order to completely shut out noise, both filters and shields need to be used at one location.
For example, when a shield is used for shutting out spatial conduction, if there is a conductor that penetrates through the shield as shown in Fig. 1-14, this conductor picks up and draws the noise inside the shield to the outside of the shield causing noise emission. As a result, spatial conduction cannot be completely shut out solely with a shield.
Likewise, when a filter is used for shutting out conductor conduction, the wires before and after the filter may be coupled with each other via spatial conduction as shown in Fig. 1-15. As a result, the conductor conduction cannot be completely shut out solely with a filter.

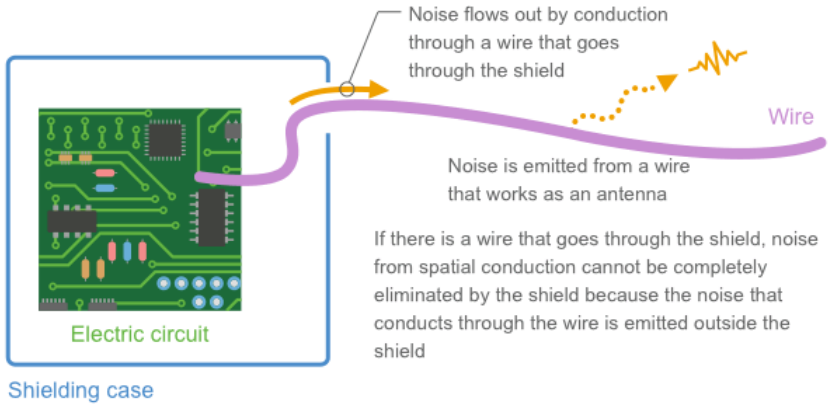

Fig. 1-14 Conductor conduction causes loophole in a shield

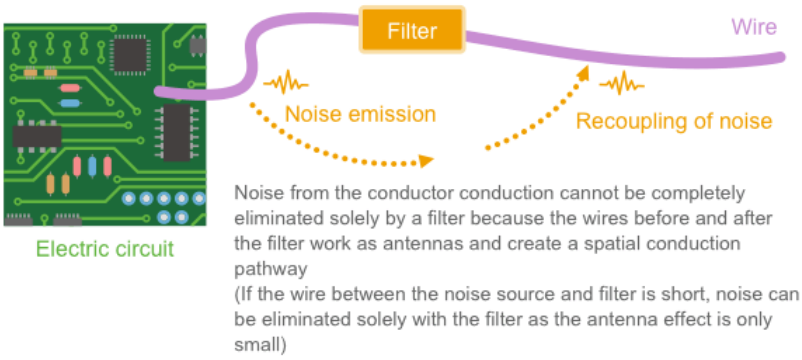

Fig. 1-15 Filter is bypassed by spatial conduction

When using both a shield and filter together at one location as shown in Fig. 1-16, both spatial conduction and conductor conduction are completely shut out allowing complete noise elimination. If the length of the conductor between the noise source and filter is significantly short as shown in Fig. 1-17, the effect of the conductor as an antenna can be ignored and the noise can be thus eliminated only with a filter to a certain extent. Therefore, if you can use a filter at a close vicinity to the noise source, the noise suppression can be achieved only with a filter.

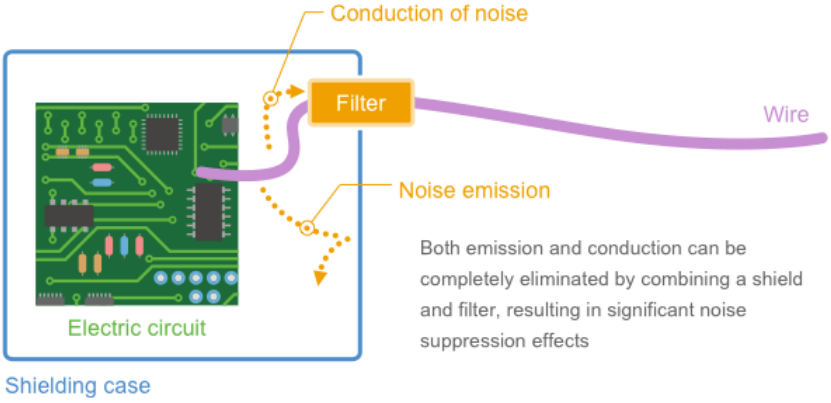

Fig. 1-16 Noise can be shut out by the combination of a filter and shield

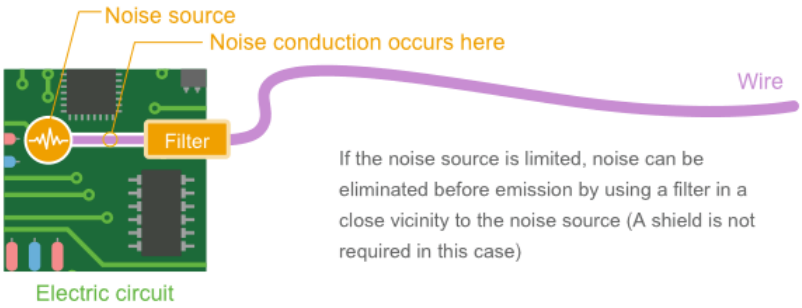

Fig. 1-17 If conductor is short, noise suppression can be achieved only with a filter

1-4-2. Filters and ground

In order to effectively use filters and shields, it is generally necessary to have a connection with good ground.
If there is a built-in bypass capacitor inside the filter, ground becomes a route to return the noise current back to the noise source as shown in Fig. 1-18. You need to consider keeping the impedance of this part very low.
If the impedance to ground is large as shown in Fig. 1-19(a), some voltage appears at ground due to the noise current interfering with good noise elimination. If this ground is shared with another wire attached to another filter, the voltage appeared at ground can go back to other wires through the filter capacitor.
This type of noise coupling through the impedance of ground is called common impedance

coupling. This status of having noise on ground is also referred to as the occurrence of common mode noise. Common mode noise will be described in a later chapter. The common impedance coupling is one of the mechanisms that cause common mode noise.
Since the effect of filters that have built-in capacitors are highly susceptible to the conditions of the connected ground, you need to use a stable ground with a low impedance.

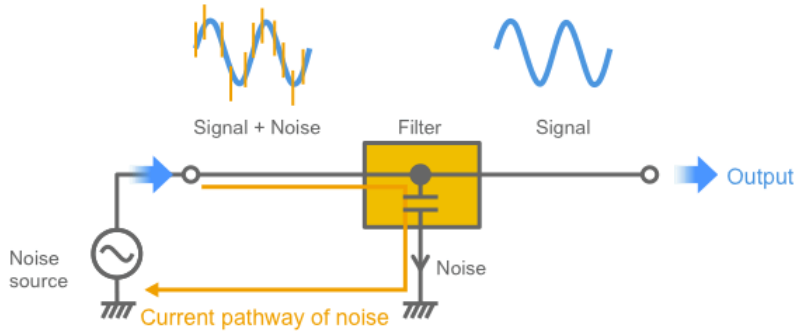

Fig. 1-18 Current pathway of noise

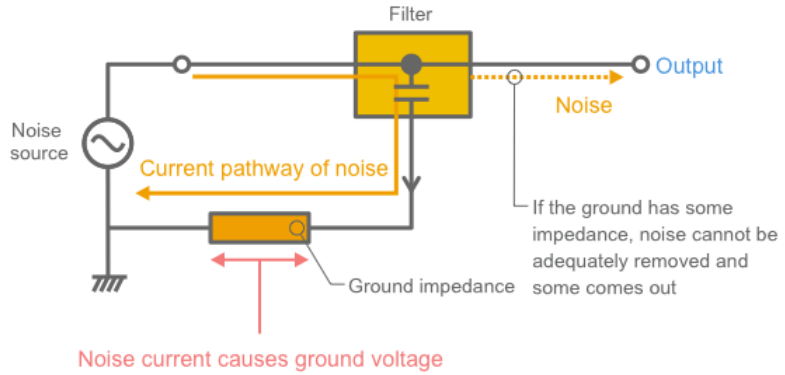

(a) Effect on noise reduction performance

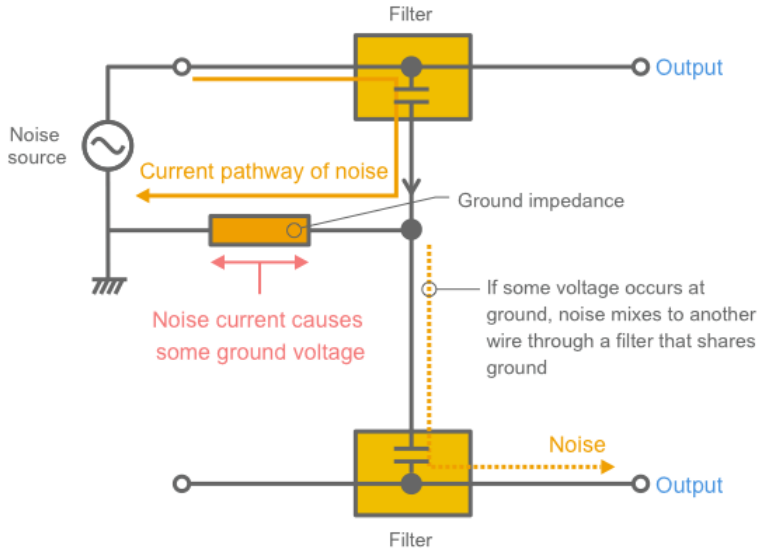

(b) Noise coupling through ground

Fig. 1-19 Effect of impedance in ground

1-4-3. Shields and ground

Shield also need ground.
Static shields must be connected to ground that is in principle an external earth (zero volts). Since an electrical current flows on the wire connected to ground in accordance with the change in the electric field to be shielded, the wire needs to have a low impedance.
In many cases, when using shielded cables, the shield also works as a return pathway for the current that has gone through the inner conductor (such as the outer conductor of coaxial cable for example). Therefore it needs to be connected to ground that can return this current (when shielding a signal, connect to the circuit ground).
In cases where the noise has been guided to ground as is the case of Fig. 1-19, if shields are connected to this ground, the shield draws out and then emits the noise from ground working just like as an antenna, which could increase the noise. When connecting shields, you need to choose a low impedance ground with a stable potential.
Enclosure shielding cases practically work as a relatively good ground. If there is a shielding case that covers the entire device, this shielding case itself can be a good ground for the purpose of noise suppression even though it is not connected to earth (if the discharge current needs to be drained to earth for the purpose of suppressing static electricity or other currents, it needs to be connected to earth). Here, we call this ground an enclosure shield ground.
This enclosure shield ground can also be used as ground for the shielded cables. However, in order to make this shield work as a return pathway for signals as described above, it also needs to be connected with the circuit ground. Therefore, if the enclosure shield ground and the circuit ground have been separated, the connection gets complicated.

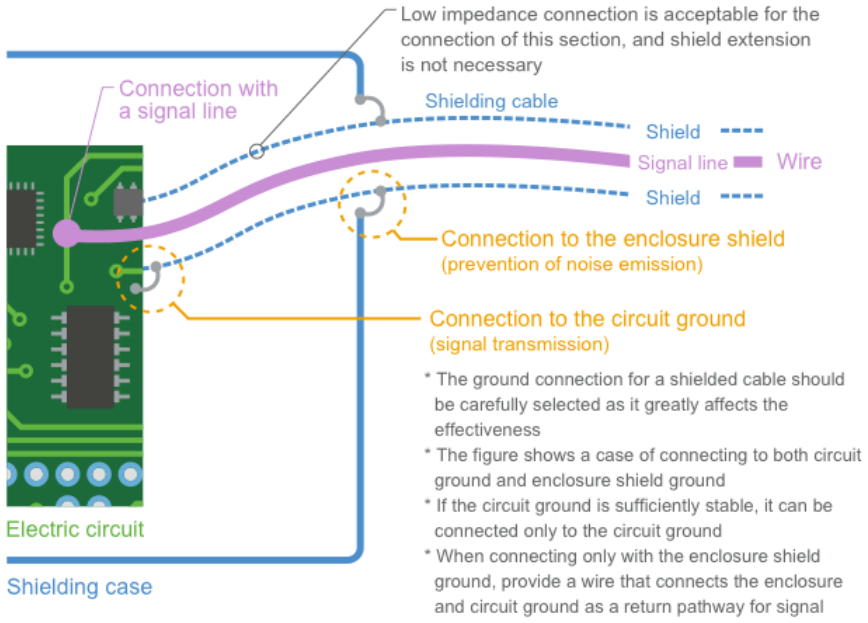

Fig. 1-20 shows an example of ground connection for shielded cables.

1-4-4. Reinforcement of ground

As described above, connecting to a stable ground is necessary for enhancing the effect of filters and shields. In addition, when using a shielding case that covers the entire device, this shielding case itself can be used as a stable ground. Therefore, shields generally have a function to stabilize ground.
If there is a wire that goes through this shielding case, you are providing a hole that allows noise going in and out of the shield as shown in Fig. 1-14 making the shielding case ground unstable. In such a case, you can use filters in this wire to stop noise from going in and out so that the shielding case ground can be stabilized.
Since appropriately applied shields and filters will work for stabilizing ground as described above, there is a mutually helpful relationship between shields, filters and ground.
Circuit ground is also a type of ground apart from the above-described shielding case ground and often induces more noise voltage than the shielding case ground does. This kind of ground is called "dirty ground." In contrast, a ground where noises are not induced is called "clean ground."
It is desirable that ground to which shields or filters are connected is a clean ground. However, a circuit ground connection is required to return the signal return current or to return the noise current back to the noise source origin. If the circuit ground is dirty, the noise voltage should be minimized by reducing the impedance of the circuit ground, providing a ground plane along the circuit board, or connecting with the enclosure shield ground.
The operation of stabilizing the ground noise by reducing the voltage in this manner is referred to as

"ground reinforcement." Covering a part of the circuit board with a shielding case helps the ground reinforcement. Fig. 1-21 shows some of the methods for ground reinforcement.

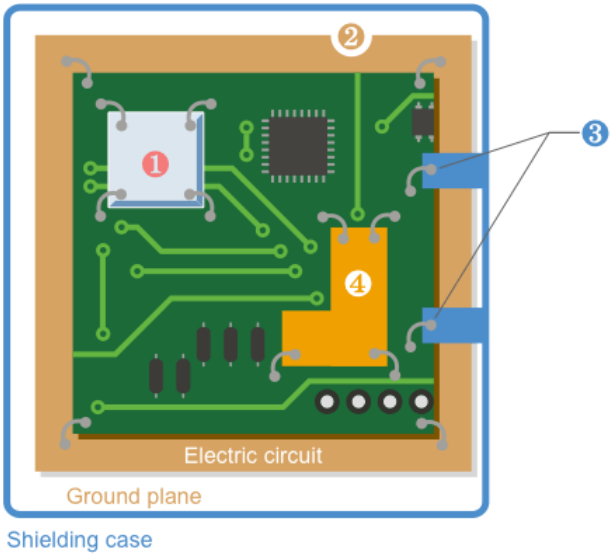

1. Cover the top of a circuit that causes strong noise with a metal case, and connect it to ground
2. Put a metal plate (referred to as a ground plane) under the circuit board and connect it to the circuit ground at several points
3. Connect to a stable ground such as the enclosure shield ground etc. at a low impedance (not with wire, but directly with metal fittings etc.)
4. Connect narrow or diverted ground sections with a short and thick wire (lowering the ground impedance)

* in the figure indicates a connection to the circuit ground

Fig. 1-21 Example of ground reinforcement

1-4-5. Filters and ground

When connecting cables to the shielding case, filters are attached to prevent noise from going in and out through the cables. Ground of this filter is to be formed on the circuit board. However, in order to stabilize ground, it is often connected to the shielding case ground instead of the circuit ground. Therefore, ground for filters that are connected to the shielding case ground is often created at the section where the cables are attached. Here, we call this ground a "filter ground."
In general, a filter ground is not only connected to a shielding case ground but also connected to a circuit ground in order to return the noise generated inside the circuit to the noise source. In this case, it also works for ground reinforcement for the circuit ground at the same time. When using shielded cables, the shield can be connected to the filter ground. In this case, it must be connected to the shielding case ground at a very low impedance as the effectiveness of shielded cables depend on the quality of the filter ground.
Fig. 1-22 shows an example of a filter ground. It is important to keep the filter ground at a very low impedance with reference to the shielding case ground.
Although Section 1-4-2 has explained that ground of the filter is to be connected to the noise source at a low impedance (with reference to the circuit ground), Fig. 1-22 shows that the connection to the shielding case ground is given a priority. This is because it is practically difficult to return to the noise source at a low impedance as the connection point of cables are usually far from the noise source. It is also because it is hard to get a good result by connecting the filter ground at a low impedance as the circuit ground is often dirty due to noise from other circuits.
Therefore, when using a filter for a single circuit at a close vicinity to the noise source, the filter is connected to the circuit ground as explained in Section 1-4-2. However, this connection is not easily achieved when the noise source is far away (such as a case of cable junction) and two or more noise sources need to be considered. As a practical technique, when using filters at a cable junction, you can find a stable ground such as a shielding case ground as shown in Fig. 1-22 and connect the filter ground.

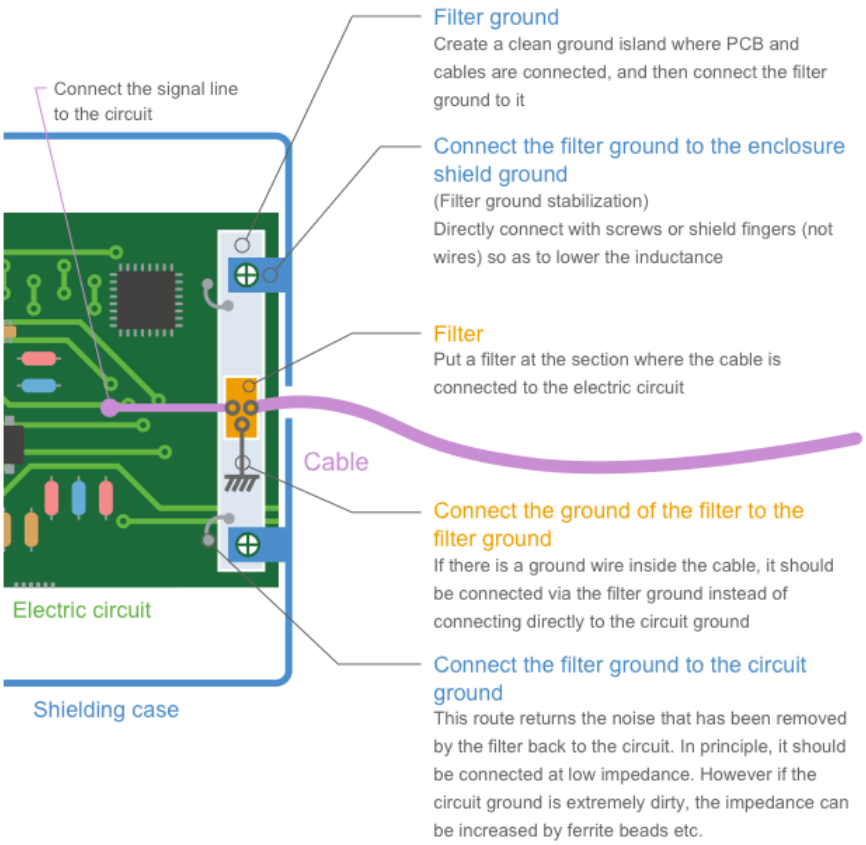

Fig. 1-22 Example of connection using a filter ground

Top of page

Chapter 1 - Key points

An electromagnetic wave that interferes with the operation of electronic devices is called noise.

The means to shut out the noise in the transmission path include shields and filters.

In order to make shields and filters work effectively, grounding is important.

Recommended Contents

EMI Suppression Filters (EMC and Noise Suppre

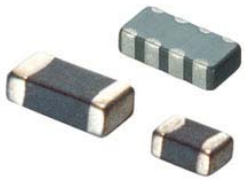

Chip Ferrite Beads

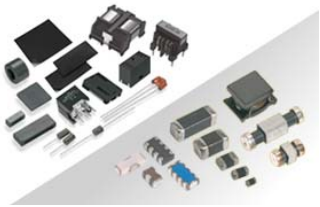

Noise Suppression Products

Noise suppression has become an important issue, particularly with regard to electromagnetic interference (EMI) and electromagnetic compatibility (EMC).
Murata provides you with total

Read more

BL□ Series

Read more

Murata offers components for noise suppression from various approaches, such as small-sized EMI suppression filters and AC line filters which efficiently suppress noise, ferrite cores and microwave ...

Read more