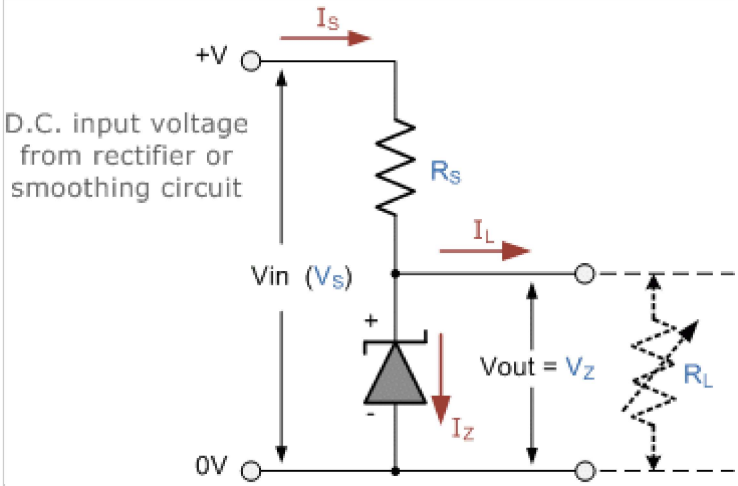

The Zener Diode

A Semiconductor Diode blocks current in the reverse direction, but will suffer from premature breakdown or damage if the reverse voltage applied across becomes too high

However, the **Zener Diode** or “Breakdown Diode”, as they are sometimes referred too, are basically the same as the standard PN junction diode but they are specially designed to have a low and specified **Reverse Breakdown Voltage** which takes advantage of any reverse voltage applied to it.

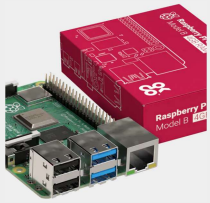

RASPBERRYPI4 4GB | 4 Model B

Raspberry Pi 4 Model B with board 4GB LPDDR4 SDRAM

The **Zener diode** behaves just like a normal general-purpose diode consisting of a silicon PN junction and when biased in the forward direction, that is Anode positive with respect to its Cathode, it behaves just like a normal signal diode passing the rated current.

Buy from Arrow.com

However, unlike a conventional diode that blocks any flow of current through itself when reverse biased, that is the Cathode becomes more positive than the Anode, as soon as the reverse voltage reaches a pre-determined value, the zener diode begins to conduct in the reverse direction.

This is because when the reverse voltage applied across the zener diode exceeds the rated voltage of the device a process called *Avalanche Breakdown* occurs in the semiconductor depletion layer and a current starts to flow through the diode to

We use cookies on our website to give you the most relevant experience by remembering your preferences and repeat visits. By clicking “Accept All”, you consent to the use of ALL the cookies. However, you may visit "Cookie Settings" to provide a controlled consent.

Cookie Settings Accept All

The point at which the zener voltage triggers the current to flow through the diode can be very accurately controlled (to less than 1% tolerance) in the doping stage of the diodes semiconductor construction giving the diode a specific *zener breakdown voltage*, (V_Z) for example, 4.3V or 7.5V. This zener breakdown voltage on the I-V curve is almost a vertical straight line.

Zener Diode I-V Characteristics

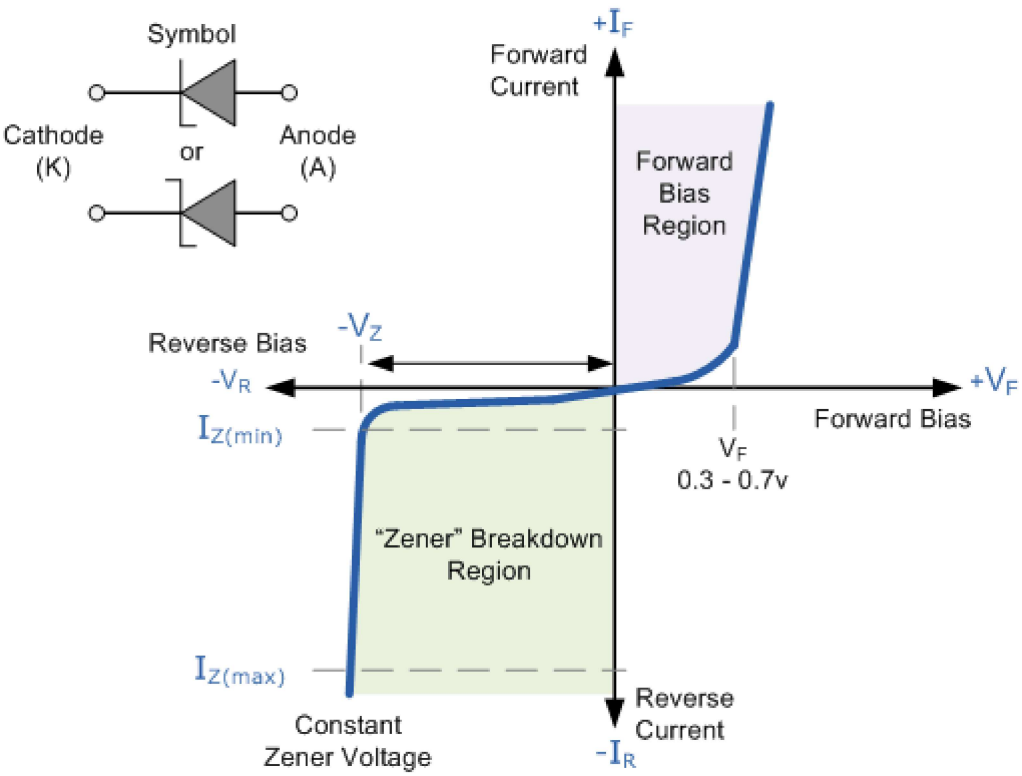

The **Zener Diode** is used in its "reverse bias" or reverse breakdown mode, i.e. the diodes anode connects to the negative supply. From the I-V characteristics curve above, we can see that the zener diode has a region in its reverse bias characteristics of almost a constant negative voltage regardless of the value of the current flowing through the diode.

This voltage remains almost constant even with large changes in current providing the zener diodes current remains between the breakdown current $I_{Z(min)}$ and its maximum current rating $I_{Z(max)}$.

This ability of the zener diode to control itself can be used to great effect to regulate or stabilise a voltage source against supply or load variations. The fact that the voltage across the diode in the breakdown region is almost constant turns out to be an important characteristic of the zener diode as it can be used in the simplest types of voltage regulator applications.

The function of a voltage regulator is to provide a constant output voltage to a load connected in parallel with it in spite of the ripples in the supply voltage or variations in the load current. A zener diode will continue to regulate its voltage until the diodes holding current falls below the minimum $I_{Z(min)}$ value in the reverse breakdown region.

The Zener Diode Regulator

Zener Diodes can be used to produce a stabilised voltage output with low ripple under varying load current conditions. By

We use cookies on our website to give you the most relevant experience by remembering your preferences and repeat visits. By clicking "Accept All", you consent to the use of ALL the cookies. However, you may visit "Cookie Settings" to provide a controlled consent.

Cookie Settings Accept All

Zener Diode Regulator

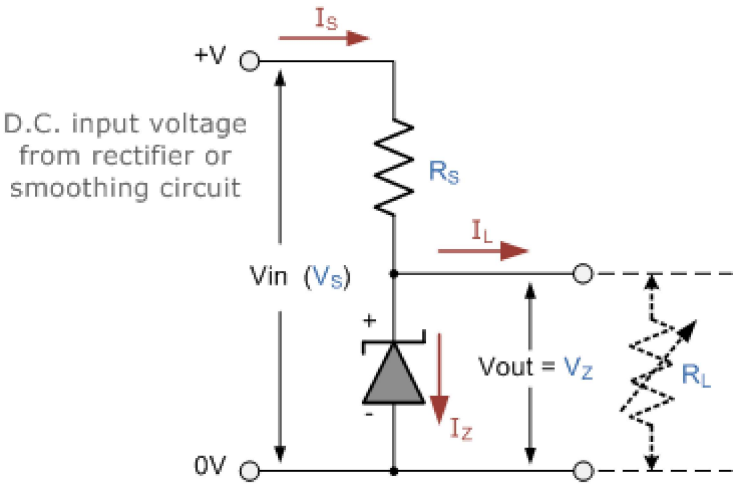

Resistor, R_S is connected in series with the zener diode to limit the current flow through the diode with the voltage source, V_S being connected across the combination. The stabilised output voltage V_{out} is taken from across the zener diode.

The zener diode is connected with its cathode terminal connected to the positive rail of the DC supply so it is reverse biased and will be operating in its breakdown condition. Resistor R_S is selected so to limit the maximum current flowing in the circuit.

With no load connected to the circuit, the load current will be zero, ($I_L = 0$), and all the circuit current passes through the zener diode which in turn dissipates its maximum power.

Also a small value of the series resistor R_S will result in a greater diode current when the load resistance R_L is connected and large as this will increase the power dissipation requirement of the diode so care must be taken when selecting the appropriate value of series resistance so that the zener's maximum power rating is not exceeded under this no-load or high-impedance condition.

The load is connected in parallel with the zener diode, so the voltage across R_L is always the same as the zener voltage, ($V_R = V_Z$).

There is a minimum zener current for which the stabilisation of the voltage is effective and the zener current must stay above this value operating under load within its breakdown region at all times. The upper limit of current is of course dependant upon the power rating of the device. The supply voltage V_S must be greater than V_Z.

One small problem with zener diode stabiliser circuits is that the diode can sometimes generate electrical noise on top of the DC supply as it tries to stabilise the voltage. Normally this is not a problem for most applications but the addition of a large value decoupling capacitor across the zener's output may be required to give additional smoothing.

Then to summarise a little. A zener diode is always operated in its reverse biased condition. As such a simple voltage regulator circuit can be designed using a zener diode to maintain a constant DC output voltage across the load in spite of variations in the input voltage or changes in the load current.

The zener voltage regulator consists of a current limiting resistor R_S connected in series with the input voltage V_S with the

We use cookies on our website to give you the most relevant experience by remembering your preferences and repeat visits. By clicking "Accept All", you consent to the use of ALL the cookies. However, you may visit "Cookie Settings" to provide a controlled consent.

Cookie Settings Accept All

a). The maximum current flowing through the zener diode.

$$\text{Maximum Current} = \frac{\text{Watts}}{\text{Voltage}} = \frac{2w}{5v} = 400mA$$

b). The minimum value of the series resistor, R_S

$$R_S = \frac{V_S - V_Z}{I_Z} = \frac{12 - 5}{400mA} = 17.5\Omega$$

c). The load current I_L if a load resistor of $1k\Omega$ is connected across the zener diode.

$$I_L = \frac{V_Z}{R_L} = \frac{5v}{1000\Omega} = 5mA$$

d). The zener current I_Z at full load.

$$I_Z = I_S - I_L = 400mA - 5mA = 395mA$$

Zener Diode Voltages

As well as producing a single stabilised voltage output, zener diodes can also be connected together in series along with normal silicon signal diodes to produce a variety of different reference voltage output values as shown below.

Zener Diodes Connected in Series

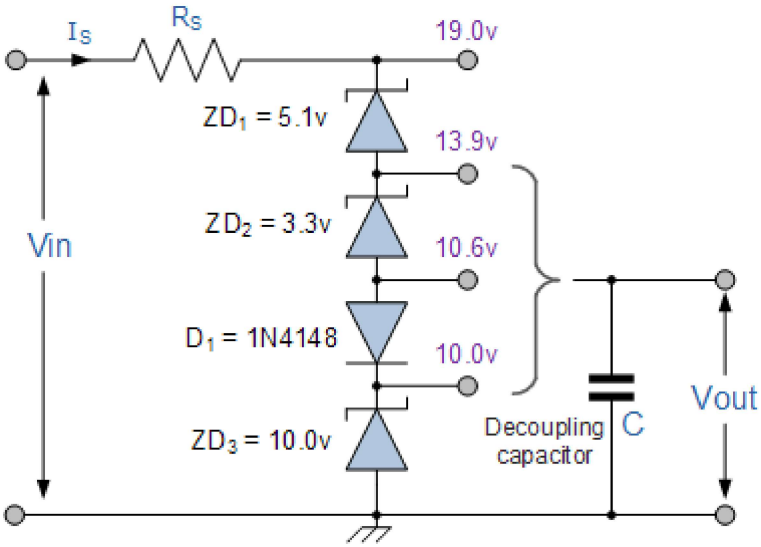

The values of the individual Zener diodes can be chosen to suit the application while the silicon diode will always drop

We use cookies on our website to give you the most relevant experience by remembering your preferences and repeat visits. By clicking “Accept All”, you consent to the use of ALL the cookies. However, you may visit "Cookie Settings" to provide a controlled consent.

Cookie Settings Accept All

are given in the table below.

Zener Diode Standard Zener Voltages

BZX55 Zener Diode Power Rating 500mW							
2.4V	2.7V	3.0V	3.3V	3.6V	3.9V	4.3V	4.7V
5.1V	5.6V	6.2V	6.8V	7.5V	8.2V	9.1V	10V
11V	12V	13V	15V	16V	18V	20V	22V
24V	27V	30V	33V	36V	39V	43V	47V
BZX85 Zener Diode Power Rating 1.3W							
3.3V	3.6V	3.9V	4.3V	4.7V	5.1V	5.6	6.2V
6.8V	7.5V	8.2V	9.1V	10V	11V	12V	13V
15V	16V	18V	20V	22V	24V	27V	30V
33V	36V	39V	43V	47V	51V	56V	62V

Zener Diode Clipping Circuits

Thus far we have looked at how a zener diode can be used to regulate a constant DC source but what if the input signal was not steady state DC but an alternating AC waveform how would the zener diode react to a constantly changing signal.

Diode clipping and clamping circuits are circuits that are used to shape or modify an input AC waveform (or any sinusoid) producing a differently shape output waveform depending on the circuit arrangement. Diode clipper circuits are also called limiters because they limit or clip-off the positive (or negative) part of an input AC signal. As zener clipper circuits limit or cut-off part of the waveform across them, they are mainly used for circuit protection or in waveform shaping circuits.

For example, if we wanted to clip an output waveform at +7.5V, we would use a 7.5V zener diode. If the output waveform tries to exceed the 7.5V limit, the zener diode will “clip-off” the excess voltage from the input producing a waveform with a flat top still keeping the output constant at +7.5V.

Note that in the forward bias condition a zener diode is still a diode and when the AC waveform output goes negative below -0.7V, the zener diode turns “ON” like any normal silicon diode would and clips the output at -0.7V as shown below.

Square Wave Signal

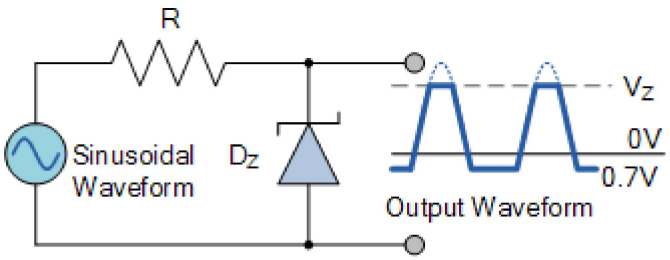

Single Zener
Diode Clipping

Double Zener

We use cookies on our website to give you the most relevant experience by remembering your preferences and repeat visits. By clicking “Accept All”, you consent to the use of ALL the cookies. However, you may visit "Cookie Settings" to provide a controlled consent.

Cookie Settings Accept All

The back to back connected zener diodes can be used as an AC regulator producing what is jokingly called a “poor man’s square wave generator”. Using this arrangement we can clip the waveform between a positive value of +8.2V and a negative value of -8.2V for a 7.5V zener diode.

So for example, if we wanted to clip an output waveform between two different minimum and maximum values of say, +8V and -6V, we would simply use two differently rated zener diodes. Note that the output will actually clip the AC waveform between +8.7V and -6.7V due to the addition of the forward biasing diode voltage.

In other words a peak-to-peak voltage of 15.4 volts instead of expected 14 volts, as the forward bias volt drop across the diode adds another 0.7 volts in each direction.

This type of clipper configuration is fairly common for protecting an electronic circuit from over voltage. The two zener’s are generally placed across the power supply input terminals and during normal operation, one of the zener diodes is “OFF” and the diodes have little or no affect. However, if the input voltage waveform exceeds its limit, then the zener’s turn “ON” and clip the input to protect the circuit.

In the next tutorial about diodes, we will look at using the forward biased PN junction of a diode to produce light. We know from the previous tutorials that when charge carriers move across the junction, electrons combine with holes and energy is lost in the form of heat, but also some of this energy is dissipated as photons but we can not see them.

If we place a translucent lens around the junction, visible light will be produced and the diode becomes a light source. This effect produces another type of diode known commonly as the Light Emitting Diode which takes advantage of this light producing characteristic to emit light (photons) in a variety of colours and wavelengths.

Read more Tutorials inDiodes

- 1. Semiconductor Basics
- 2. PN Junction Theory
- 3. PN Junction Diode
- 4. The Signal Diode
- 5. Power Diodes and Rectifiers
- 6. Full Wave Rectifier
- 7. The Zener Diode
- 8. The Light Emitting Diode
- 9. Bypass Diodes in Solar Panels
- 10. Diode Clipping Circuits
- 11. The Schottky Diode

334 Comments

Join the conversation

Error! Please fill all fields.

Your Name

Email Address

We use cookies on our website to give you the most relevant experience by remembering your preferences and repeat visits. By clicking “Accept All”, you consent to the use of ALL the cookies. However, you may visit "Cookie Settings" to provide a controlled consent.

Cookie Settings Accept All

☐ Notify me of follow-up comments by email.

Submit

- *gvg*

  Is it ok to use this technique to ensure that the voltage coming from a battery never exceeds 12V (for example)?

  Posted on January 20th 2022 | 11:27 am
  Reply
  - *Wayne Storr*

    Parallel connected Zener diode stabilisation is commonly used to limit any overvoltage to the zener's voltage rating. However, a series resistor should be used to limit the zener current to a safe value.

    Posted on January 20th 2022 | 11:58 am
    Reply
- *Robert*

  You mentioned that zeners can be noisy and offered a way to mitigate that, but what if generating noise is the objective? Say, as a white noise source for testing the frequency response of filters, etc? How would you bias the zener to maximize the noise? Small current? Large current? Somewhere in-between?

  Posted on January 17th 2022 | 10:04 pm
  Reply
  - *Wayne Storr*

    When the voltage across a zener diode increases slightly above its breakdown value, leakage current increases through its depletion region triggering avalanche breakdown of the junction. This causes the voltage dropped across the junction to fall down below the zener's breakdown voltage so the avalanche of electrons suddenly stops. The voltage rises across the junction causing the same ON-OFF effect when the voltage is equal to the zener breackdown value. Thus a suitable value zener diode operating in its junction-breakdown mode can be used to produce white noise almost independent of the zener current

    Posted on January 18th 2022 | 8:32 am
    Reply
- *Vlad Tepes*

  Learned about using zener diodes with rectifiers a couple semesters ago, now working on a hobby project and need to regulate some dc voltage. This was an awesome refresher, thanks!

  Posted on December 19th 2021 | 8:09 pm
  Reply
- *iftik arman emon*

  very nice

  Posted on December 12th 2021 | 12:13 pm
  Reply
- *Vasudeva Bhat*

We use cookies on our website to give you the most relevant experience by remembering your preferences and repeat visits. By clicking "Accept All", you consent to the use of ALL the cookies. However, you may visit "Cookie Settings" to provide a controlled consent.

Cookie Settings Accept All

Posted on August 19th 2021 | 1:04 pm
Reply

- *John*

  Thanks for simple and beautiful explanation

  Posted on June 09th 2021 | 4:06 am
  Reply
- *Prekshitha kM*

  good

  Posted on May 02nd 2021 | 7:20 am
  Reply
- *Dharajiya Dharmesh*

  Very nice

  Posted on April 23rd 2021 | 5:57 am
  Reply
- *Mark*

  Answer the question above

  Posted on April 22nd 2021 | 12:46 pm
  Reply
- *faiza ali*

  Draw Zener regulator circuit to obtain regulated DC voltage 6.8 V. Considering input DC voltage in the range from 10V to 30V. Consider load resistance of 10K

  Posted on April 16th 2021 | 5:19 am
  Reply
- *Zahid mushtaq*

  How to make wave forms

  Posted on March 29th 2021 | 9:34 am
  Reply
- *Caio*

  Thank you.

  Posted on March 25th 2021 | 1:39 am
  Reply
- *Godstime*

  I love this site

  Posted on March 21st 2021 | 2:03 am
  Reply

We use cookies on our website to give you the most relevant experience by remembering your preferences and repeat visits. By clicking “Accept All”, you consent to the use of ALL the cookies. However, you may visit "Cookie Settings" to provide a controlled consent.

Cookie Settings Accept All

- *Orestes*

  Los diodos zener conducen después de su valor, ej, un zener de 6V conduce voltaje después de 6V, si, la entrada de voltaje es superior a 6.7V. Saludos.

  Posted on March 07th 2021 | 10:07 pm
  Reply
- *moeen*

  hi
  i have 1.8V 0.5W zener diode i want to regulate 1.8 V.
  Vs = 4.2V, Rs= 300 Ohm, RL =2Kohm, but zener does not regulate.What is wrong?

  Posted on December 31st 2020 | 12:29 pm
  Reply
- *basit*

  You are measuring the current “IS” in a circuit given below that is operated on a 15 V battery. The ammeter reads 6 mA. Later, you notice that the current has increased to 12 mA. Eliminating the possibility of a resistance change how much has the voltage of the battery has changed. What is its new value and calculate zener current “IZ” when RL is 1KΩ?
  please help me to solve as soon as posible

  Posted on December 08th 2020 | 6:51 pm
  Reply
  - More
- *Vishnu.s*

  Connecting wires is equal to 5 A =10.then 50A=?

  Posted on December 01st 2020 | 6:00 am
  Reply
- *JohnA*

  Trying to repair and upgrade my recording studio equipment

  Posted on November 22nd 2020 | 3:21 pm
  Reply

We use cookies on our website to give you the most relevant experience by remembering your preferences and repeat visits. By clicking “Accept All”, you consent to the use of ALL the cookies. However, you may visit "Cookie Settings" to provide a controlled consent.

Cookie Settings Accept All