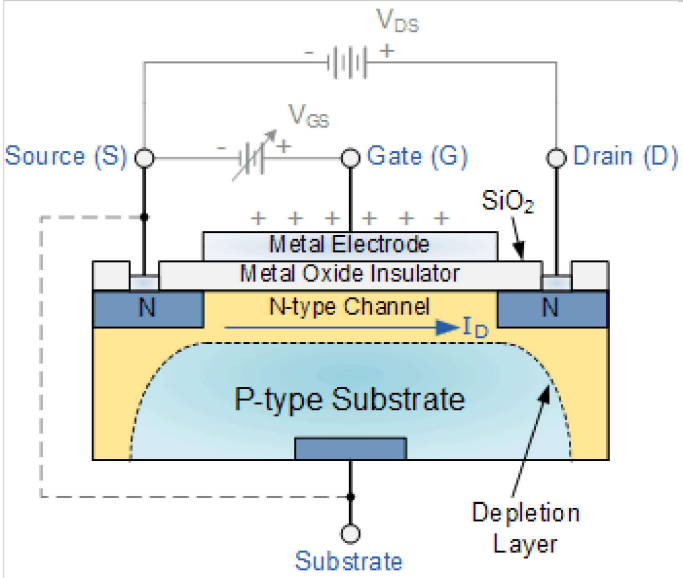

The MOSFET

MOSFET's operate the same as JFET's but have a gate terminal that is electrically isolated from the conductive channel.

As well as the Junction Field Effect Transistor (JFET), there is another type of Field Effect Transistor available whose Gate input is electrically insulated from the main current carrying channel. The MOSFET is a type of semiconductor device called an **Insulated Gate Field Effect Transistor**.

The most common type of insulated gate FET which is used in many different types of electronic circuits is called the **Metal Oxide Semiconductor Field Effect Transistor** or **MOSFET** for short.

The **IGFET** or **MOSFET** is a voltage controlled field effect transistor that differs from a JFET in that it has a "Metal Oxide" Gate electrode which is electrically insulated from the main semiconductor n-channel or p-channel by a very thin layer of insulating material usually silicon dioxide, commonly known as glass.

This ultra thin insulated metal gate electrode can be thought of as one plate of a capacitor. The isolation of the controlling Gate makes the input resistance of the **MOSFET** extremely high way up in the Mega-ohms ($M\Omega$) region thereby making it almost infinite.

As the Gate terminal is electrically isolated from the main current carrying channel between the drain and source, "NO current flows into the gate" and just like the JFET, the MOSFET also acts like a voltage controlled resistor where the current flowing through the main channel between the Drain and Source is proportional to the input voltage. Also like the JFET, the MOSFETs very high input resistance can easily accumulate large amounts of static charge resulting in the **MOSFET** becoming easily damaged unless carefully handled or protected.

Like the previous JFET tutorial, MOSFETs are three terminal devices with a Gate, Drain and Source and both P-channel (PMOS) and N-channel (NMOS) MOSFETs are available. The main difference this time is that MOSFETs are available in two basic forms:

- Depletion Type – the transistor requires the Gate-Source voltage, (V_{GS}) to switch the device "OFF". The depletion mode MOSFET is equivalent to a "Normally Closed" switch.
- Enhancement Type – the transistor requires a Gate-Source voltage, (V_{GS}) to switch the device "ON". The enhancement mode MOSFET is equivalent to a "Normally Open" switch.

The symbols and basic construction for both configurations of MOSFETs are shown below.

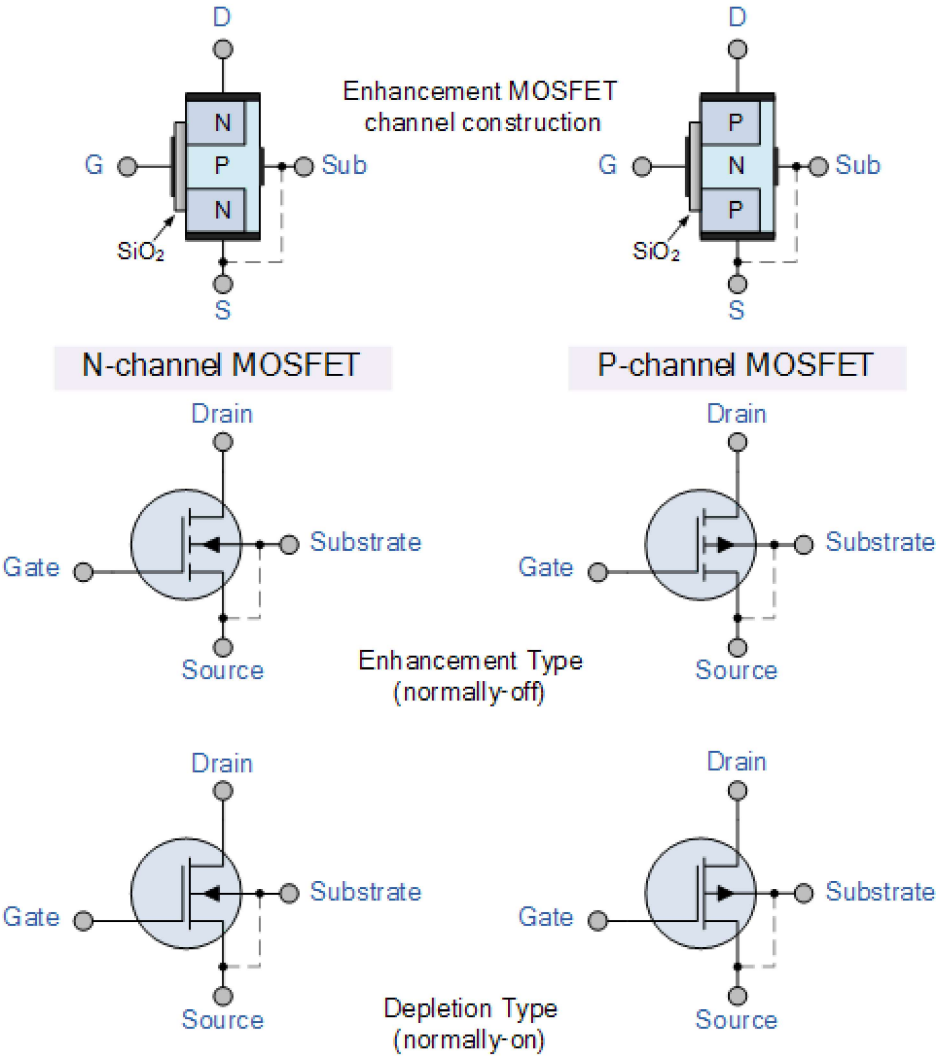

The four MOSFET symbols above show an additional terminal called the Substrate and is not normally used as either an input or an output connection but instead it is used for grounding the substrate. It connects to the main semiconductive channel through a diode junction to the body or metal tab of the MOSFET.

Usually in discrete type MOSFETs, this substrate lead is connected internally to the source terminal. When this is the case, as in enhancement types it is omitted from the symbol for clarification.

The line in the MOSFET symbol between the drain (D) and source (S) connections represents the transistors semiconductive channel. If this channel line is a solid unbroken line then it represents a “Depletion” (normally-ON) type MOSFET as drain current can flow with zero gate biasing potential.

If the channel line is shown as a dotted or broken line, then it represents an “Enhancement” (normally-OFF) type MOSFET as zero drain current flows with zero gate potential. The direction of the arrow pointing to this channel line indicates whether the conductive channel is a P-type or an N-type semiconductor device.

Basic MOSFET Structure and Symbol

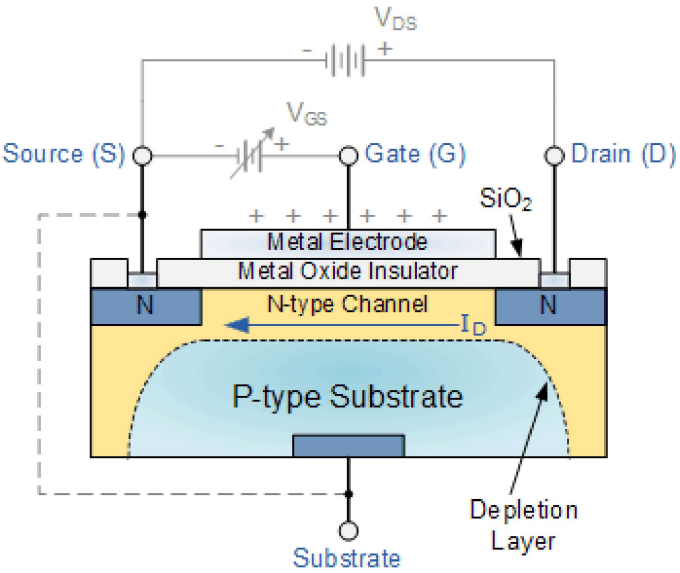

The construction of the Metal Oxide Semiconductor FET is very different to that of the Junction FET. Both the Depletion and Enhancement type MOSFETs use an electrical field produced by a gate voltage to alter the flow of charge carriers, electrons for n-channel or holes for P-channel, through the semiconductive drain-source channel. The gate electrode is placed on top of a very thin insulating layer and there are a pair of small n-type regions just under the drain and source electrodes.

We saw in the previous tutorial, that the gate of a junction field effect transistor, JFET must be biased in such a way as to reverse-bias the pn-junction. With a insulated gate MOSFET device no such limitations apply so it is possible to bias the gate of a MOSFET in either polarity, positive (+ve) or negative (-ve).

This makes the MOSFET device especially valuable as electronic switches or to make logic gates because with no bias they are normally non-conducting and this high gate input resistance means that very little or no control current is needed as MOSFETs are voltage controlled devices. Both the p-channel and the n-channel MOSFETs are available in two basic forms, the **Enhancement** type and the **Depletion** type.

Depletion-mode MOSFET

The **Depletion-mode MOSFET**, which is less common than the enhancement mode types is normally switched "ON" (conducting) without the application of a gate bias voltage. That is the channel conducts when $V_{GS} = 0$ making it a "normally-closed" device. The circuit symbol shown above for a depletion MOS transistor uses a solid channel line to signify a normally closed conductive channel.

For the n-channel depletion MOS transistor, a negative gate-source voltage, $-V_{GS}$ will deplete (hence its name) the conductive channel of its free electrons switching the transistor "OFF". Likewise for a p-channel depletion MOS transistor a positive gate-source voltage, $+V_{GS}$ will deplete the channel of its free holes turning it "OFF".

In other words, for an n-channel depletion mode MOSFET: $+V_{GS}$ means more electrons and more current. While a $-V_{GS}$ means less electrons and less current. The opposite is also true for the p-channel types. Then the depletion mode MOSFET is equivalent to a "normally-closed" switch.

Depletion-mode N-Channel Circuit Symbols

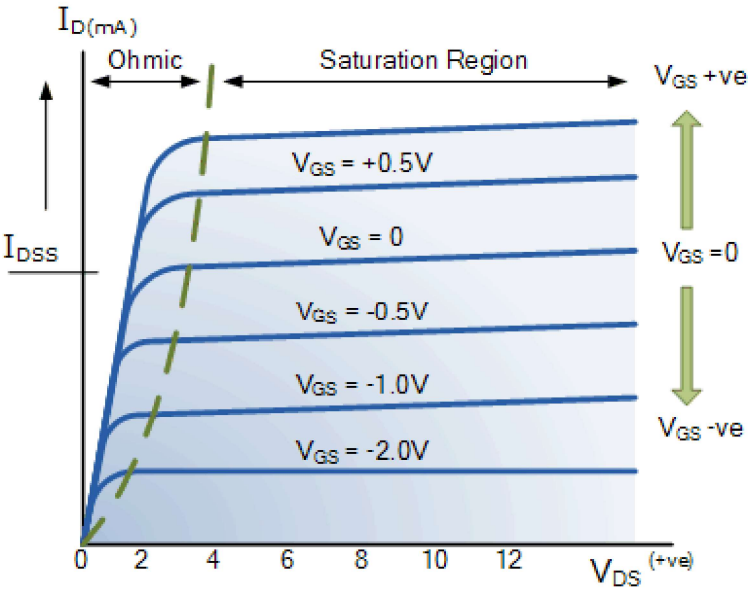

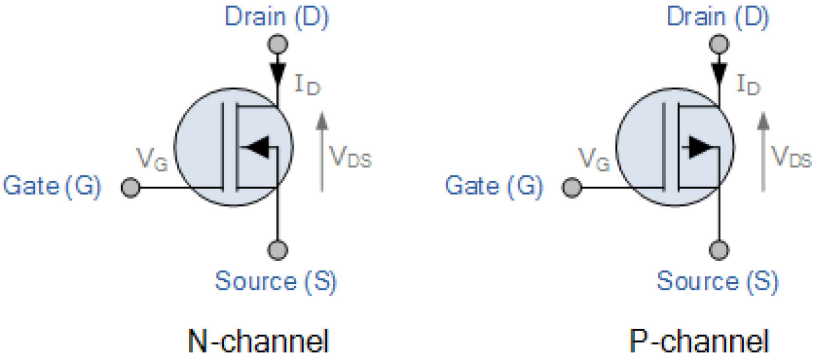

The depletion-mode MOSFET is constructed in a similar way to their JFET transistor counterparts were the drain-source channel is inherently conductive with the electrons and holes already present within the n-type or p-type channel. This doping of the channel produces a conducting path of low resistance between the Drain and Source with zero Gate bias.

Enhancement-mode MOSFET

The more common **Enhancement-mode MOSFET** or eMOSFET, is the reverse of the depletion-mode type. Here the conducting channel is lightly doped or even undoped making it non-conductive. This results in the device being normally "OFF" (non-conducting) when the gate bias voltage, V_{GS} is equal to zero. The circuit symbol shown above for an enhancement MOS transistor uses a broken channel line to signify a normally open non-conducting channel.

For the n-channel enhancement MOS transistor a drain current will only flow when a gate voltage (V_{GS}) is applied to the gate terminal greater than the threshold voltage (V_{TH}) level in which conductance takes place making it a transconductance device.

The application of a positive (+ve) gate voltage to a n-type eMOSFET attracts more electrons towards the oxide layer around the gate thereby increasing or enhancing (hence its name) the thickness of the channel allowing more current to flow. This is why this kind of transistor is called an enhancement mode device as the application of a gate voltage enhances the channel.

Increasing this positive gate voltage will cause the channel resistance to decrease further causing an increase in the drain current, I_D through the channel. In other words, for an n-channel enhancement mode MOSFET: $+V_{GS}$ turns the transistor "ON", while a zero or $-V_{GS}$ turns the transistor "OFF". Thus the enhancement-mode MOSFET is equivalent to a "normally-open" switch.

The reverse is true for the p-channel enhancement MOS transistor. When $V_{GS} = 0$ the device is "OFF" and the channel is open. The application of a negative (-ve) gate voltage to the p-type eMOSFET enhances the channels conductivity turning it "ON". Then for an p-channel enhancement mode MOSFET: $+V_{GS}$ turns the transistor "OFF", while $-V_{GS}$ turns the transistor "ON".

Enhancement-mode N-Channel Circuit Symbols

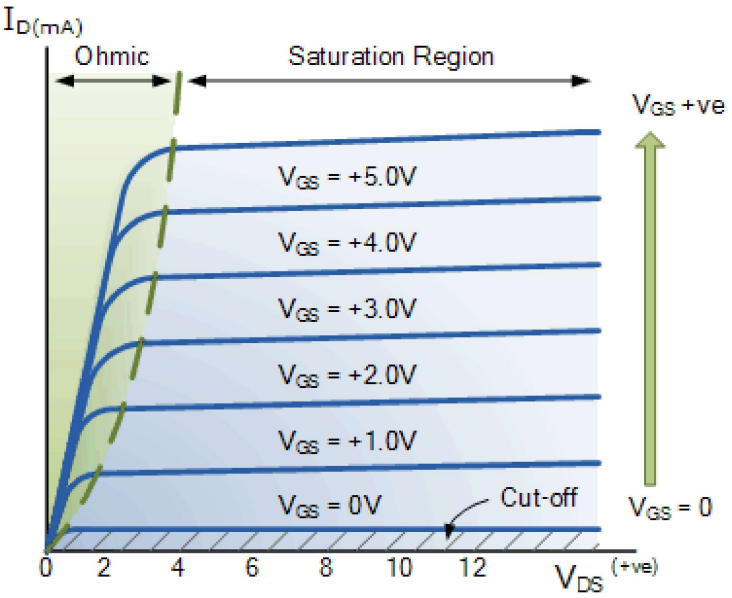

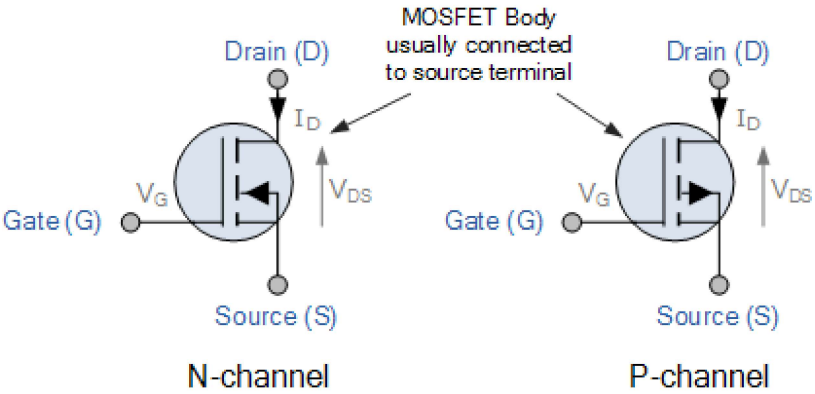

Enhancement-mode MOSFETs make excellent electronics switches due to their low "ON" resistance and extremely high "OFF" resistance as well as their infinitely high input resistance due to their isolated gate. Enhancement-mode MOSFETs are used in integrated circuits to produce CMOS type *Logic Gates* and power switching circuits in the form of as PMOS (P-channel) and NMOS (N-channel) gates. CMOS actually stands for *Complementary MOS* meaning that the logic device has both PMOS and NMOS within its design.

The MOSFET Amplifier

Just like the previous Junction Field Effect transistor, MOSFETs can be used to make single stage class "A" amplifier circuits with the enhancement mode n-channel MOSFET common source amplifier being the most popular circuit. Depletion mode MOSFET amplifiers are very similar to the JFET amplifiers, except that the MOSFET has a much higher input impedance.

This high input impedance is controlled by the gate biasing resistive network formed by R1 and R2. Also, the output signal for the enhancement mode common source MOSFET amplifier is inverted because when V_G is low the transistor is switched "OFF" and V_D (Vout) is high. When V_G is high the transistor is switched "ON" and V_D (Vout) is low as shown.

Enhancement-mode N-Channel Amplifier

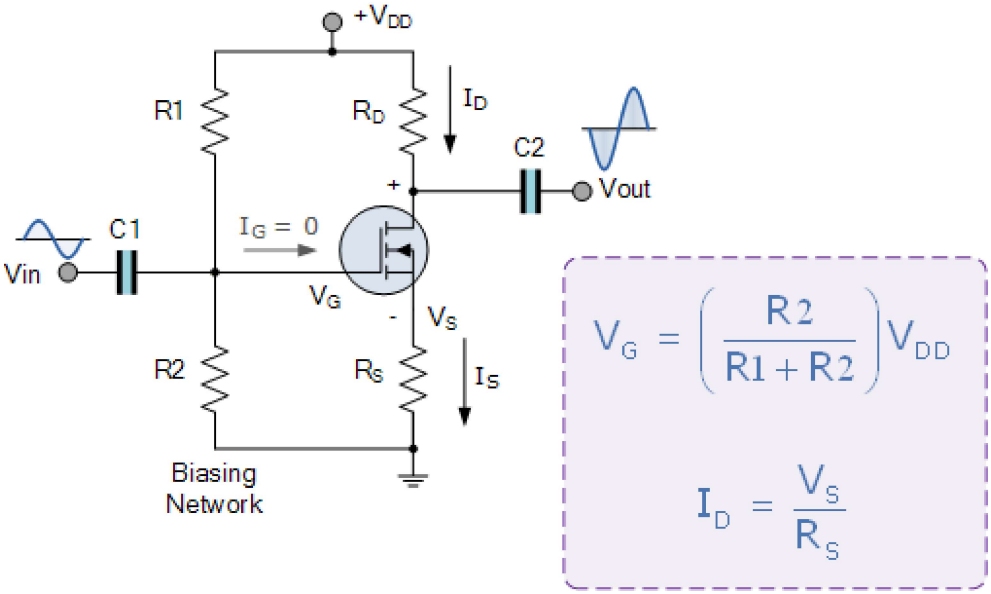

The DC biasing of this common source (CS) MOSFET amplifier circuit is virtually identical to the JFET amplifier. The MOSFET circuit is biased in class A mode by the voltage divider network formed by resistors R1 and R2. The AC input resistance is given as $R_{IN} = R_G = 1M\Omega$.

Metal Oxide Semiconductor Field Effect Transistors are three terminal active devices made from different semiconductor materials that can act as either an insulator or a conductor by the application of a small signal voltage.

The MOSFETs ability to change between these two states enables it to have two basic functions: "switching" (digital electronics) or "amplification" (analogue electronics). Then MOSFETs have the ability to operate within three different regions:

1. Cut-off Region – with $V_{GS} < V_{threshold}$ the gate-source voltage is much lower than the transistors threshold voltage so the MOSFET transistor is switched "fully-OFF" thus, $I_D = 0$, with the transistor acting like an open switch regardless of the value of V_{DS}.
2. Linear (Ohmic) Region – with $V_{GS} > V_{threshold}$ and $V_{DS} < V_{GS}$ the transistor is in its constant resistance region behaving as a voltage-controlled resistance whose resistive value is determined by the gate voltage, V_{GS} level.
3. Saturation Region – with $V_{GS} > V_{threshold}$ and $V_{DS} > V_{GS}$ the transistor is in its constant current region and is therefore "fully-ON". The Drain current I_D = Maximum with the transistor acting as a closed switch.

MOSFET Tutorial Summary

The Metal Oxide Semiconductor Field Effect Transistor, or **MOSFET** for short, has an extremely high input gate resistance with the current flowing through the channel between the source and drain being controlled by the gate voltage. Because of this high input impedance and gain, MOSFETs can be easily damaged by static electricity if not carefully protected or handled.

MOSFET's are ideal for use as electronic switches or as common-source amplifiers as their power consumption is very small. Typical applications for metal oxide semiconductor field effect transistors are in Microprocessors, Memories, Calculators and Logic CMOS Gates etc.

Also, notice that a dotted or broken line within the symbol indicates a normally "OFF" enhancement type showing that "NO" current can flow through the channel when zero gate-source voltage V_{GS} is applied.

A continuous unbroken line within the symbol indicates a normally "ON" Depletion type showing that current "CAN" flow through the channel with zero gate voltage. For p-channel types the symbols are exactly the same for both types except that the arrow points outwards. This can be summarised in the following switching table.

MOSFET type	V_{GS} = +ve	V_{GS} = 0	V_{GS} = -ve
N-Channel Depletion	ON	ON	OFF

N-Channel Enhancement	ON	OFF	OFF
P-Channel Depletion	OFF	ON	ON
P-Channel Enhancement	OFF	OFF	ON

So for n-type enhancement type MOSFETs, a positive gate voltage turns “ON” the transistor and with zero gate voltage, the transistor will be “OFF”. For a p-channel enhancement type MOSFET, a negative gate voltage will turn “ON” the transistor and with zero gate voltage, the transistor will be “OFF”. The voltage point at which the MOSFET starts to pass current through the channel is determined by the threshold voltage V_{TH} of the device.

In the next tutorial about **Field Effect Transistors** instead of using the transistor as an amplifying device, we will look at the operation of the transistor in its saturation and cut-off regions when used as a solid-state switch. Field effect transistor switches are used in many applications to switch a DC current “ON” or “OFF” such as LED’s which require only a few milliamps at low DC voltages, or motors which require higher currents at higher voltages.

Read more Tutorials inTransistors

- 1. Bipolar Transistor
- 2. NPN Transistor
- 3. PNP Transistor
- 4. Transistor as a Switch
- 5. Junction Field Effect Transistor
- 6. The MOSFET
- 7. MOSFET as a Switch
- 8. Transistor Tutorial Summary
- 9. Darlington Transistors
- 10. FET Current Source
- 11. Open Collector Outputs

158 Comments

Join the conversation

Error! Please fill all fields.

Your Name

Email Address

Write your comment here

Notify me of follow-up comments by email.

Submit

- *Tahir Khan*

  A good article with limited and usefull unformation about MOSFETs specially that table

  Posted on September 11th 2022 | 2:48 am
  Reply
- *Simon*

  How about transistors as an amplifier

  Posted on June 17th 2022 | 9:14 am

Reply

- *Wayne Storr*

  Then read the Amplifiers section

  Posted on June 17th 2022 | 9:41 am
  Reply

- *Annu Sharma*

  Good 👍

  Posted on May 25th 2022 | 10:36 am
  Reply

- *ibrahim*

  good i liked it

  Posted on March 21st 2022 | 11:55 am
  Reply

- *Steven Tseng*

  Could you tell the specification of low side mosfet and high side mosfet, what is the difference of expectation , when you choose them?

  The Rds_on, the Qg, the capacitance,
  How to pick the best desired mosfet from their datasheet?

  Thank you

  Steven

  Posted on December 08th 2021 | 7:40 pm
  Reply

- *Wayne Storr*

  Low side switching indicates the MOSFET is connected between load and ground (0V). Thus the Source of the MOSFET is at ground potential and the Gate of the MOSFET is pulled HIGH to turn it ON. High side switching indicates the MOSFET is connected between load and power supply. Thus the Drain of the MOSFET is at VDD potential and the Gate is pulled to a HIGHER voltage than the Drain voltage to turn it ON. Rds(on) is affected by temperature, load current and inrush current. The choice of MOSFET will depend on voltage and current ratings of the application.

  Posted on December 09th 2021 | 8:08 am
  Reply

- *johnny*

  you have the wrong person, my question that I asked, what is your opinion of spice simulators in particular multisim thank you

  Posted on November 03rd 2021 | 12:15 am
  Reply

- *Sardar Muhammad khalid khan*

  Most Respactable Sir very nice and full information Thanks a Lot,s Respectable Sir.

  Posted on November 02nd 2021 | 8:42 am
  Reply

- *Johnny*

  Outstanding you are with out a doubt the best teacher on the internet. Just one question is the threshold value in a mosfet preset in other words it is a constant for particular mosfet thank you wish you the best

  Posted on September 05th 2021 | 6:26 pm
  Reply

- *Ricky*

Is depletion-mode are the same as depletion type? I mean, they're just differences in pronunciation?

Posted on July 15th 2021 | 10:38 am
Reply

- *alex lim*

Hello,i'm just want to know what look like region operation of:-
1.An n-channel enhancement-mode MOSFET has an a threshhold voltage of VTN = 1.2 V and an applied gate-to-source of vgs = 2 V. Determine the region of operation when:
(i)Vds = 0.4 V
(ii)Vds = 1 V

2.For a PMOS device, the threshhold voltage of VTP = -2 V and the applied source-to- gate vsg = 3 V. Determine the region of operation when:
(i)Vsd = 0.5 V
(ii)Vsd = 2 V

thanks for further information

Posted on June 06th 2021 | 9:26 am
Reply

- *Mohammed S Abuswillim*

Thanks vlfor the knowledge

Posted on April 18th 2021 | 1:09 am
Reply

- *Rutika*

Hii my maths problems

Posted on April 02nd 2021 | 4:49 am
Reply

- *Sidra bibi*

I want all information about JFET in detail include lecture JFET biasing circuit

Posted on January 20th 2021 | 6:46 am
Reply

- *Prasanna*

But you don't explain about p channel enhancement mode it's a drawback of your topic that's it all is good

Posted on December 27th 2020 | 9:53 am
Reply

- *Dung*

What is the secondary effect of mosfet? who know. please answer me.. thank you

Posted on December 02nd 2020 | 8:31 am
Reply

- *Manish Singh*

understand ok

Posted on November 18th 2020 | 3:31 am
Reply

- *ayasto*

thank you very much the article was very helpful

Posted on November 11th 2020 | 11:20 am
Reply

- *Rony*

Basic explanation was really helpful. Request to plot some graphical explanation for better understanding.

Posted on October 23rd 2020 | 2:39 pm
Reply

- *half ased*

  Don’t use consistent terms. eg. alternates between normally-on, normally-switched off & normally open it’s a sh*t show. also, the tables don’t have correct values.

  Posted on October 15th 2020 | 3:49 pm
  Reply
  - More
- *Irene*

  Very good article.

  Posted on October 11th 2020 | 10:21 pm
  Reply