Guard Ring In Pcb Layout

Written By voice Wednesday, December 31, 1969 Add Comment

You can find applications of guard ring in pcb design that involves op amp. Tips about pcb design.

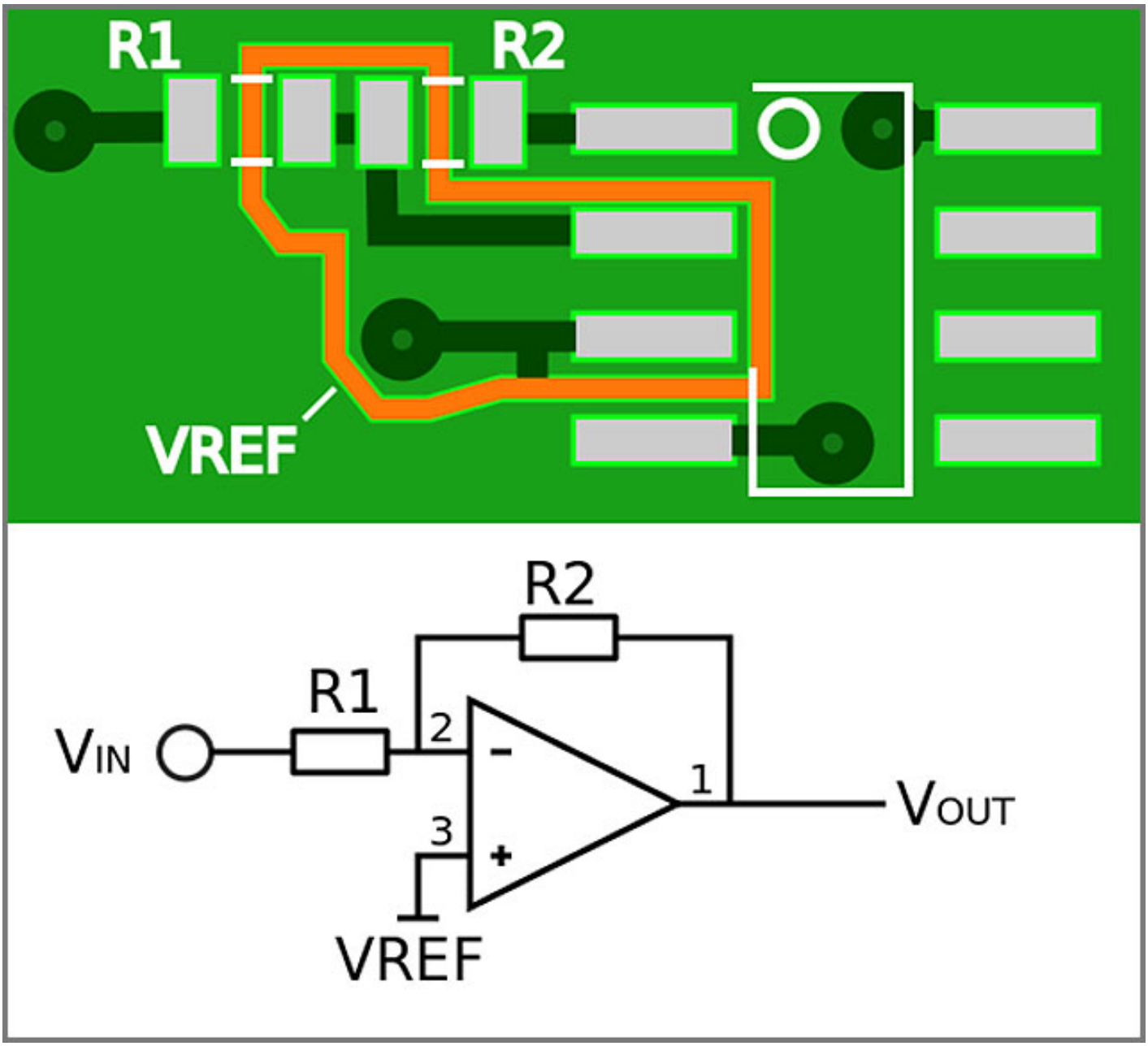

Pcb Guard Ring And The Significance In A Circuit

It should also be connected along its length by several vias.

Guard ring in pcb layout. A pcb guard ring can be a critical element depending upon your board design. Creating guard rings beques over 6 years ago i am working an example learning how to do pcb design using allegro pcb editor from the orcad 166 suite and im having a problem where when i try to put a guard ring around a through hole pin it erases the trace when i place the last point of the arc. As implied by its name a guard ring protects the node that it is surrounding from external disturbance.

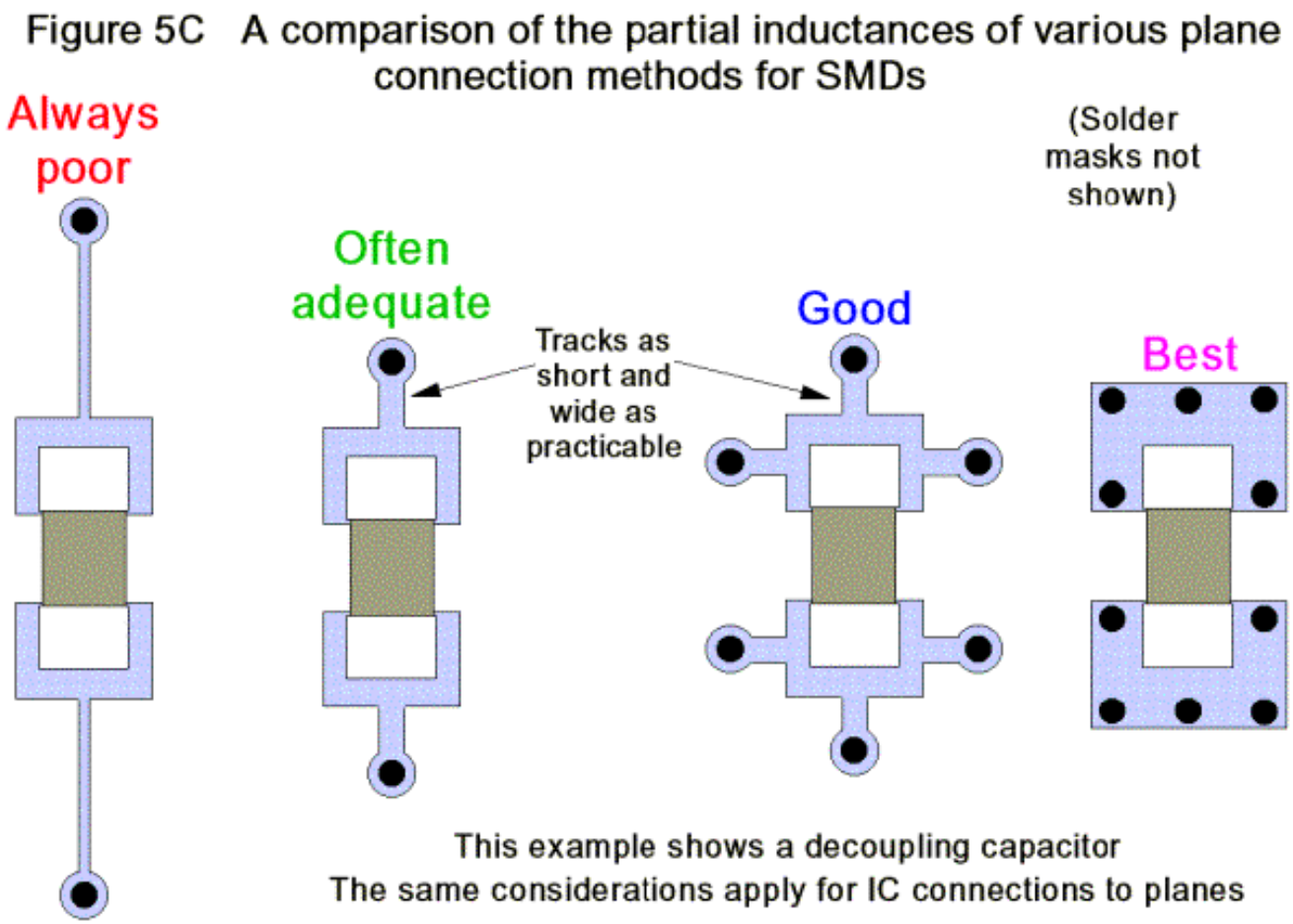

4pcb guard ring emi. Emi is one of the hardest disturbances to measure. If needed these protection traces can be a simple addition to your layout.

Now that you have you a circuit ready with a guard ring in pace. What is a guard ring. The layout for a guard ring differs depending on its purpose and.

Pcb guard ring and the significance in a circuit 2guard ring layout. Part 3 static and dynamic pcb effects embedded. You may want to expose the guard ring on both sides of the pcb.

For traditional through hole pcb connections to be most effective the guard pattern should appear on both sides of the circuit board. In case there is only one pcb layer it is recommended to place a guard ring around the oscillator components and to connect it to the oscillator ground pin atmel avr186. The guard ring guards the high impedance input of the op amp which is prone to current leakage.

Best practices for the pcb layout of oscillators application note. A guard ring is often copper trace that is drawn across a node in a circuit. However you should follow good guidelines and enlist your contract manufacturer cm for assistance to ensure dfm rules such as appropriate clearances are incorporated.

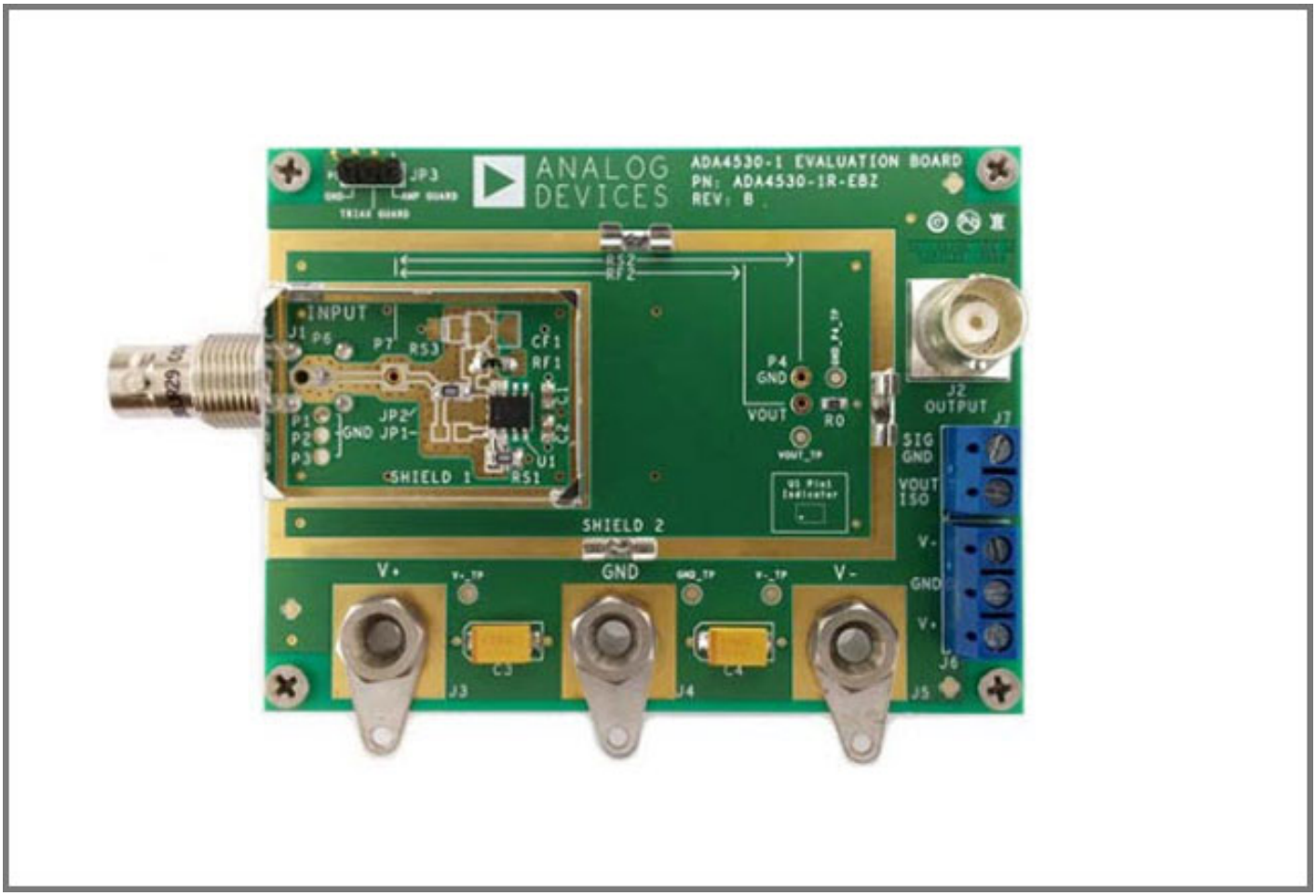

Pcb Guard Ring And The Significance In A Circuit

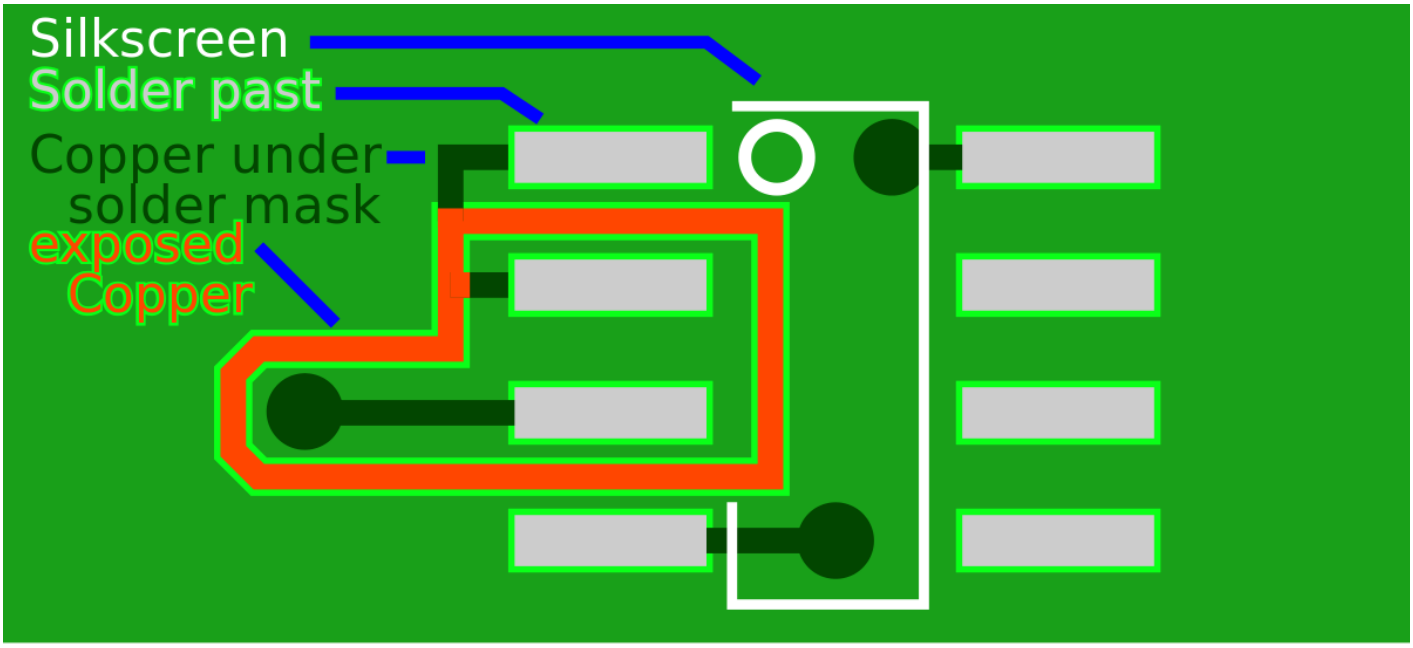

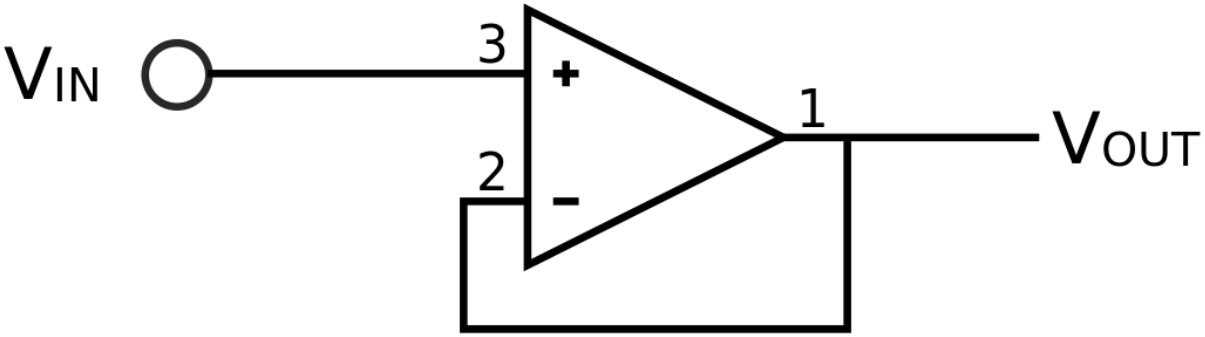

Driven Guard Wikipedia

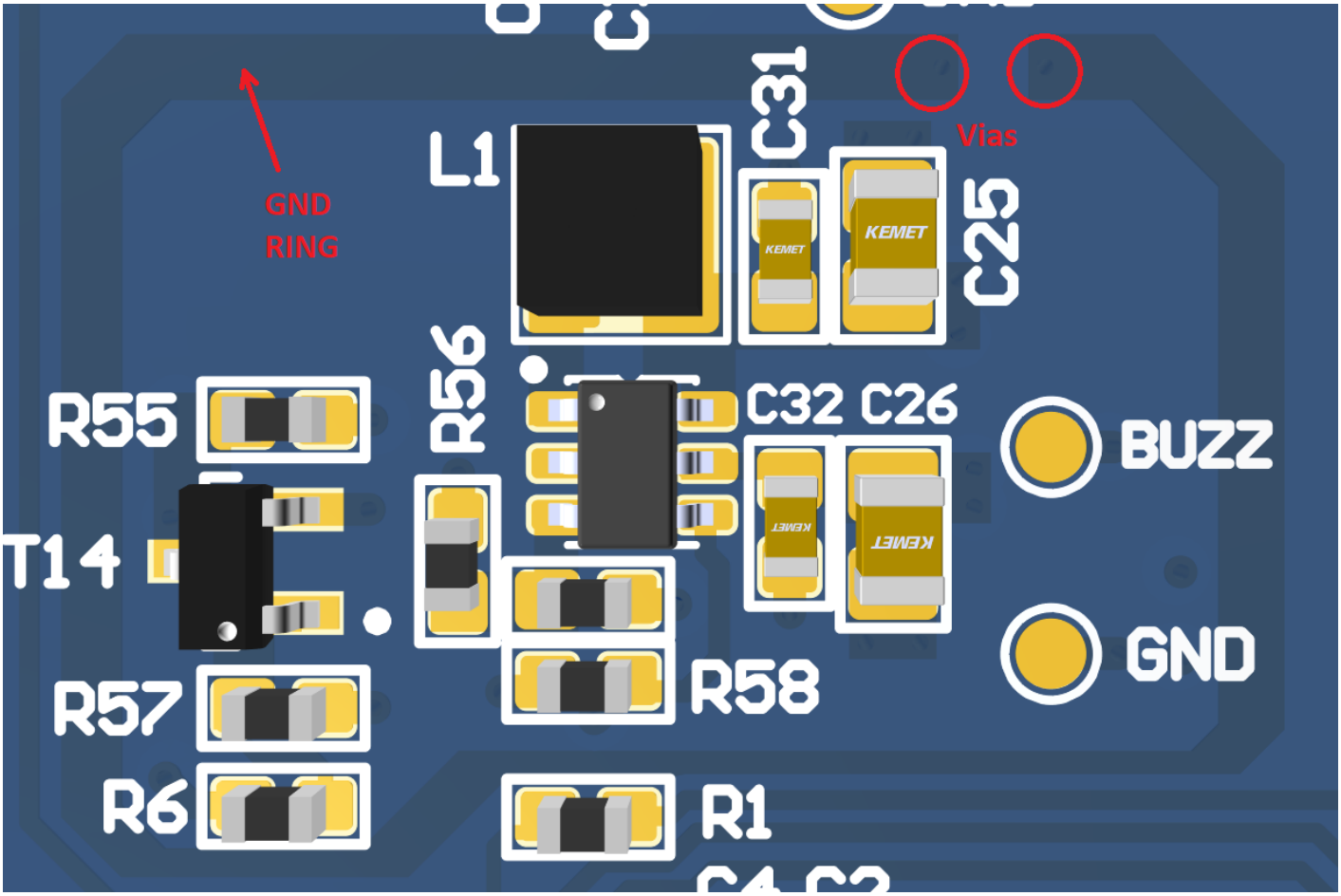

Pcb Gnd Guard Ring Electrical Engineering Stack Exchange

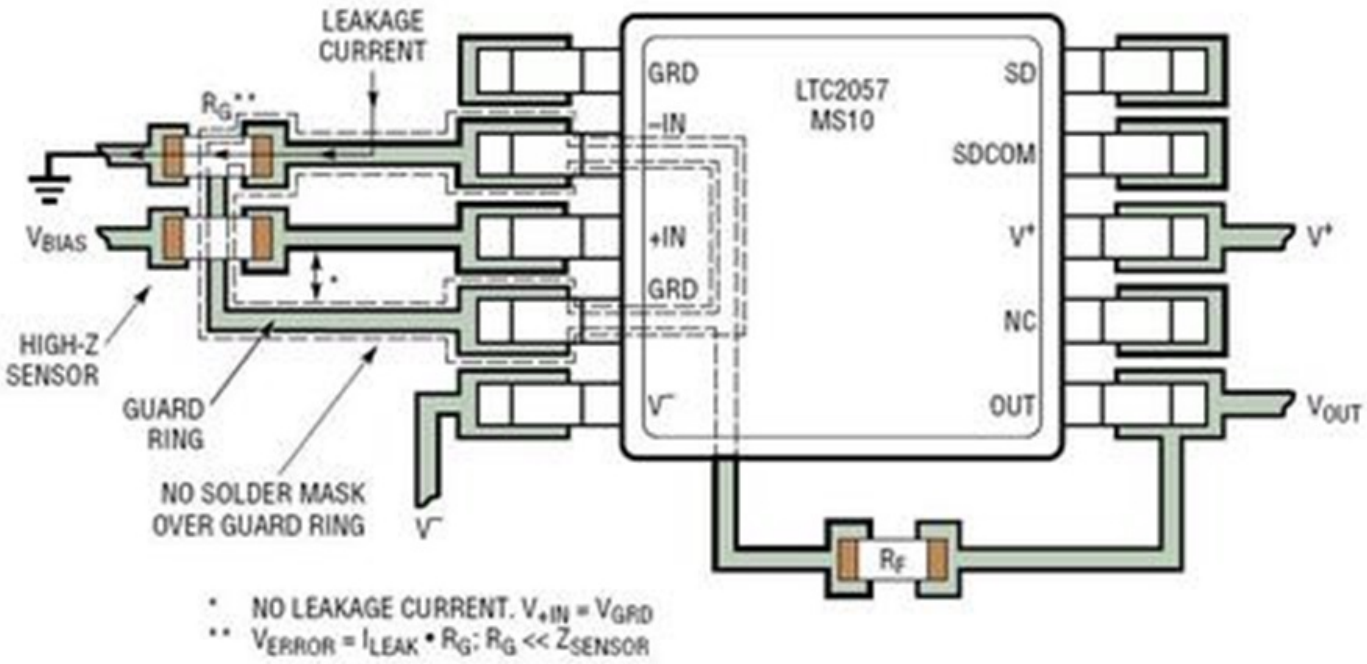

Layout For Precision Op Amps Analog Devices

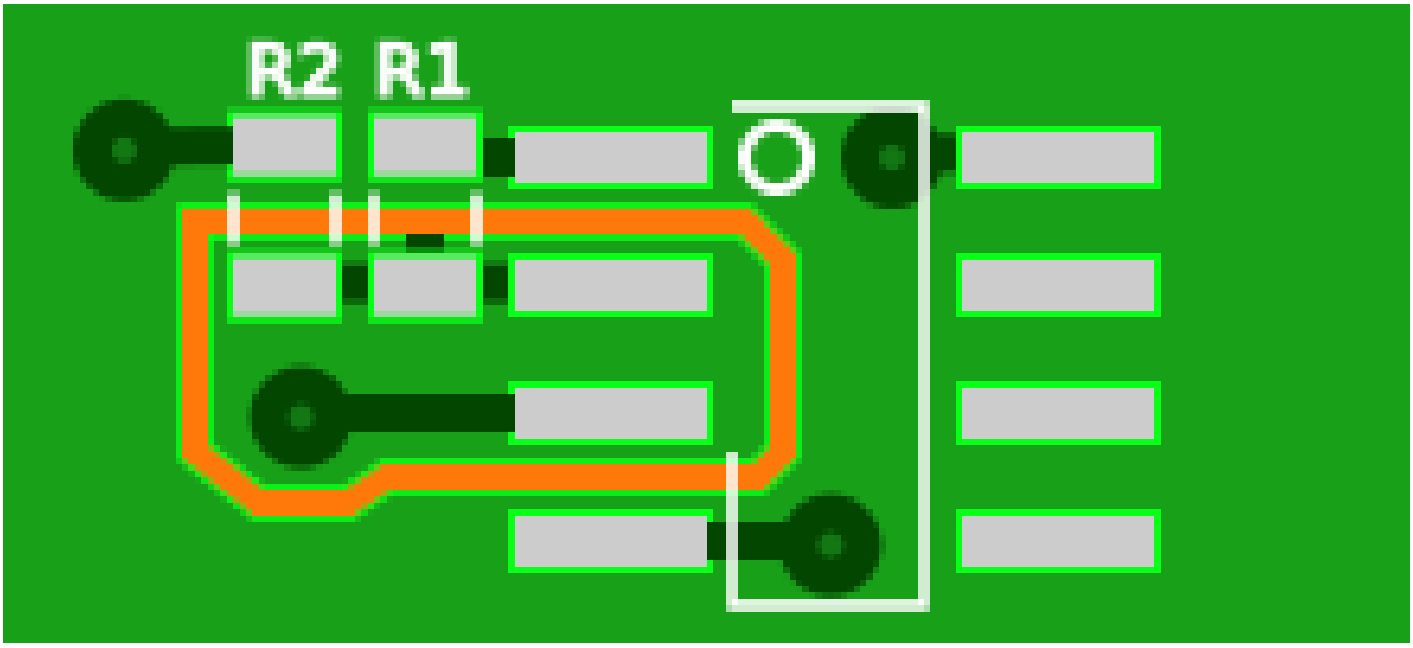

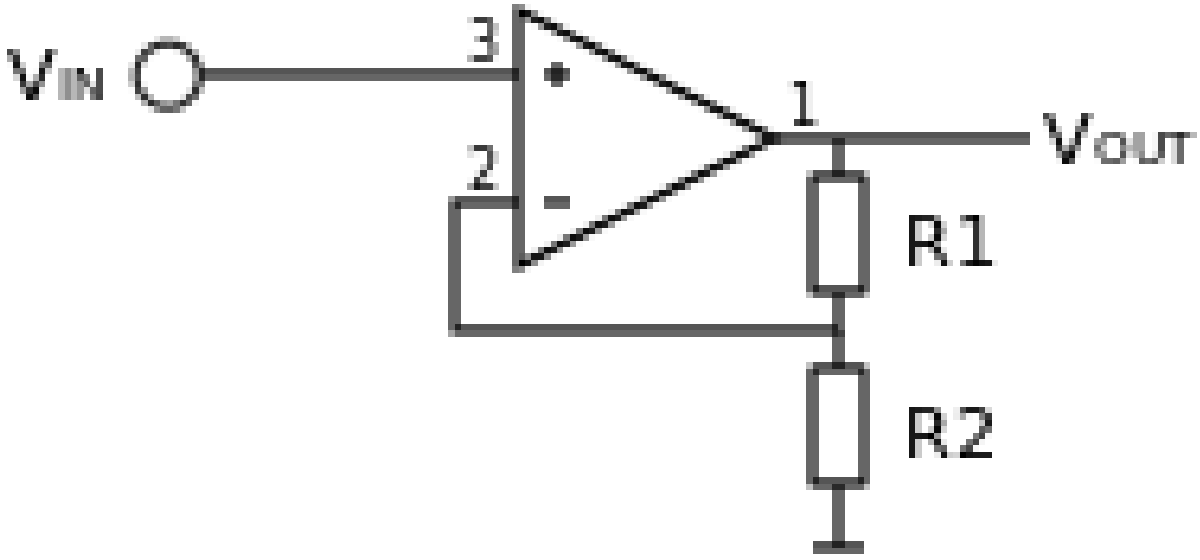

Driven Guard Wikipedia

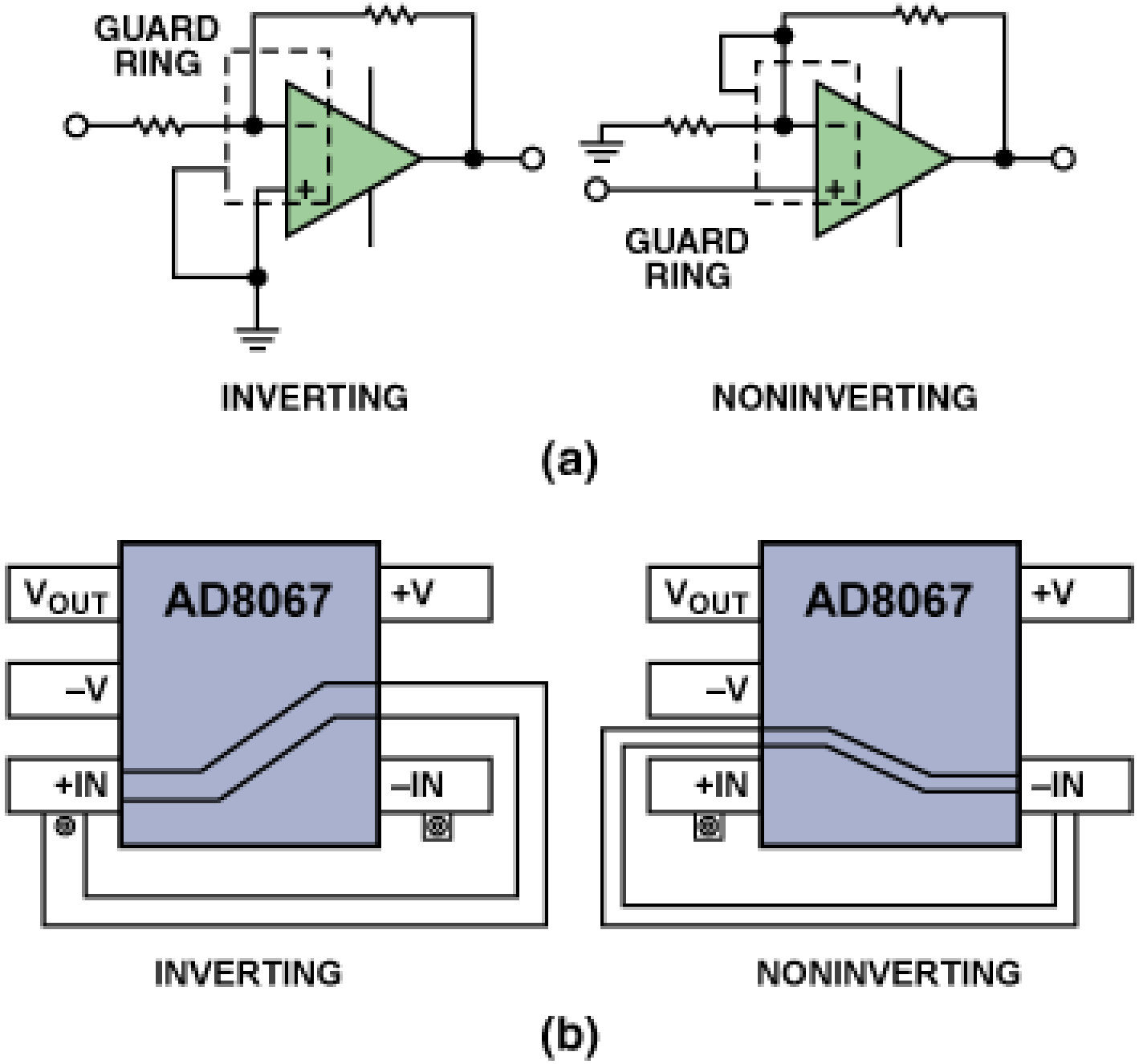

A Practical Guide To High Speed Printed Circuit Board Layout

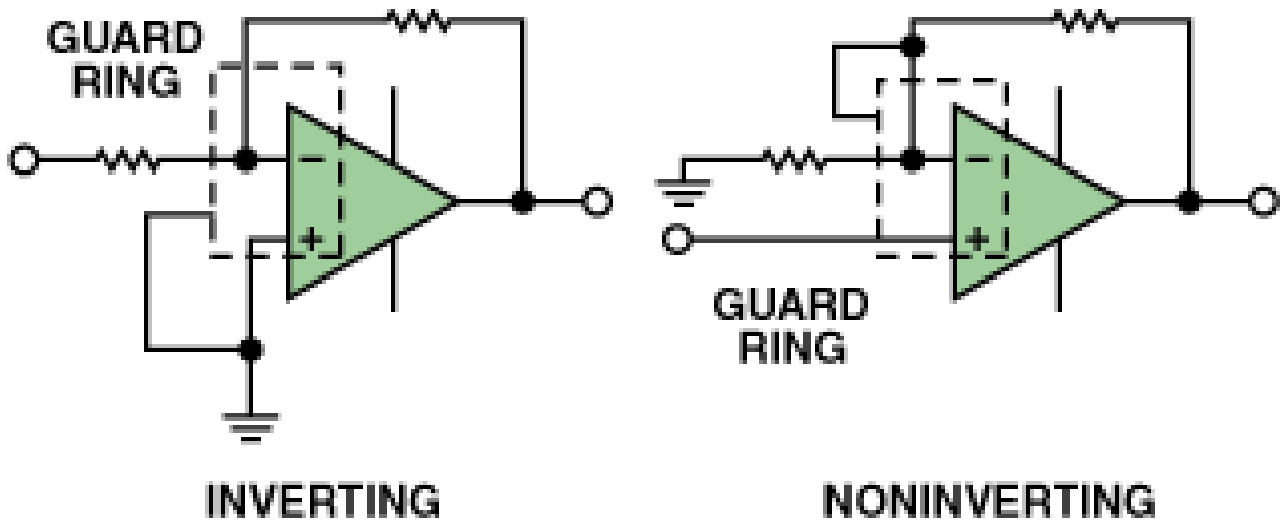

Implementing Guard Trace Ring In Pcb Design Electrical

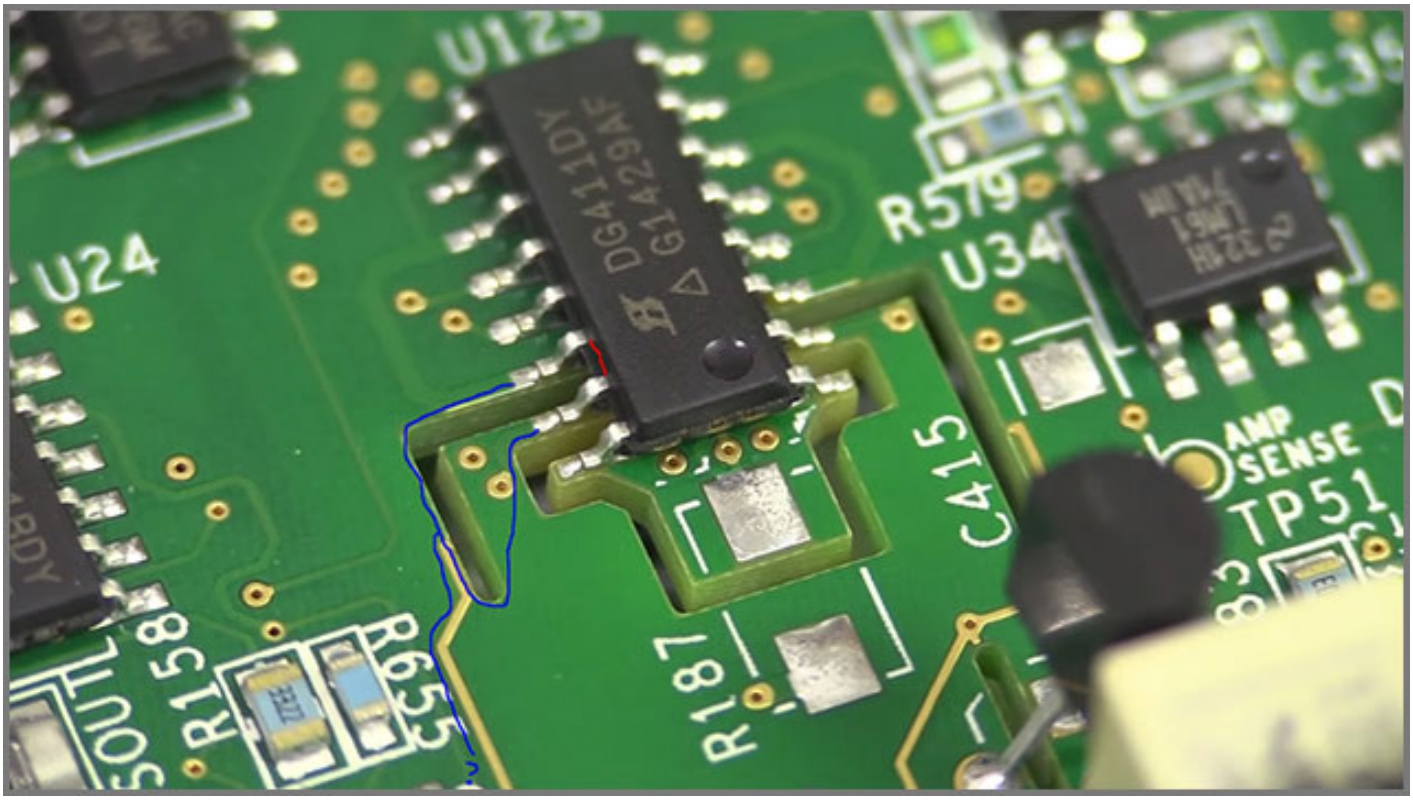

Pcb Guard Ring And The Significance In A Circuit

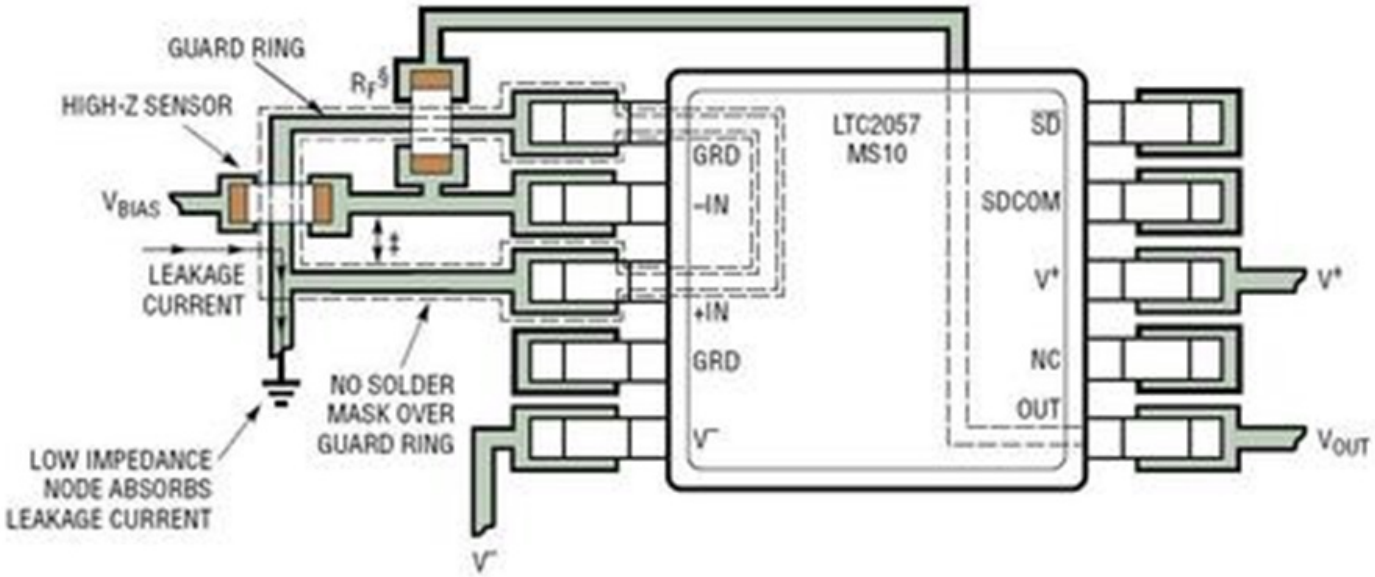

‡ NO LEAKAGE CURRENT. $V_{-IN} = V_{GRD}$
§ AVOID DISSIPATING SIGNIFICANT AMOUNTS OF POWER IN THIS RESISTOR. IT WILL GENERATE THERMAL GRADIENTS WITH RESPECT TO THE INPUT PINS AND LEAD TO THERMOCOUPLE-INDUCED ERROR. THERMALLY ISOLATE OR ALIGN WITH INPUTS IF RESISTOR WILL CAUSE HEATING.

Layout For Precision Op Amps Analog Devices

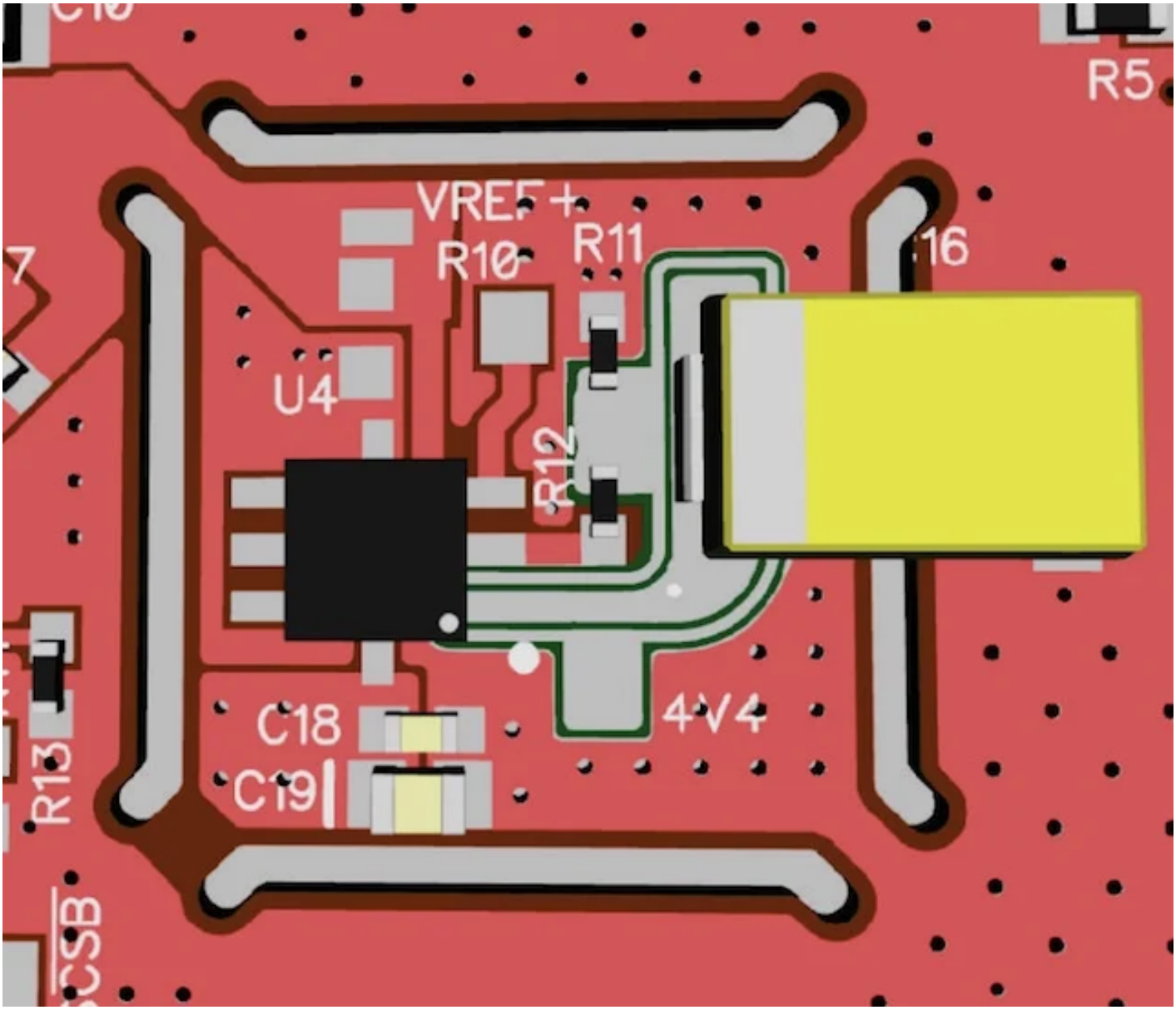

How To Turn A Schematic Into A Pcb Layout Pcb Design For A Custom

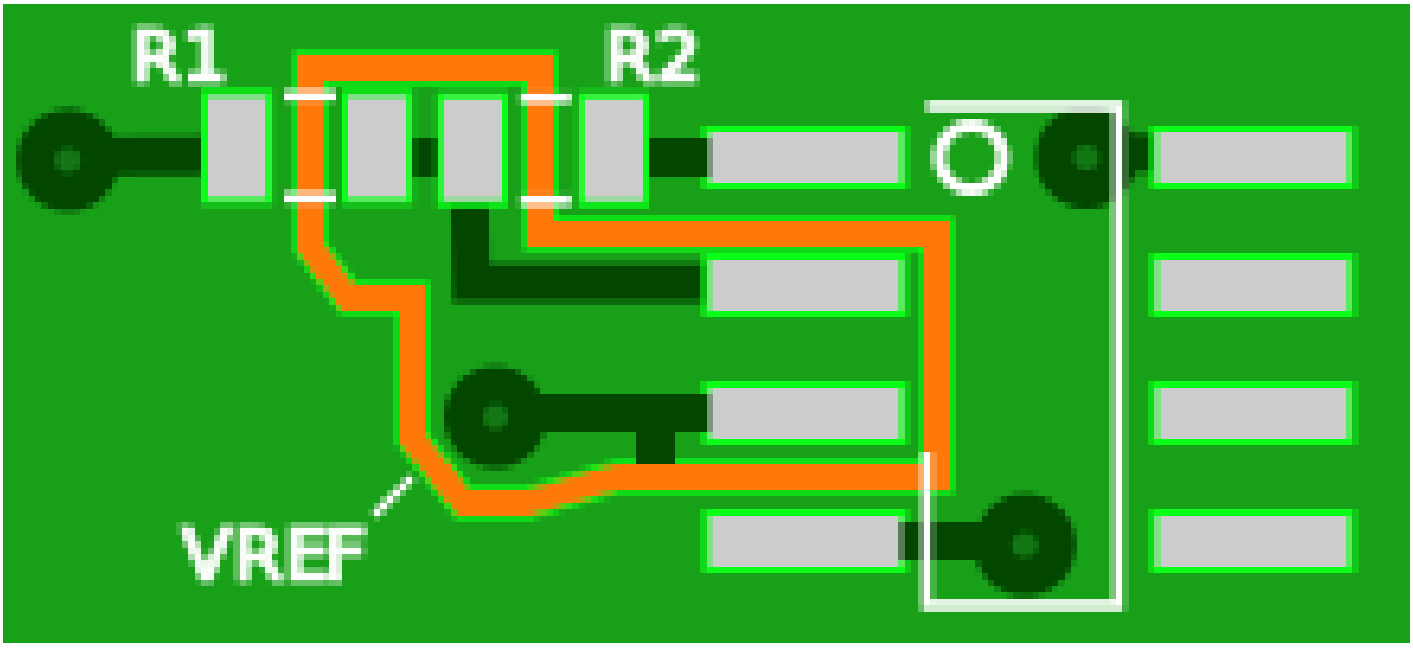

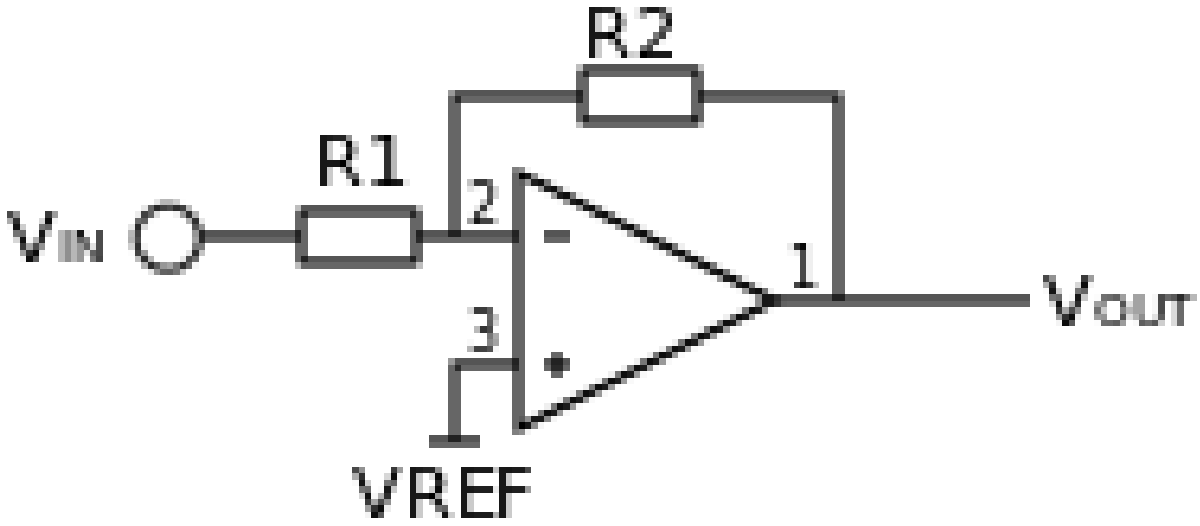

Driven Guard Wikipedia

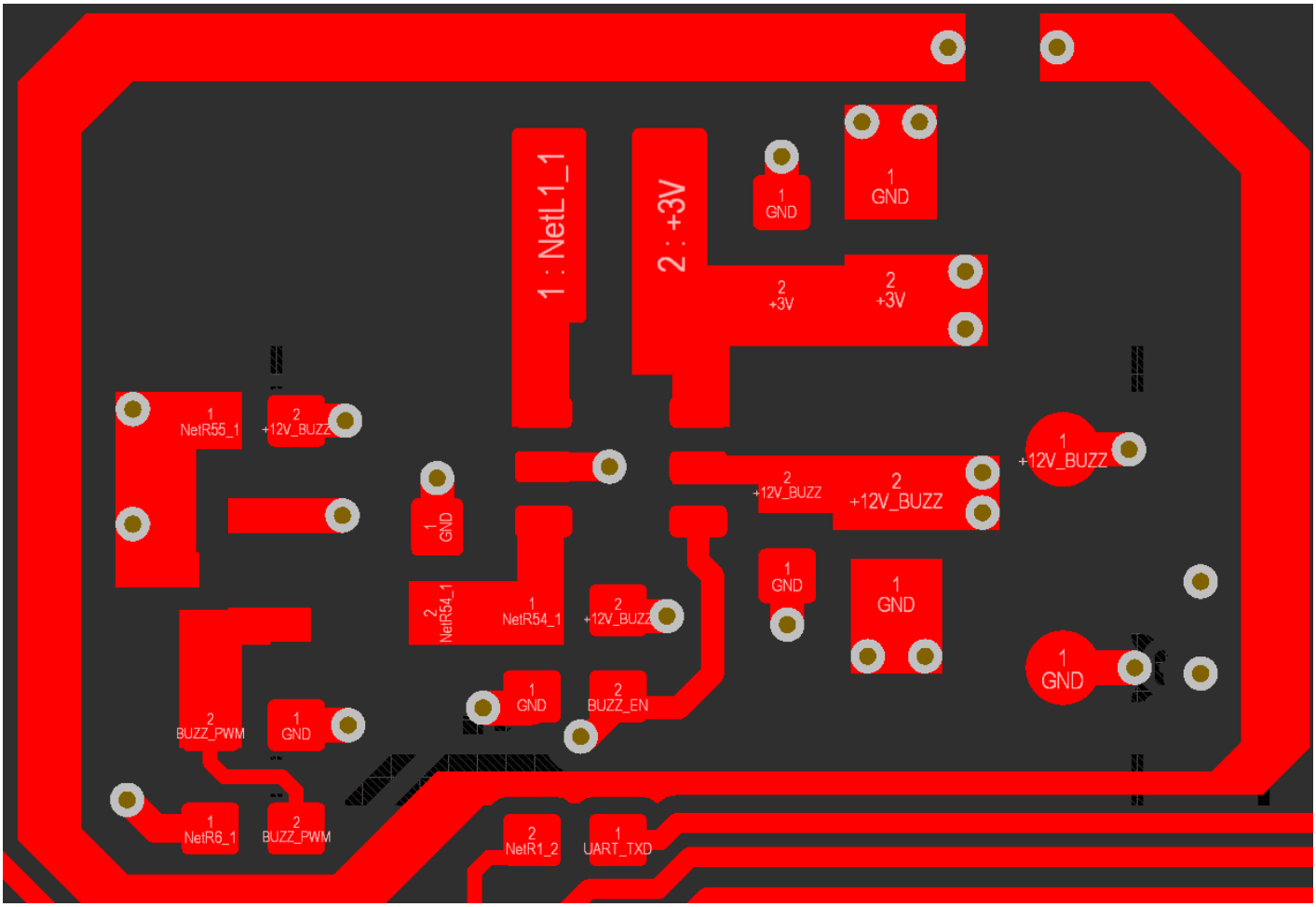

Pcb Gnd Guard Ring Electrical Engineering Stack Exchange

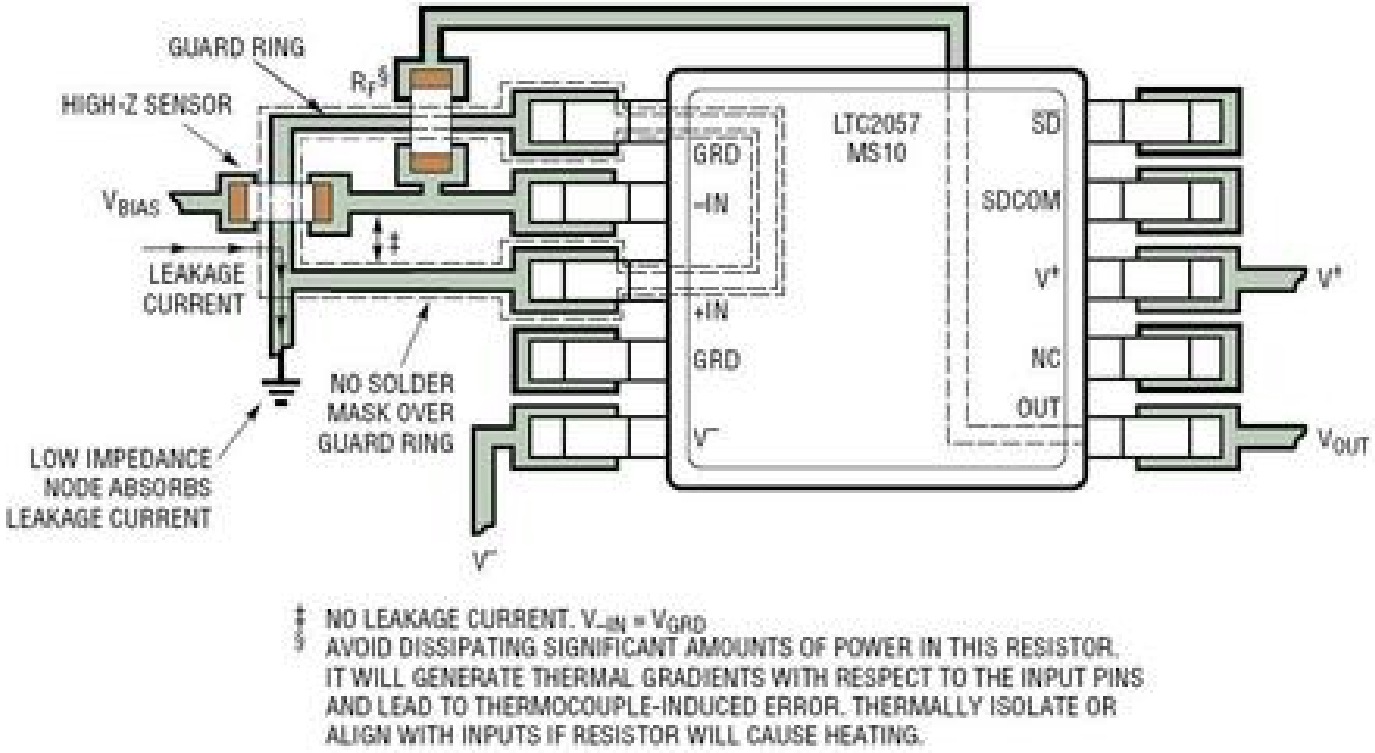

Layout For Precision Op Amps Analog Devices

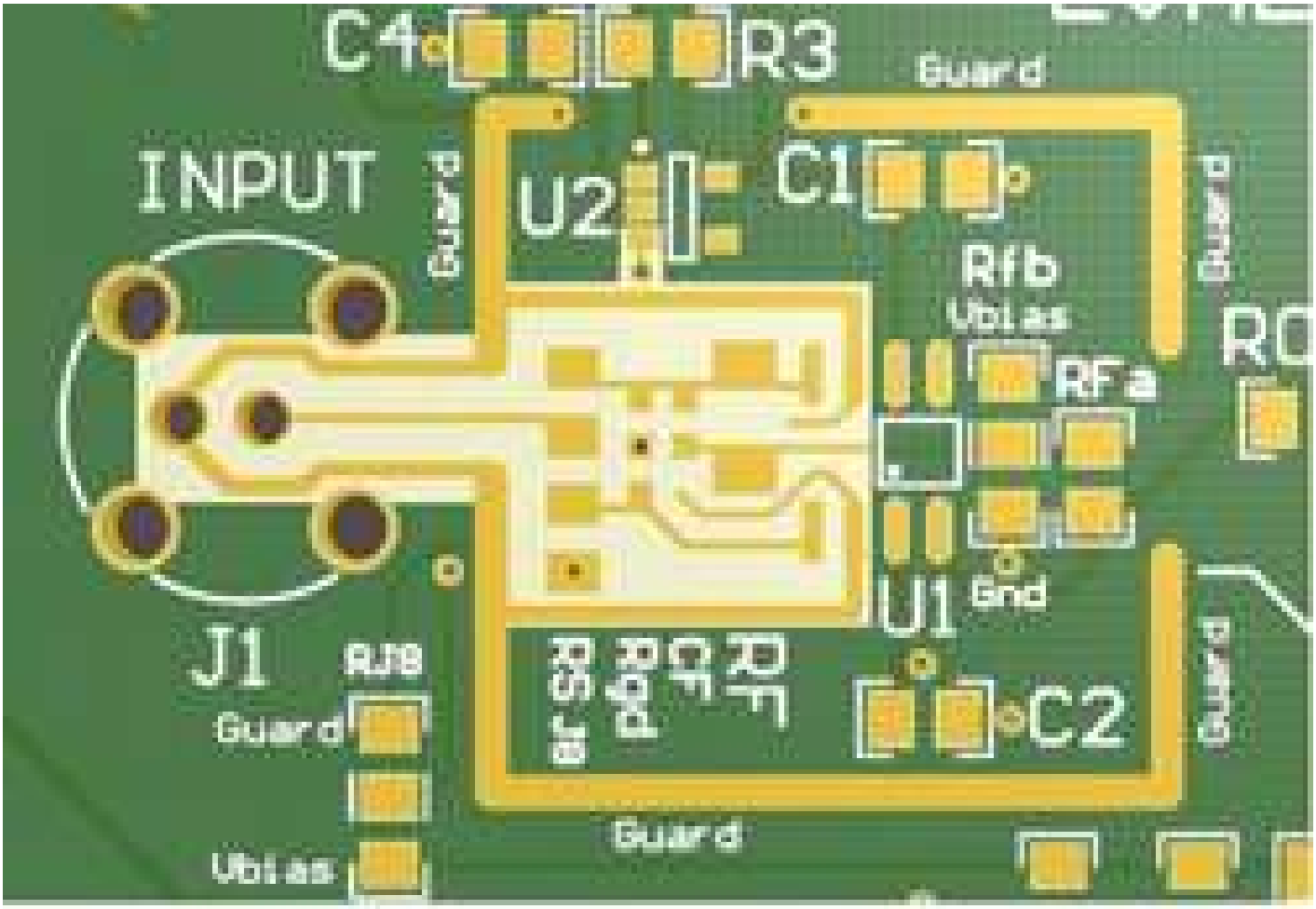

Figure 3 The thick copper trace on this PCB acts as a guard ring. The goldplated traces prevent corrosion. Remove the solder mask in the guarded area to reduce leakage.

Edn Design Femtoampere Circuits With Low Leakage Part 1

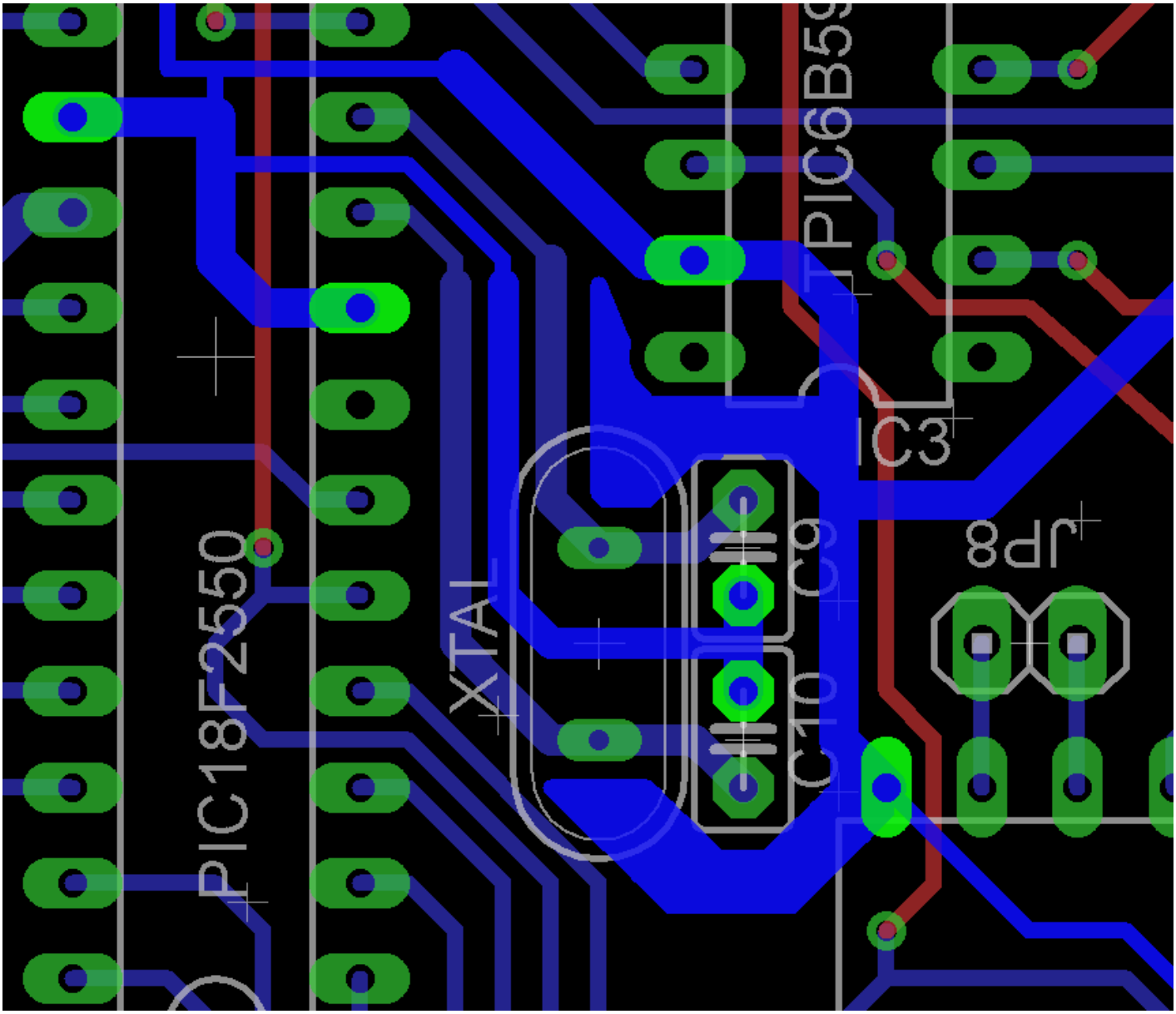

How Good Is My Xtal Design On My Pcb Electrical Engineering

Http Www Pcbtvi Com Media En Other Electronica Femtoammeter Design Module For Charged Particle Detection Gustavo Castro Pdf

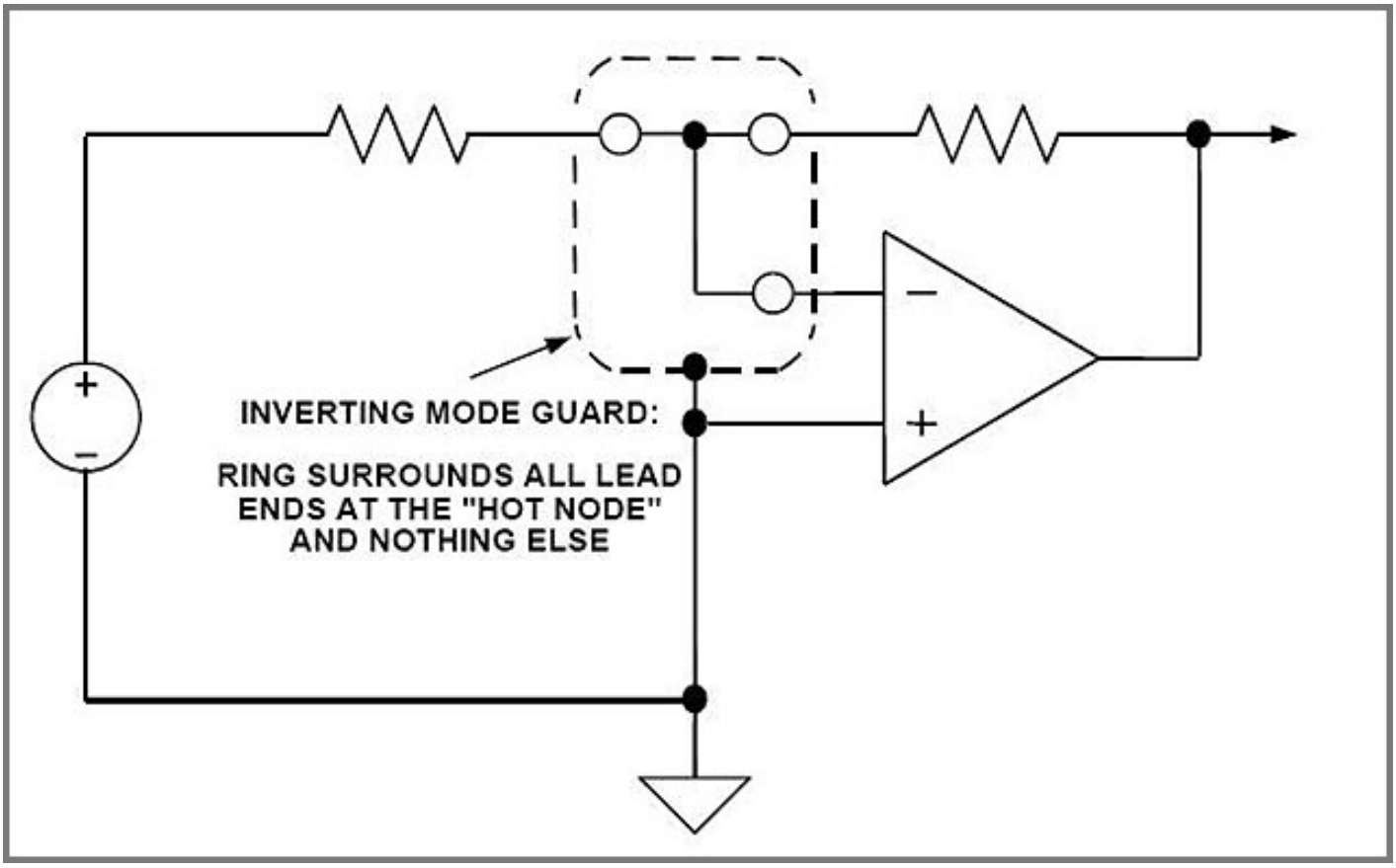

Pcb Guard Ring And The Significance In A Circuit

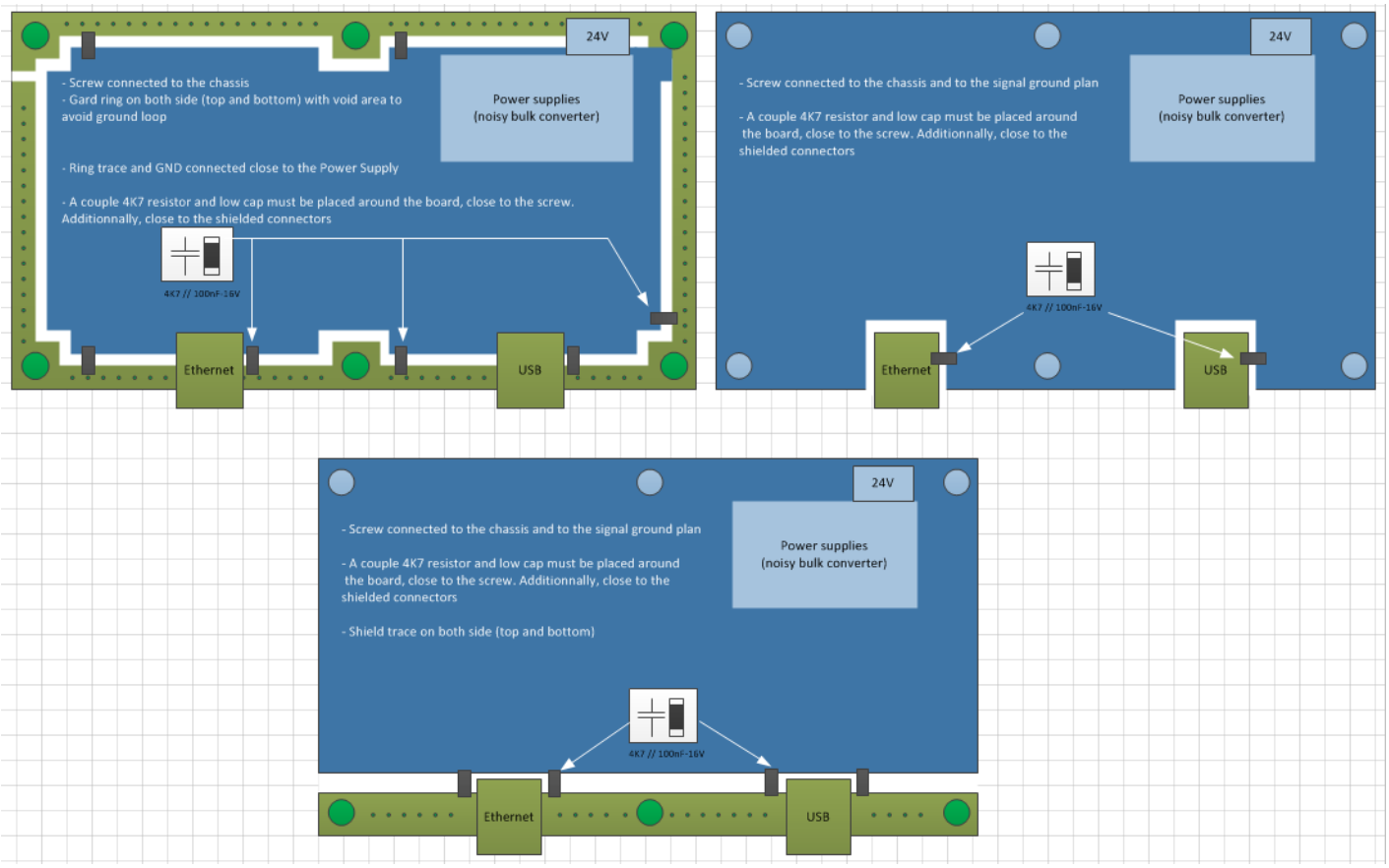

Resolved Am5728 Pcb Layout Guard Ring And Internal Emc

When And Why To Use A Pcb Guard Ring Tempo

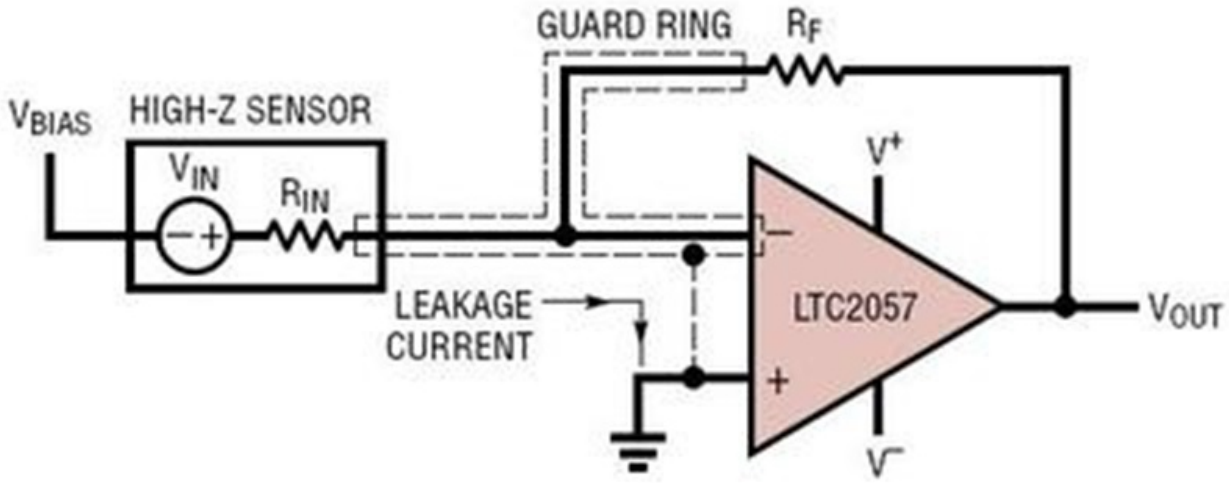

LEAKAGE CURRENT IS ABSORBED BY GROUND INSTEAD OF CAUSING A MEASUREMENT ERROR.

Layout For Precision Op Amps Analog Devices

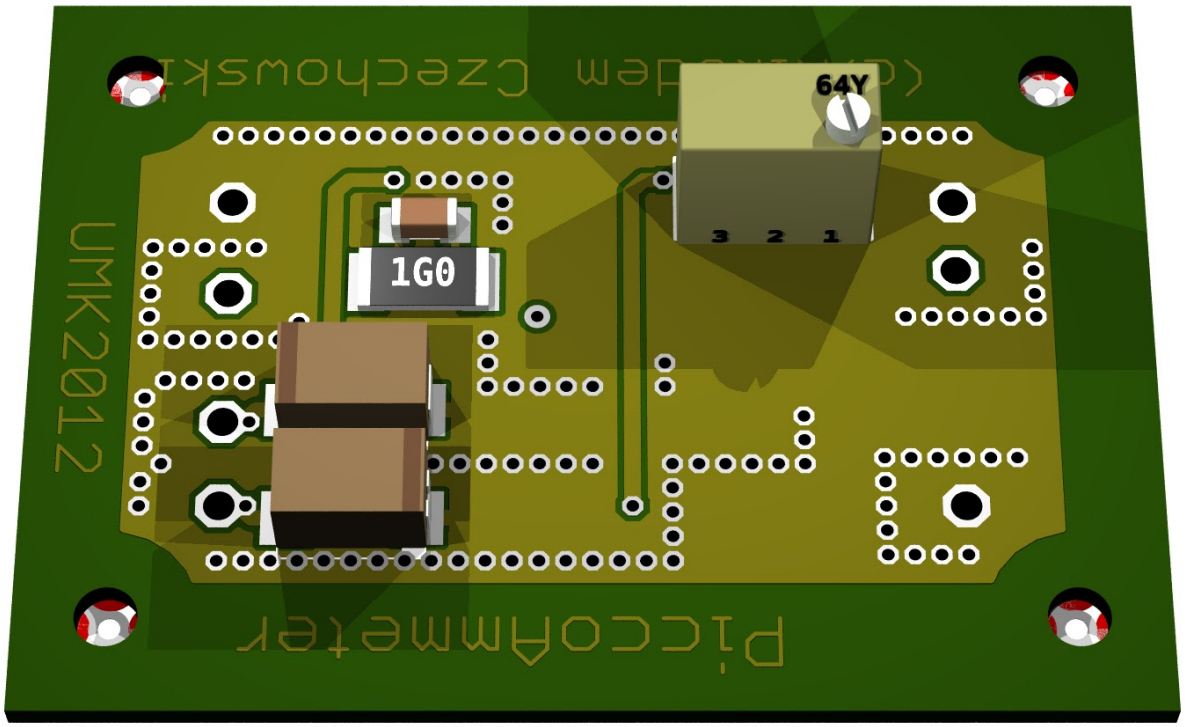

Work Work Work Precise Ammeter Part 2

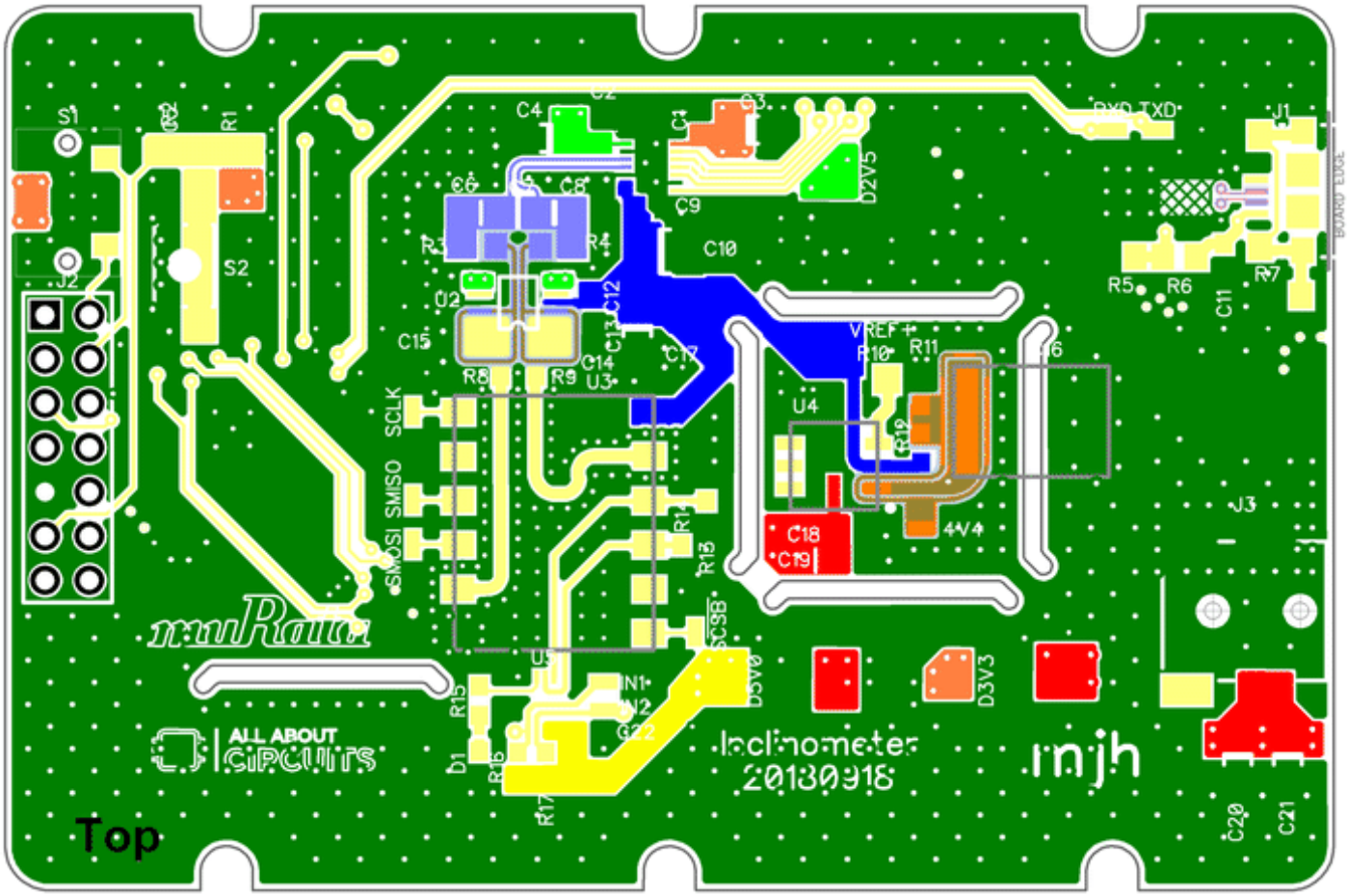

Https Encrypted Tbn0 Gstatic Com Images Q Tbn 3aand9gcthz6yjdi4tzrcfy Abgsx 3pid0g0v83opopdfds9ritomtx W

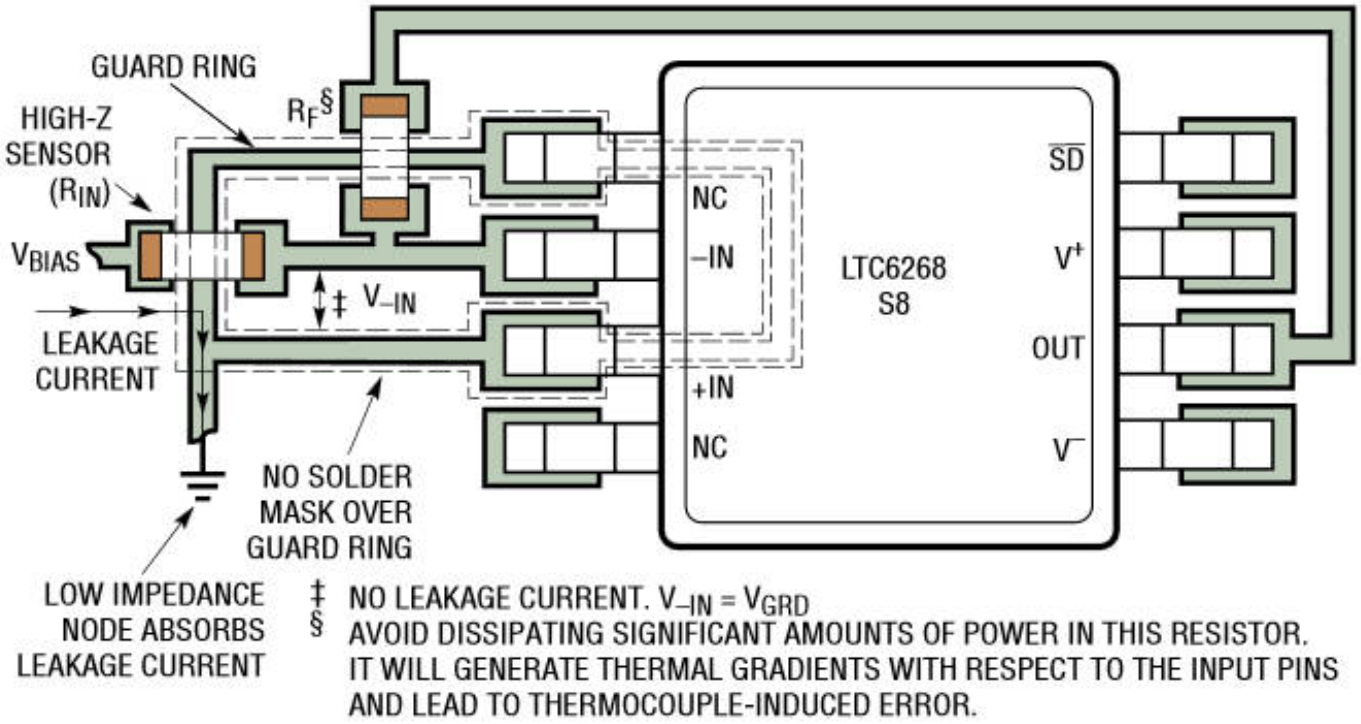

Sub Picoamp Input Op Amp Offers High Gain Bandwidth

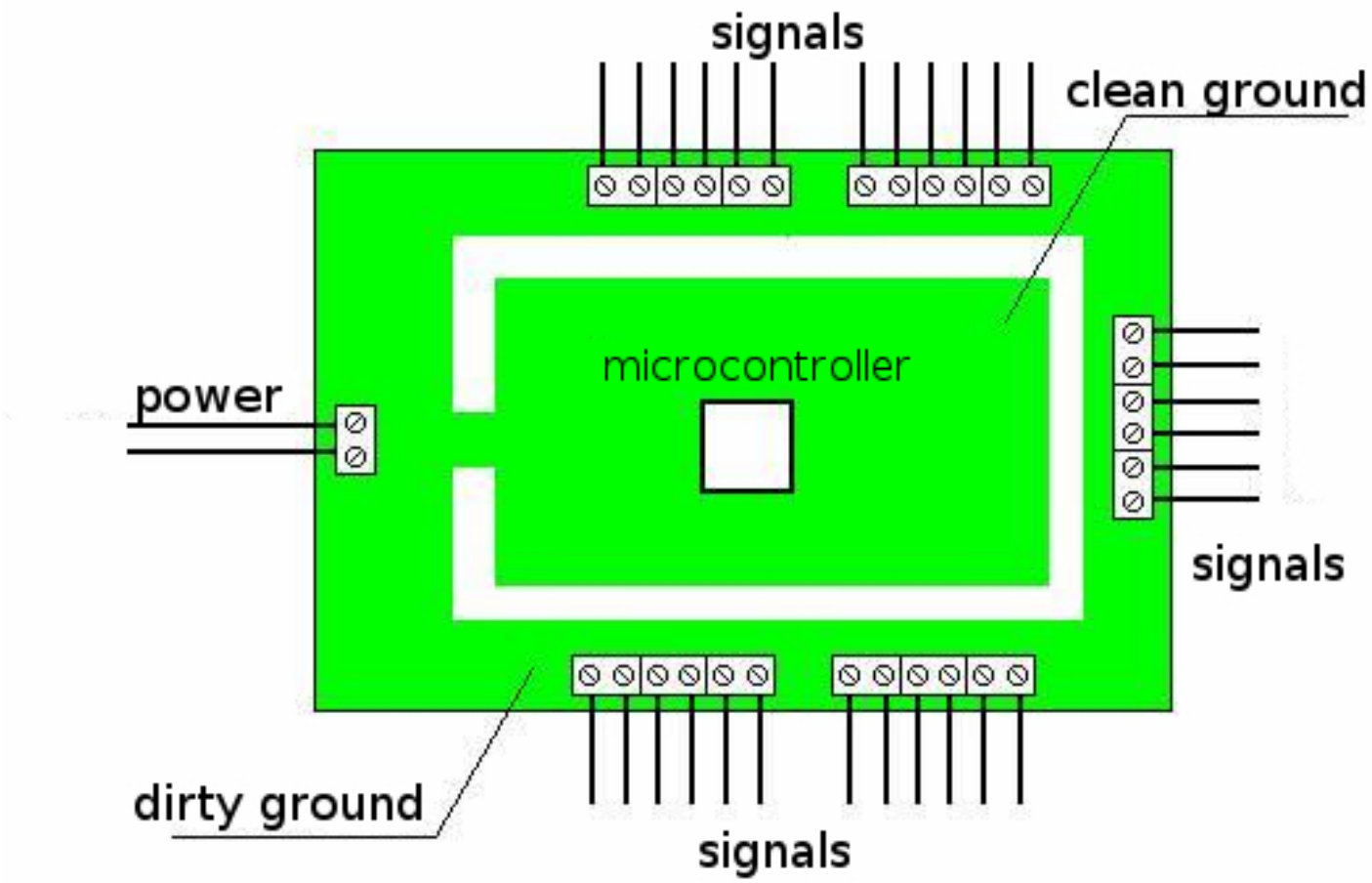

Ground Ring Good Or Bad Electrical Engineering Stack Exchange

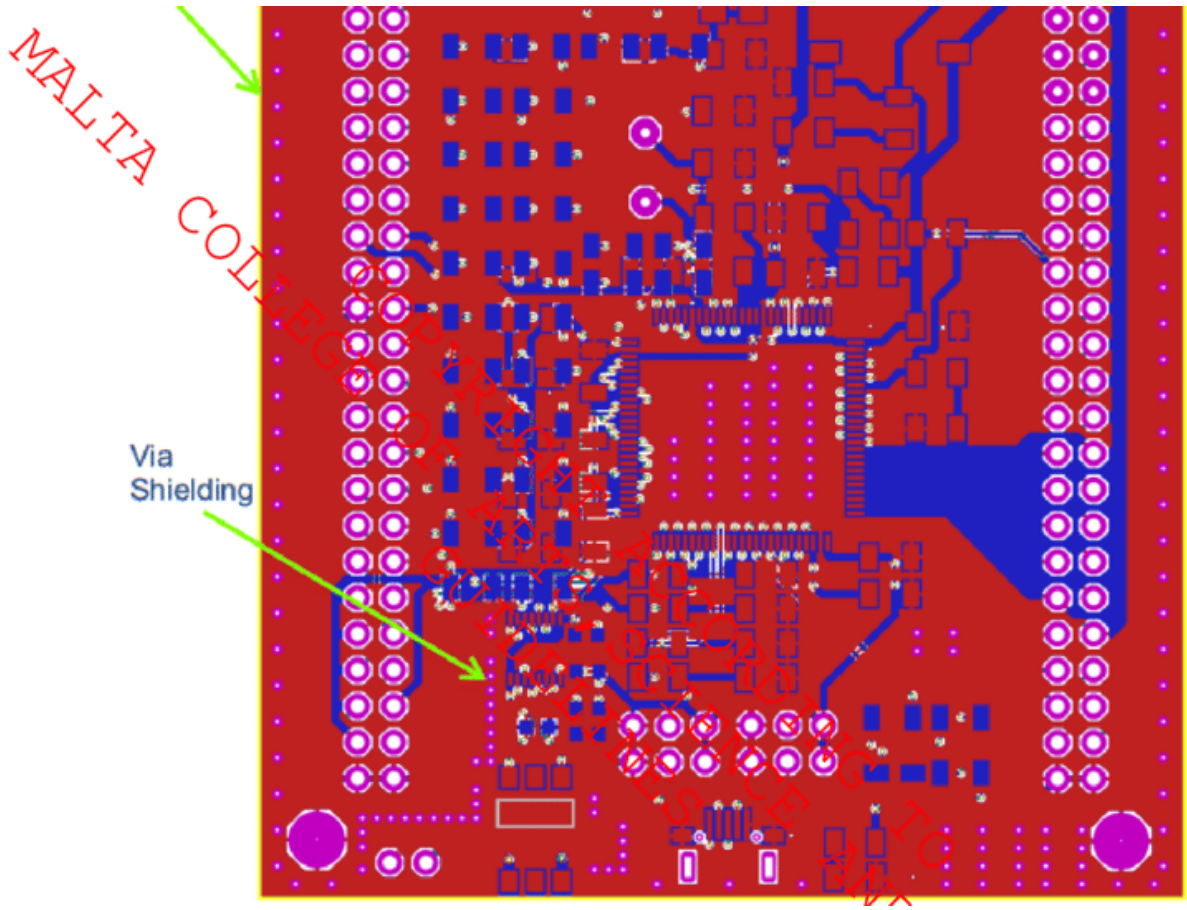

Pcb Layout Showing The Via Shielding Via Stitching Ground Plane

crystal and the load capacitors is laid out symmetrically.

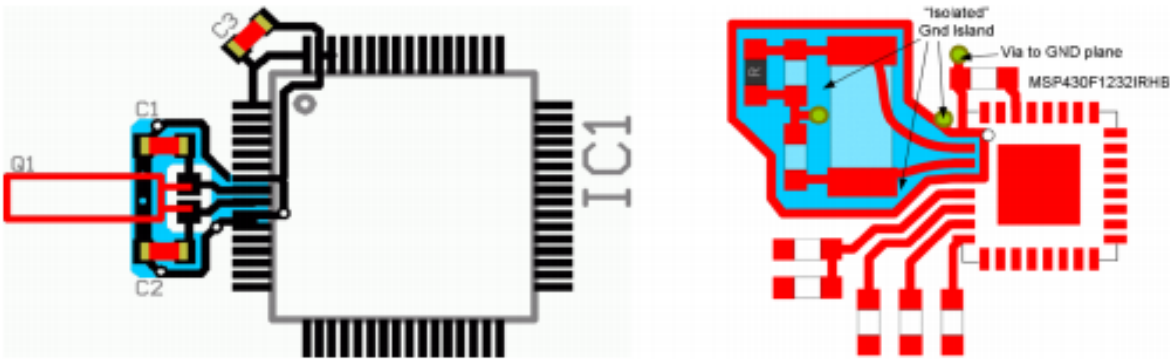

NOTE: The layout on the right side includes a resistor between XOUT and V_{SS}. The LFXT1 oscillator of MSP430x1xx (see data sheet) in LF-mode requires a resistor of ≥5.1 MΩ from XOUT to V_{SS} when V_{CC} < 2.5 V, to compensate for decreasing drive level with lower supply voltages.

Figure 8. Layout With External Capacitors and Ground Guard Ring (XIN and XOUT Neighboring Pins Are NC Pins) Examples for MSP430F41x and MSP430F1232IRHB

Resolved Pcb Design Around 32768hz Crystal Msp Low Power

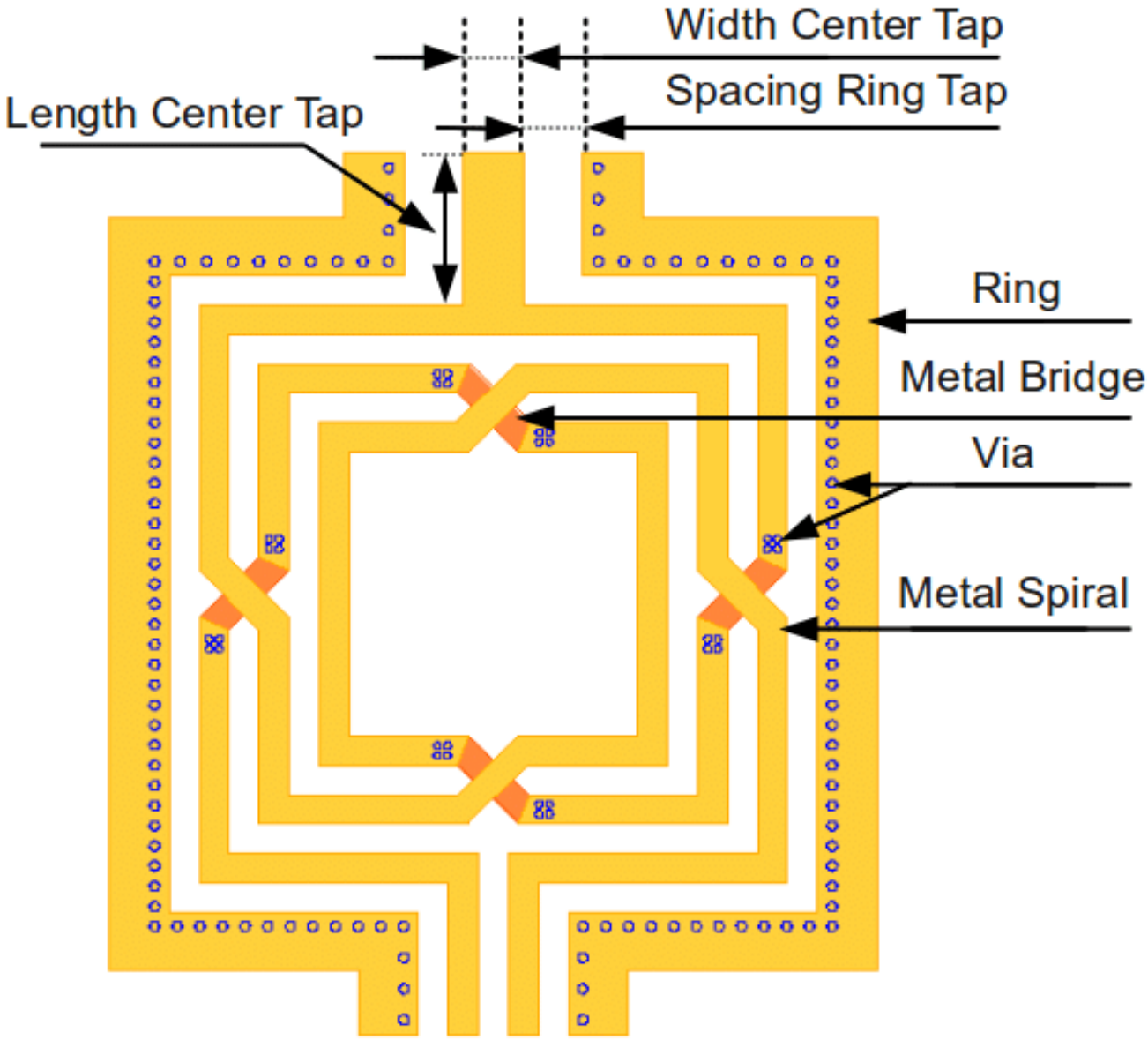

3d View Of Inductors A No Guard Ring B Guard Ring C Guard

Http Www Pcbtvi Com Media En Other Electronica Femtoammeter Design Module For Charged Particle Detection Gustavo Castro Pdf

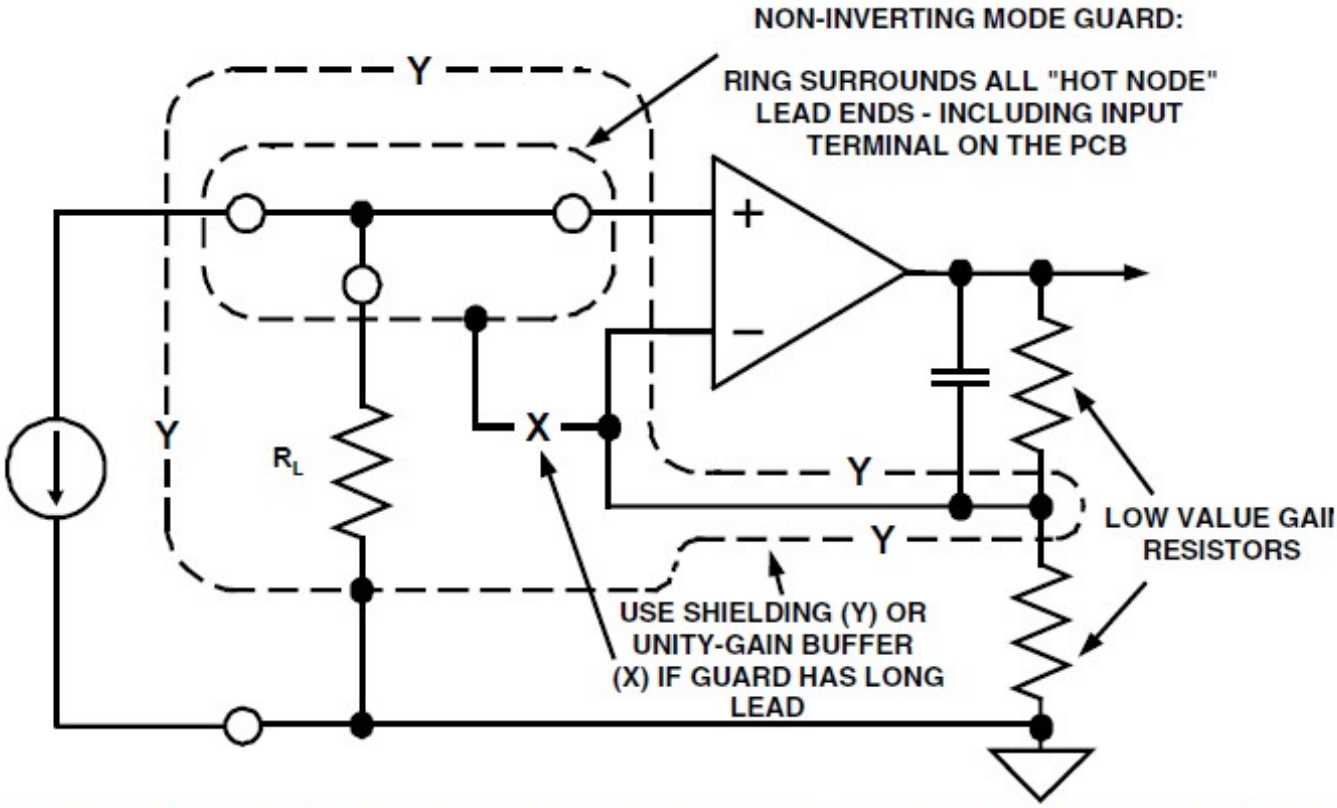

Figure 12.14: *Noninverting Mode Guard Encloses all Op Amp Noninverting Input Connections Within a Low Impedance, Driven Guard Ring*

Printed Circuit Board Pcb Design Issues Engineering Technical

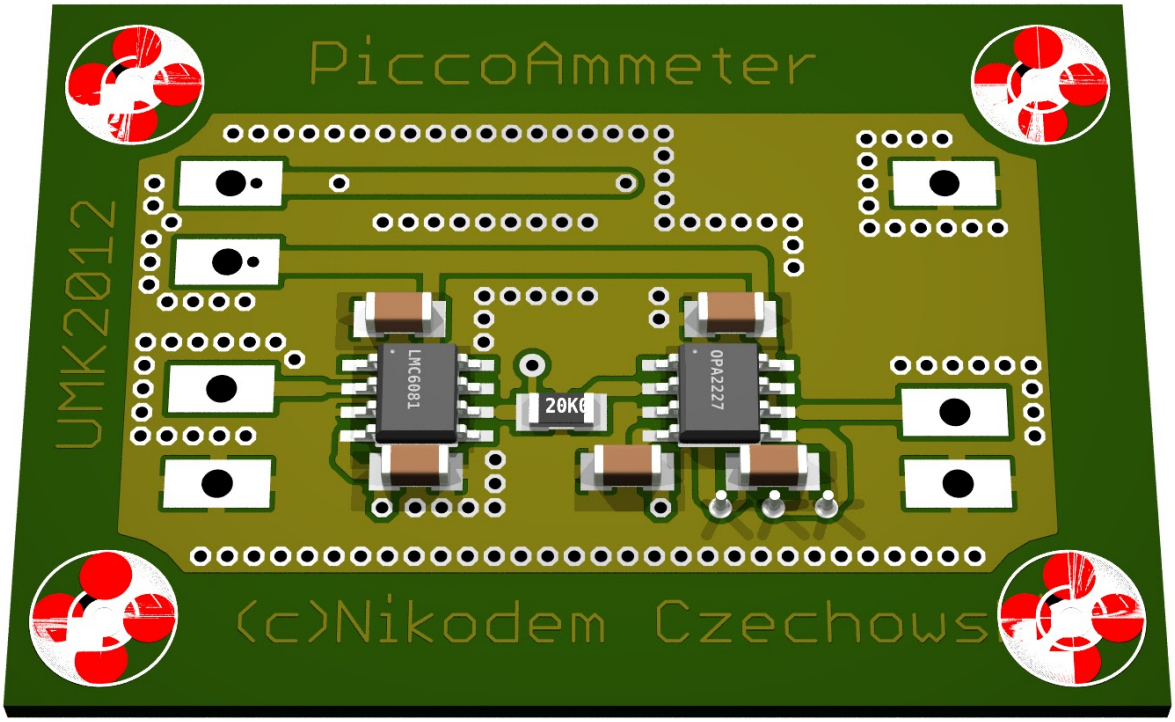

Work Work Work Precise Ammeter Part 2

Figure 4. Schematic of External Components

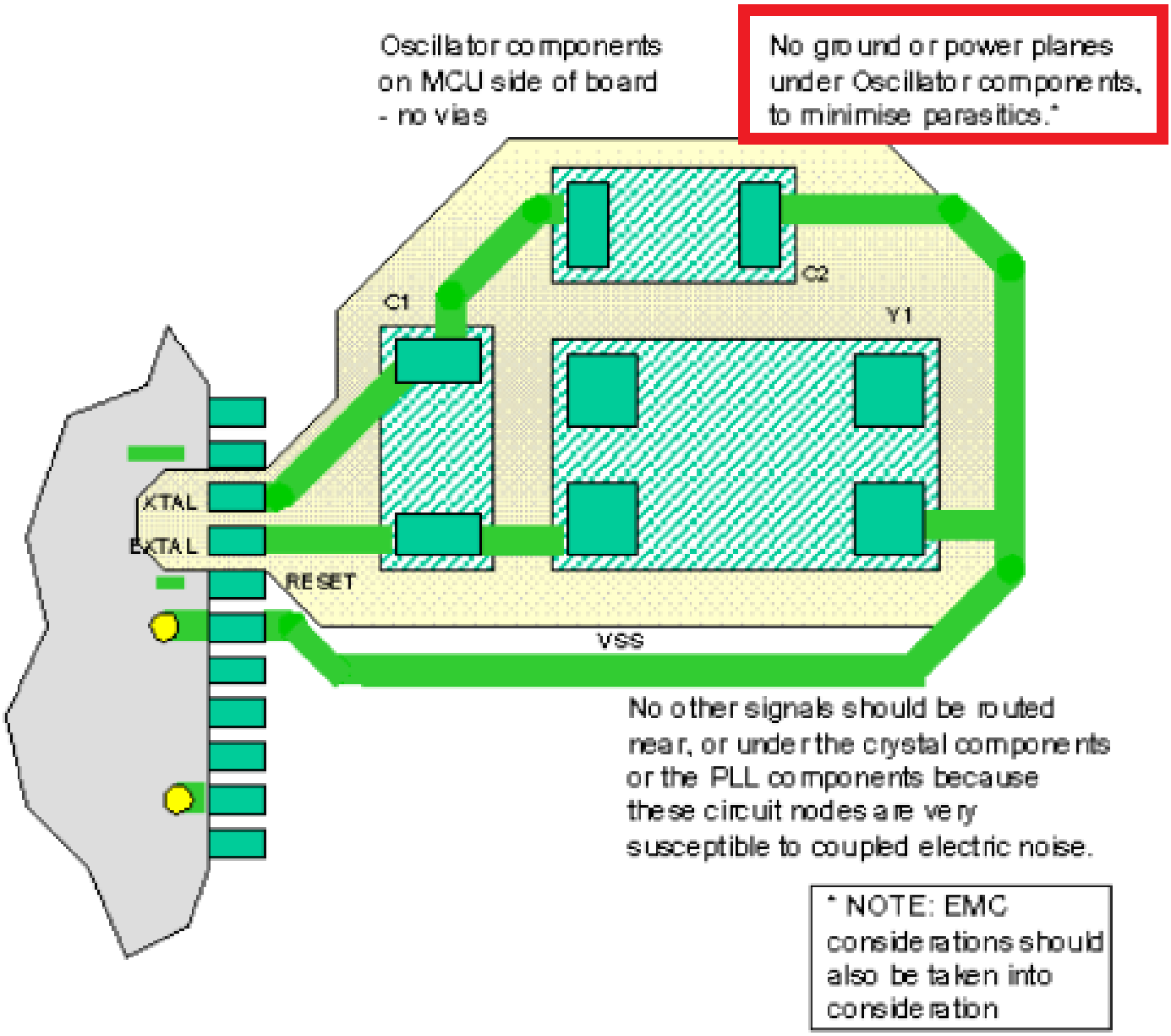

Figure 5. Recommended PCB Layout

Should There Be Any Pcb Ground Plane Under A 16 Mhz Oscillator

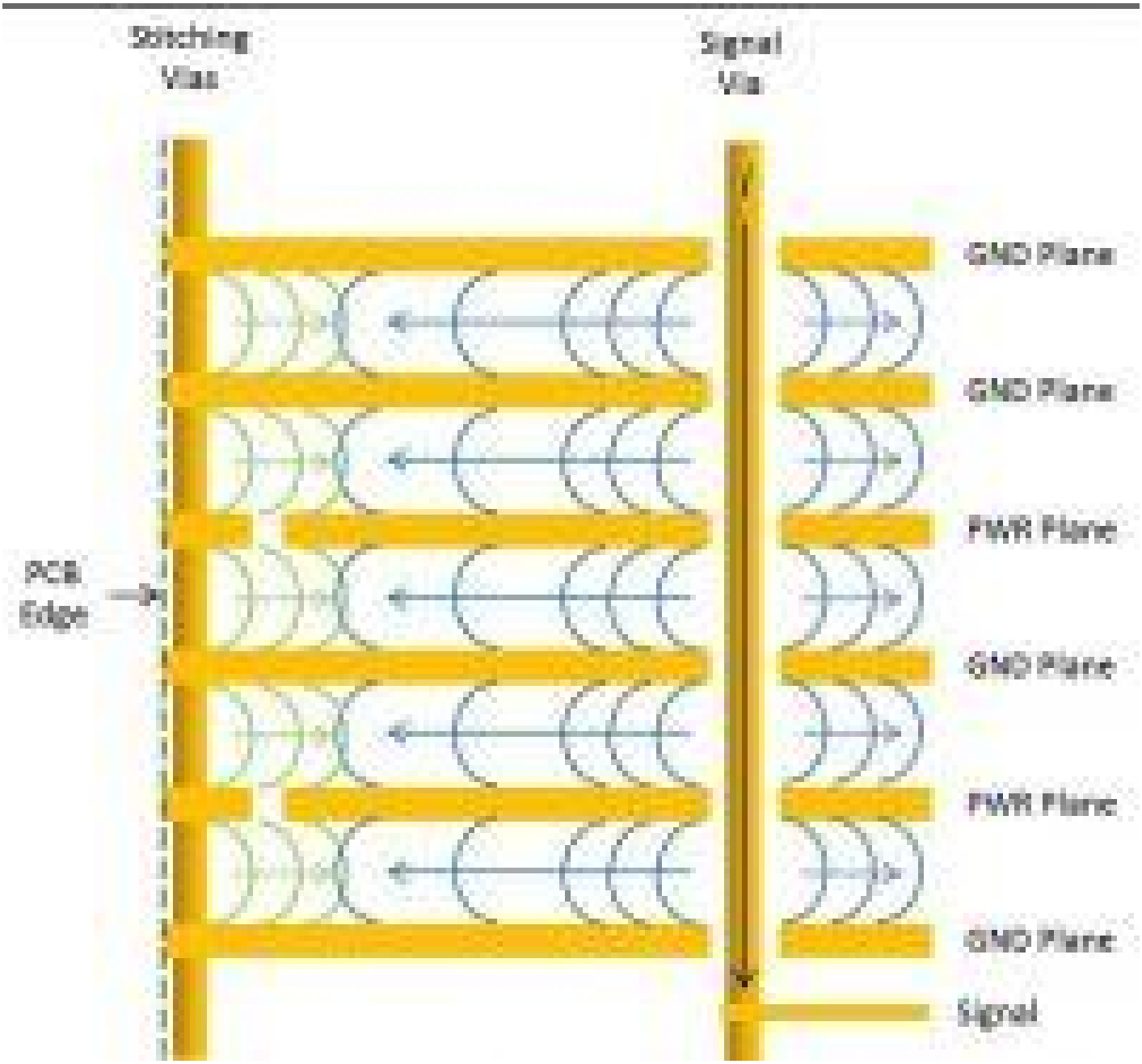

Forum For Electronics

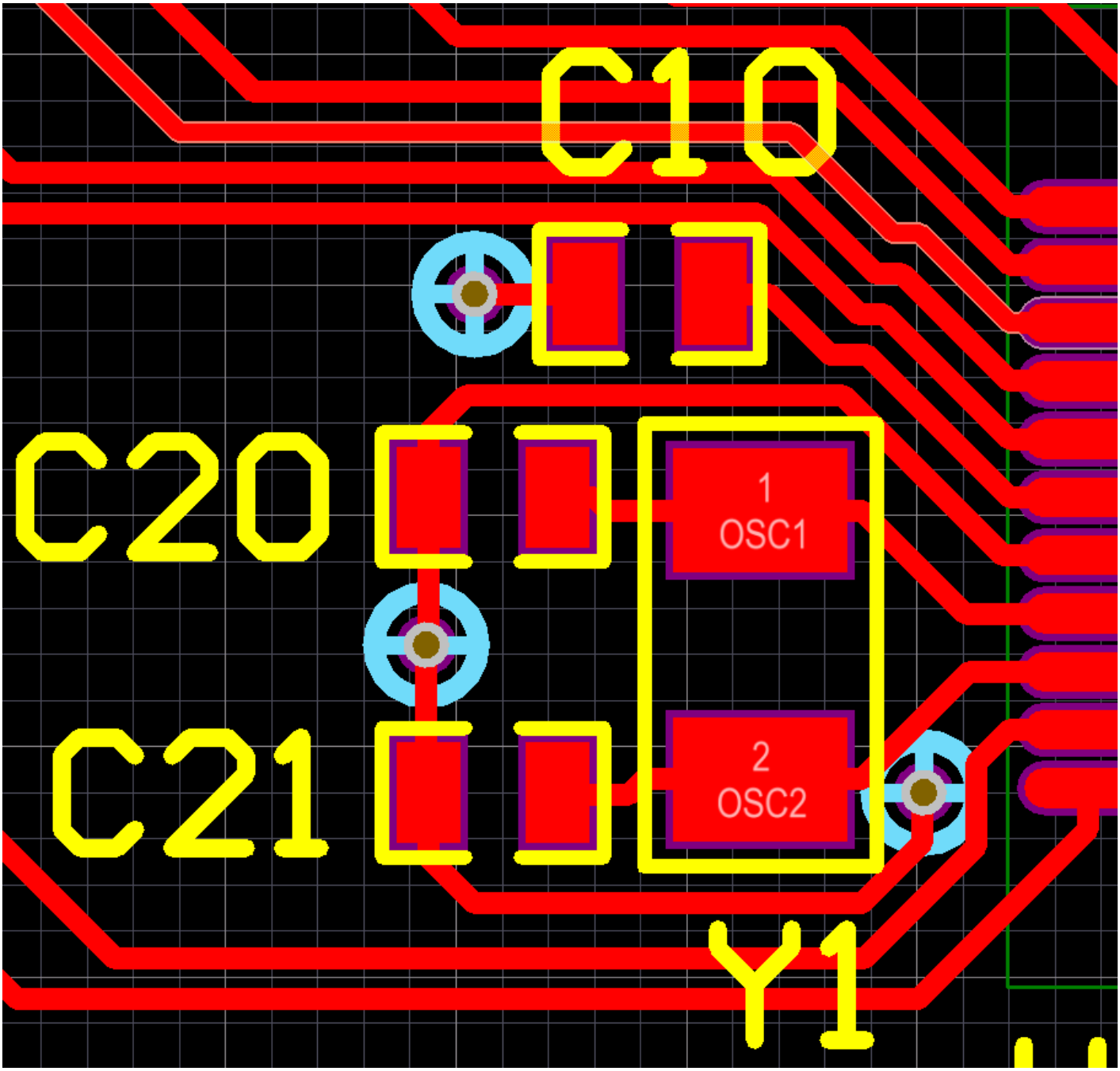

Placement Routing Of Decoupling Cap Straddling Oscillator Guard

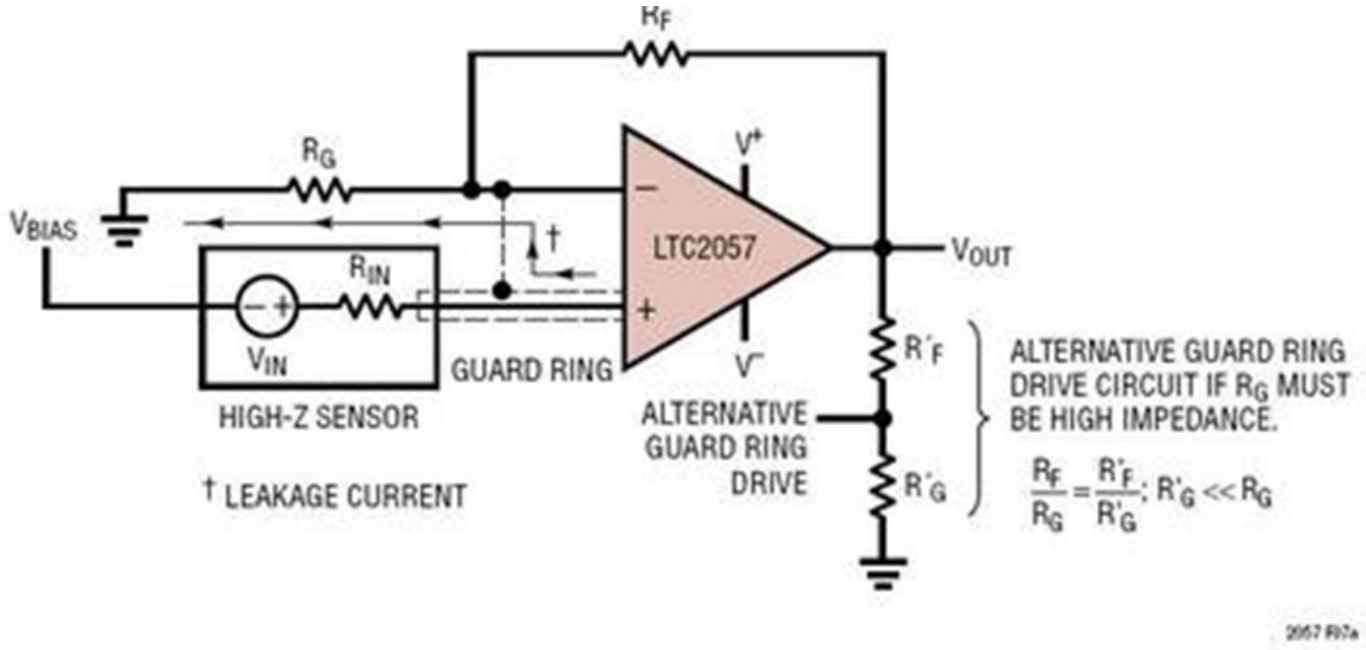

Layout For Precision Op Amps Analog Devices

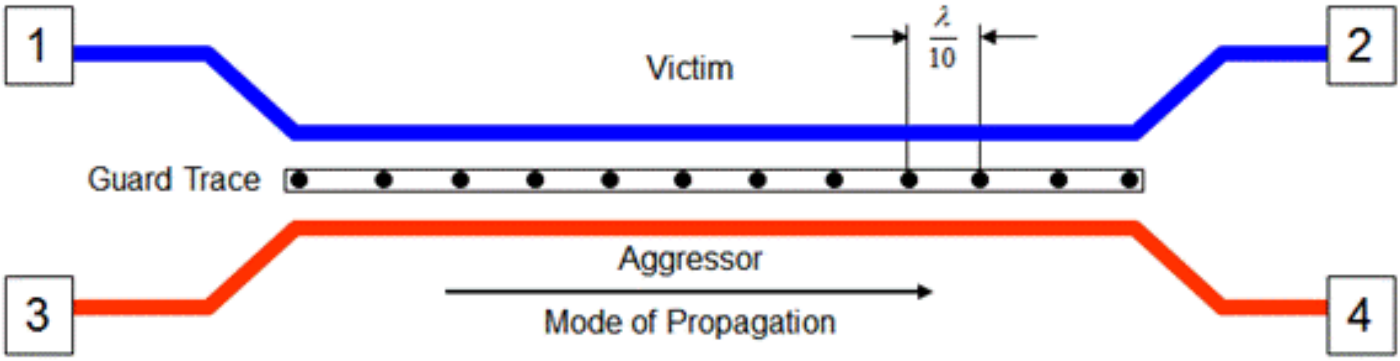

Are Guard Traces Worth It Bert Simonovich S Design Notes

Http Ww1 Microchip Com Downloads Cn Appnotes Cn540604 Pdf

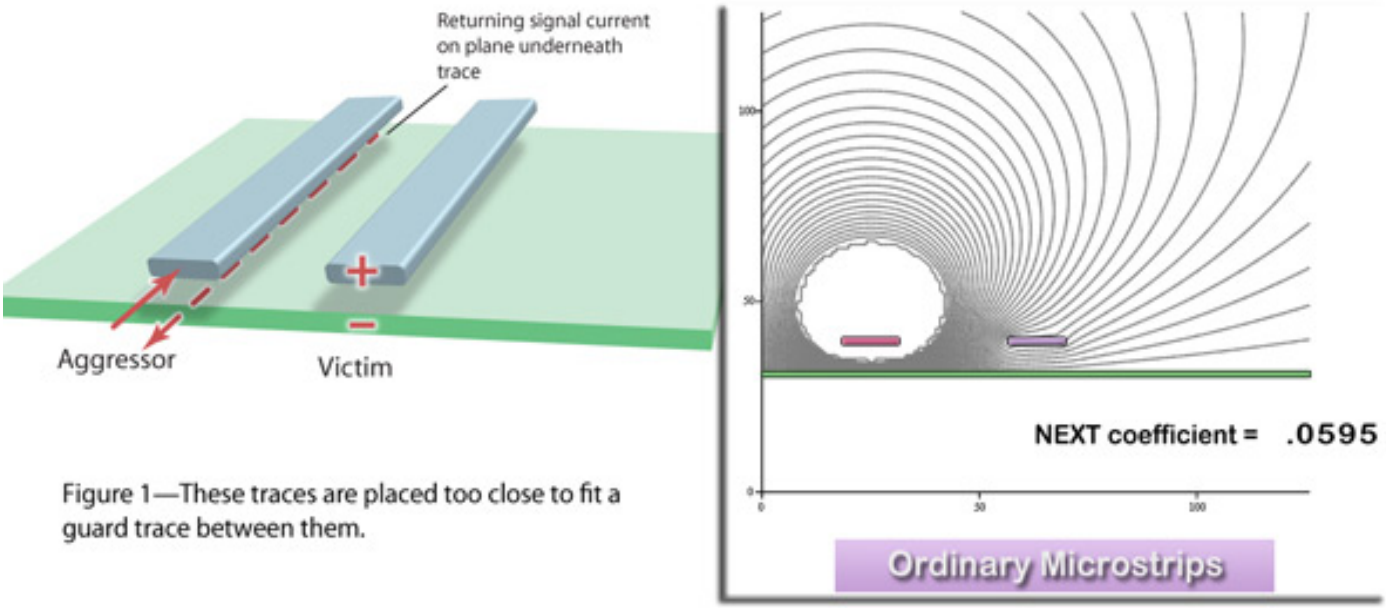

Figure 1—These traces are placed too close to fit a guard trace between them.

Guard Traces

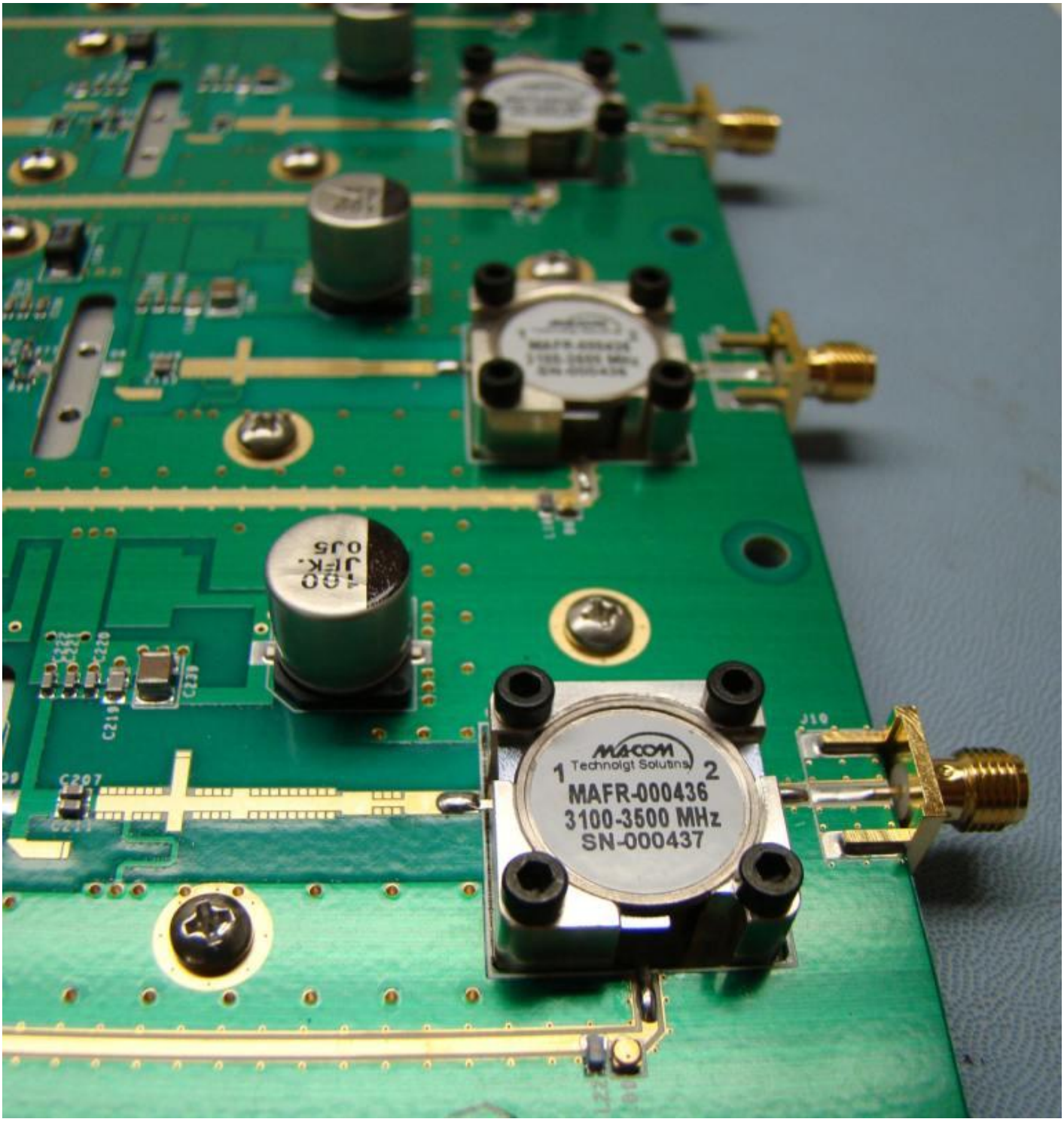

Pcb Design Services Saturn Pcb Design Pcb Design Service

Https Www Lumileds Com Uploads 678 Ab188 Pdf

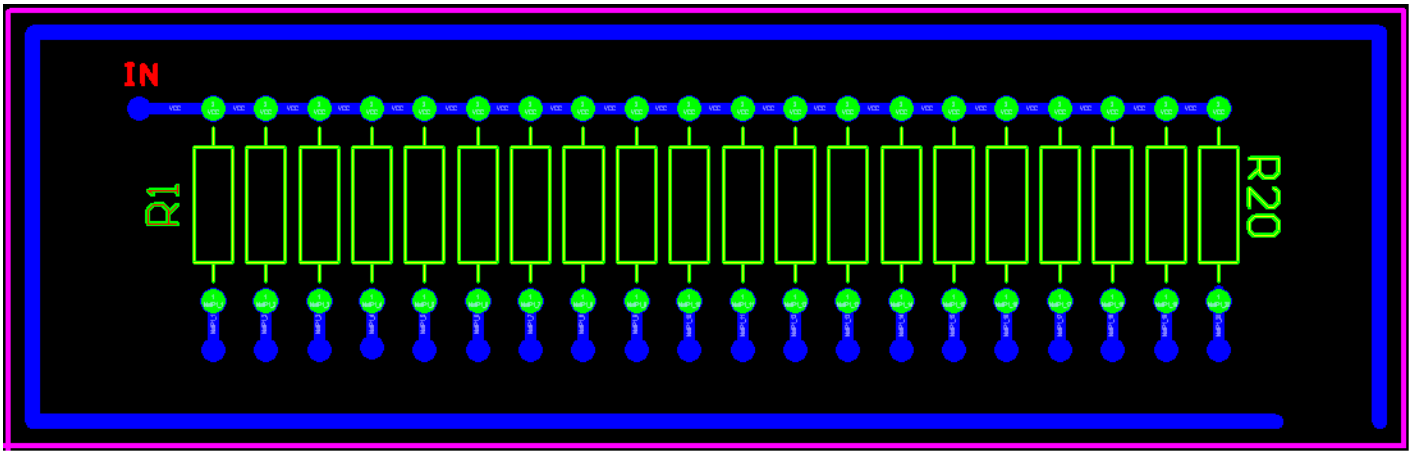

Implementing Guard Trace Ring In Pcb Design Electrical

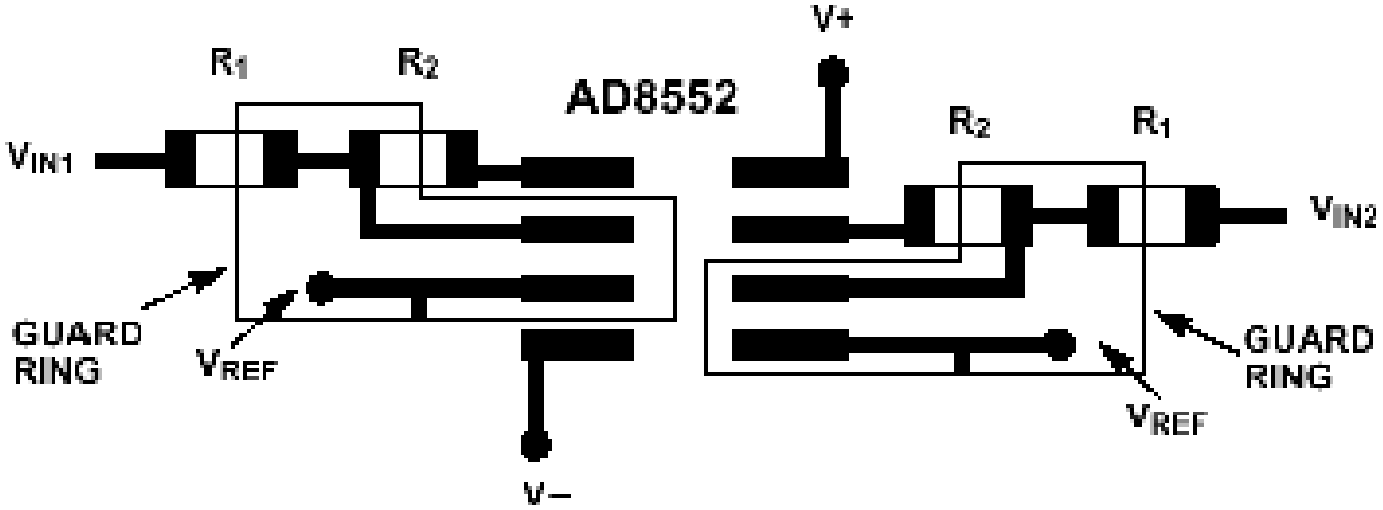

Using Auto Zero Amplifiers Optimizing Circuits With Ultra

Https Cherryclough Com Media File Emc 20for 20pcb Part 204 Pdf

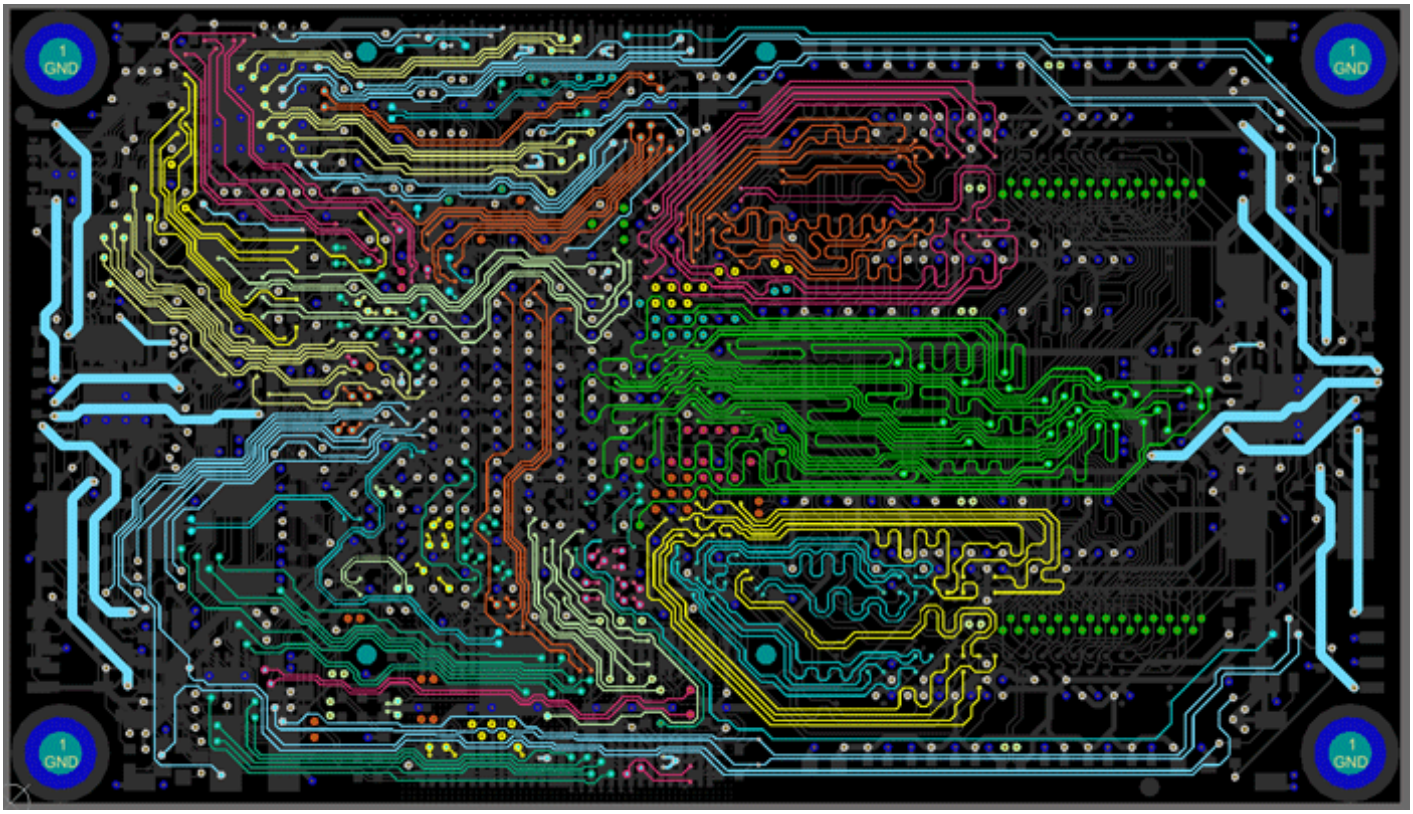

Printed Circuit Board Design Services Asia Pacific Circuits Co

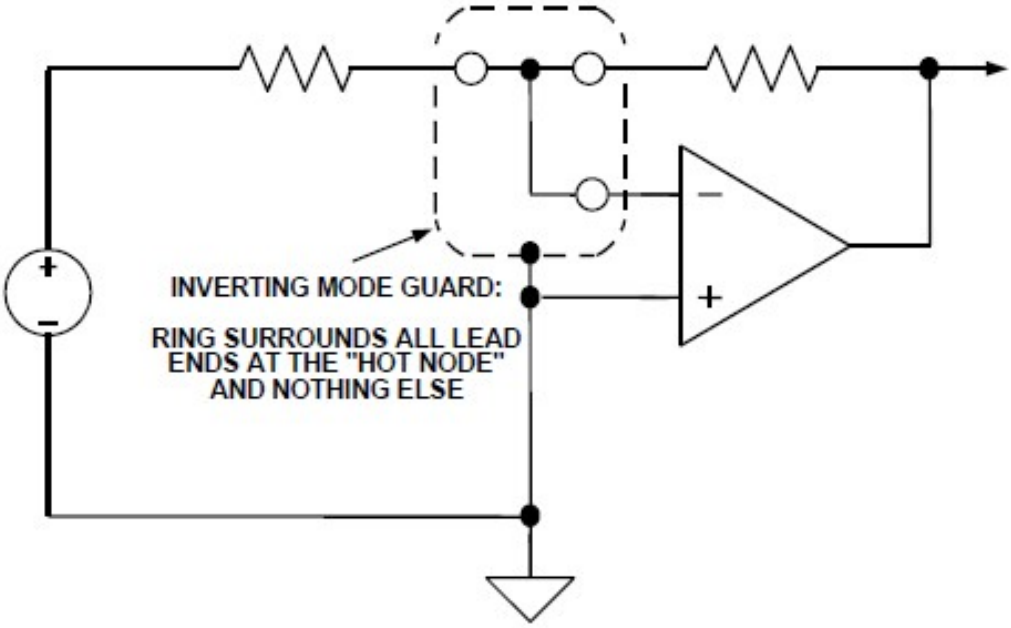

Figure 12.13: *Inverting Mode Guard Encloses All Op Amp Inverting Input Connections Within a Grounded Guard Ring*

Printed Circuit Board Pcb Design Issues Engineering Technical

Http Www Pcbtvi Com Media En Other Electronica Femtoammeter Design Module For Charged Particle Detection Gustavo Castro Pdf

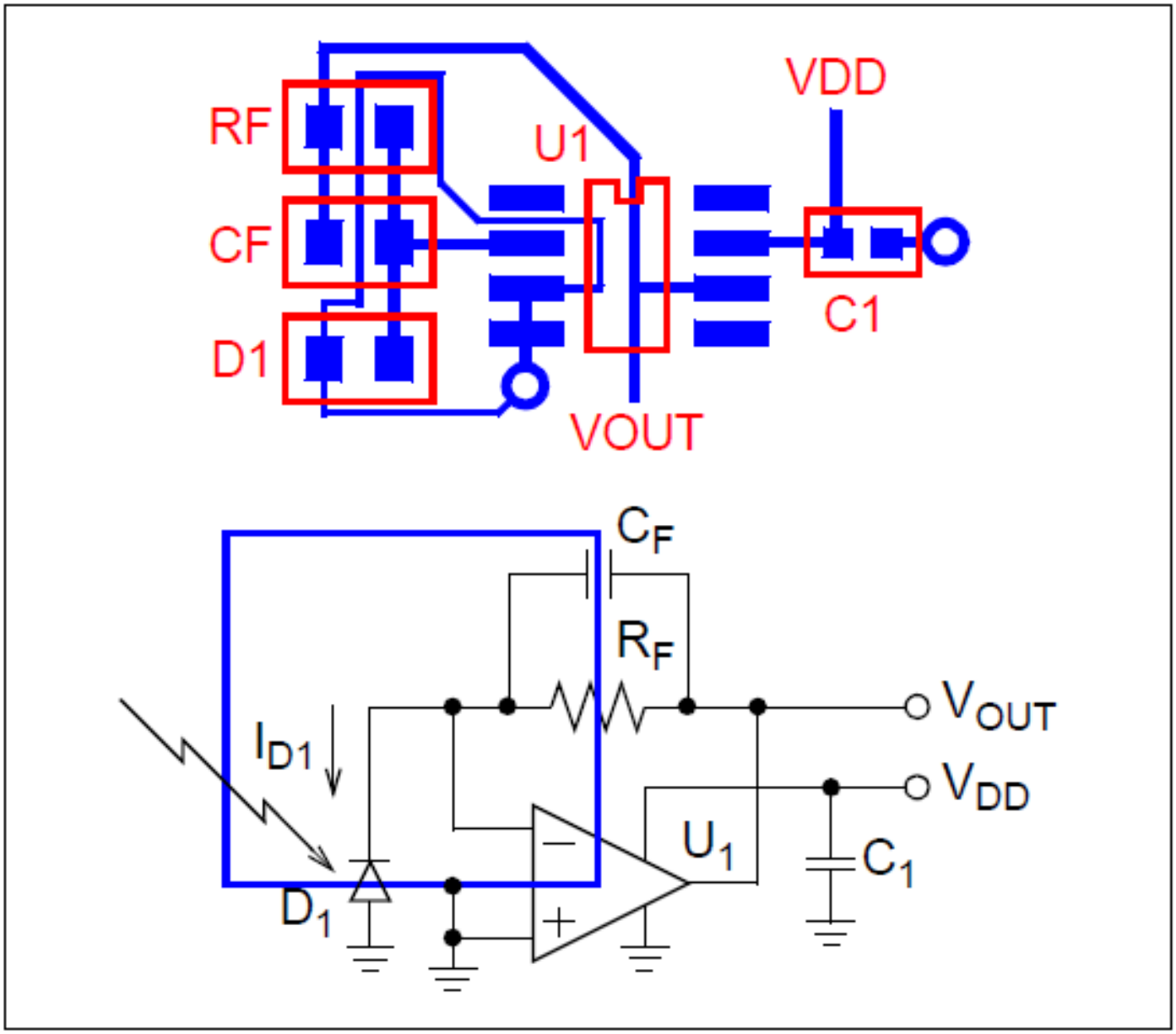

Leakage Currents Developer Help

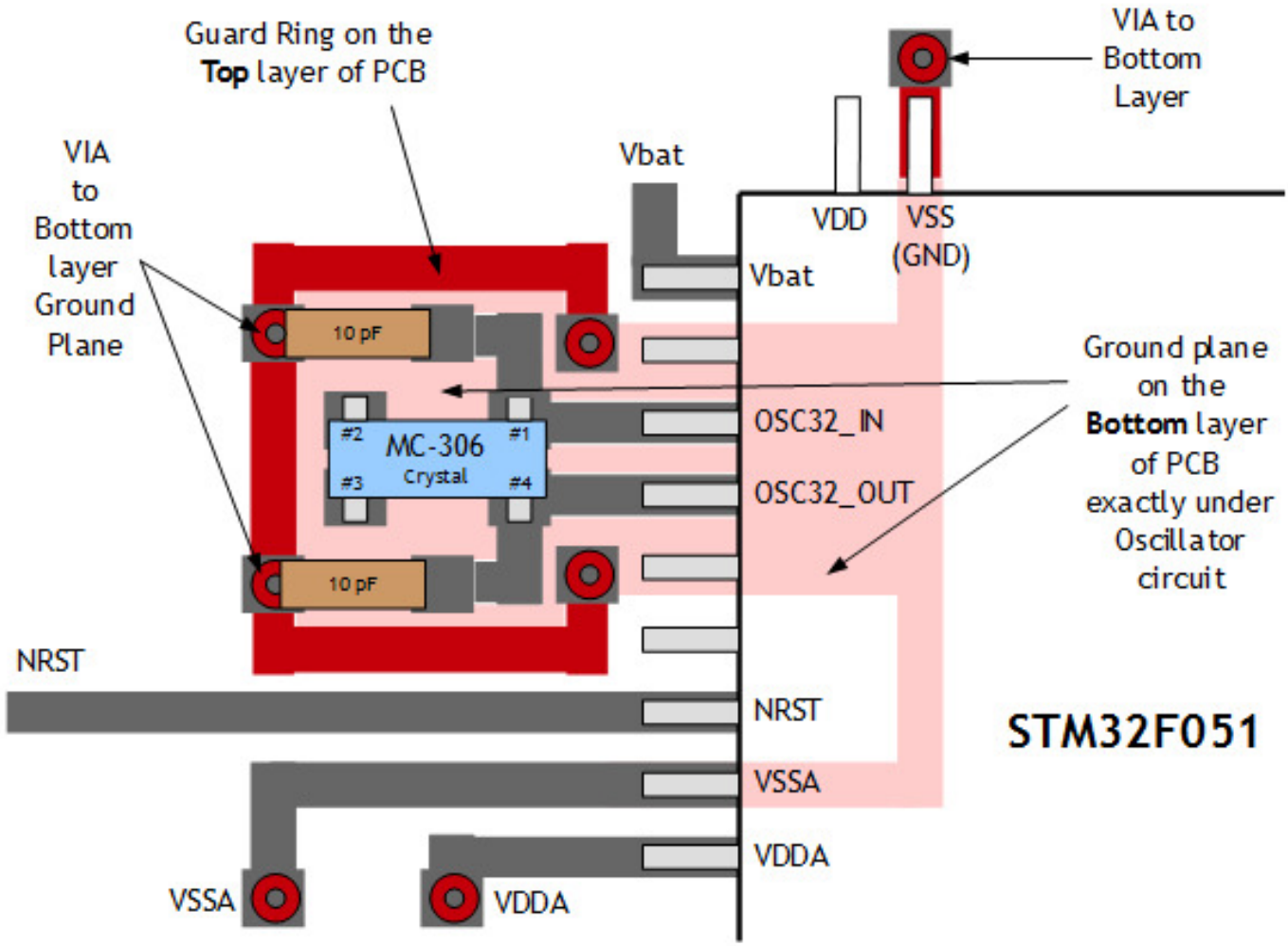

Lse Crystal Fail To Start

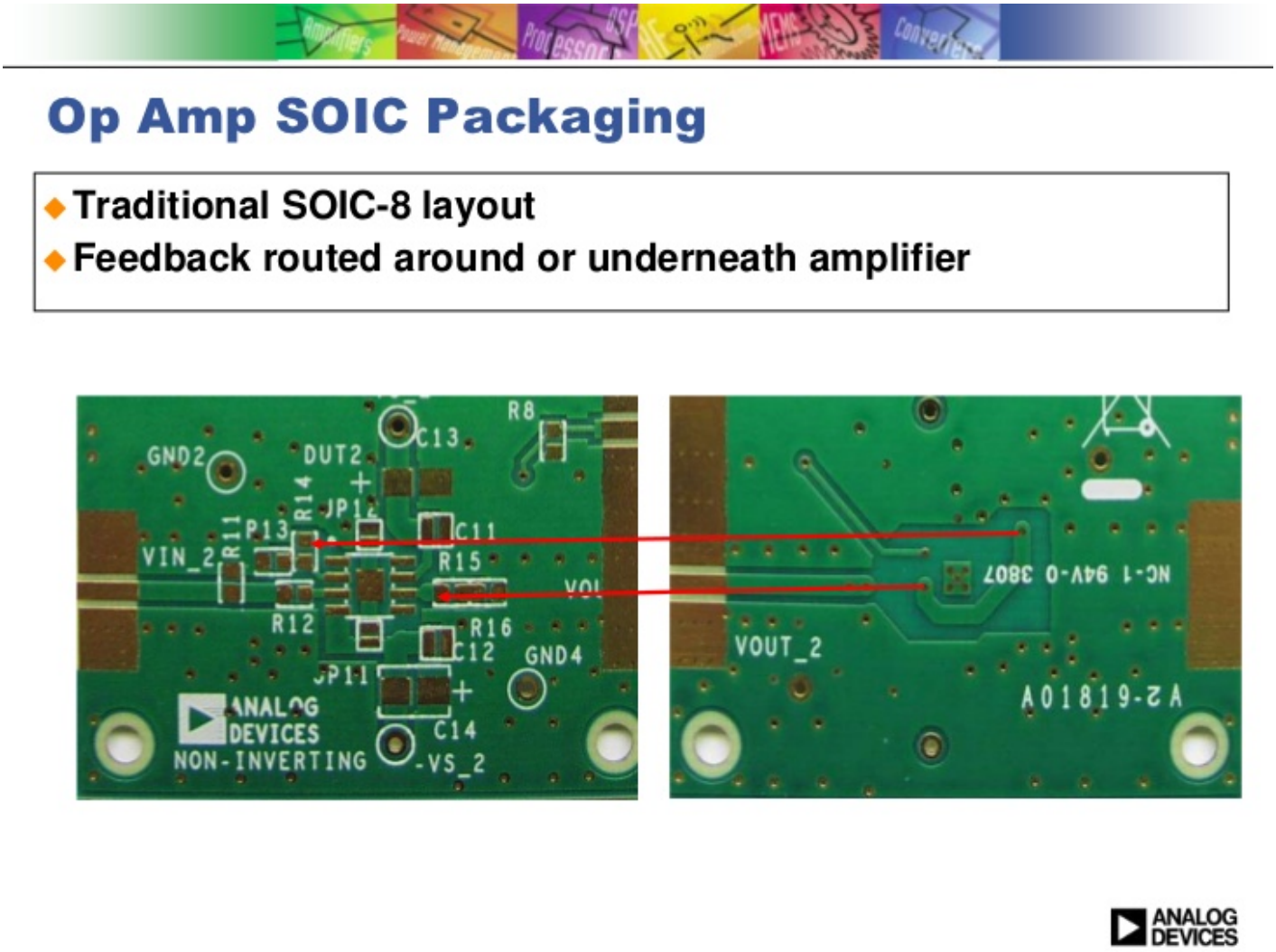

Pcb Layout Fundamentals

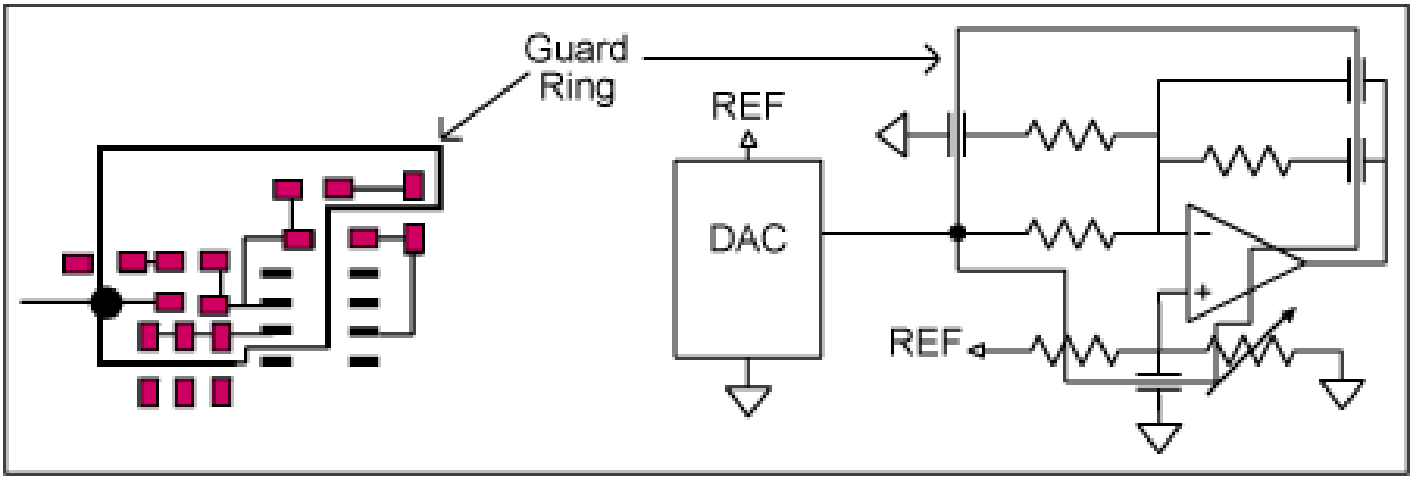

Compact Dwdm Laser Temperature Control With The Max8521

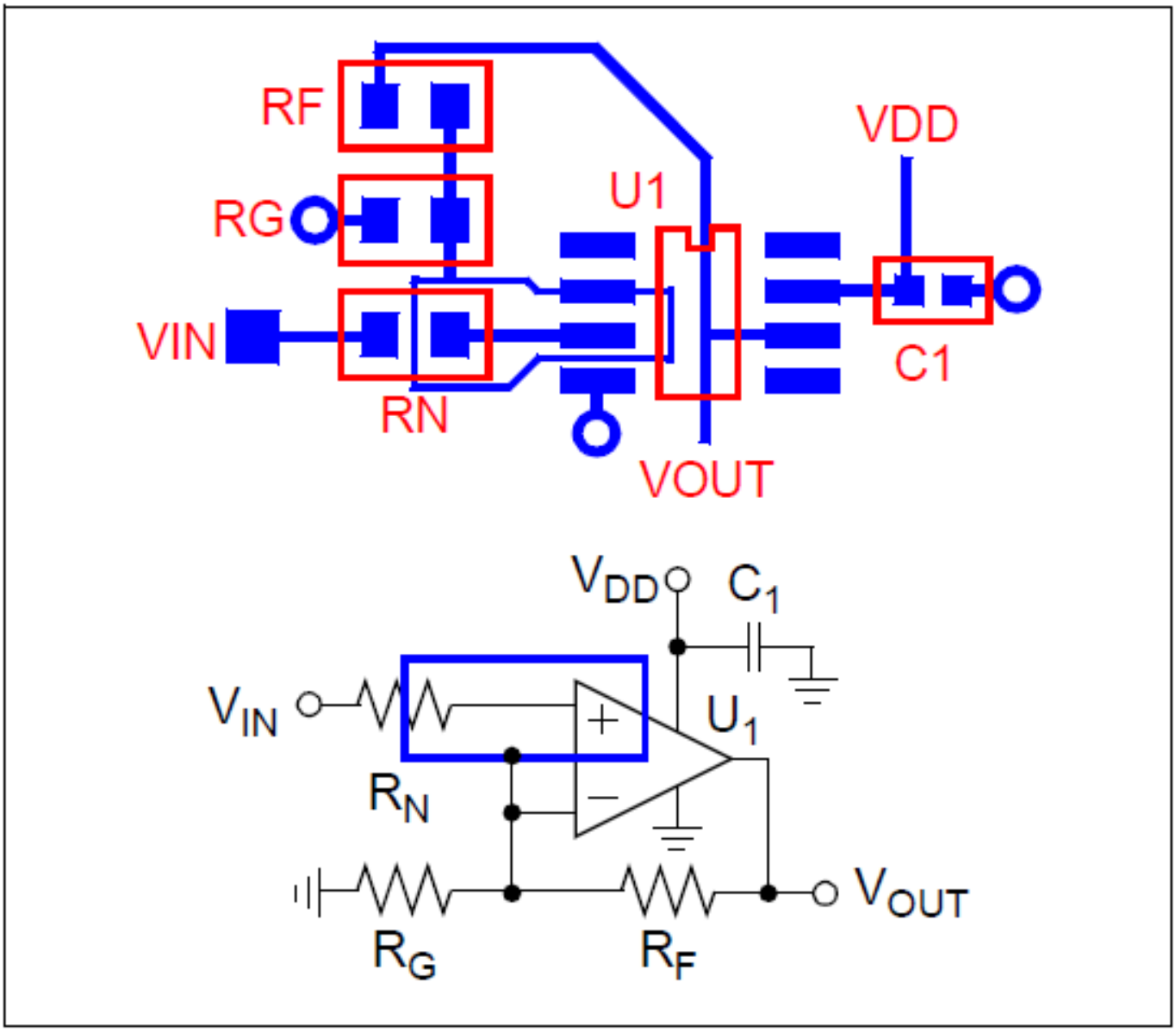

Leakage Currents Developer Help

Http Ww1 Microchip Com Downloads Cn Appnotes Cn540604 Pdf

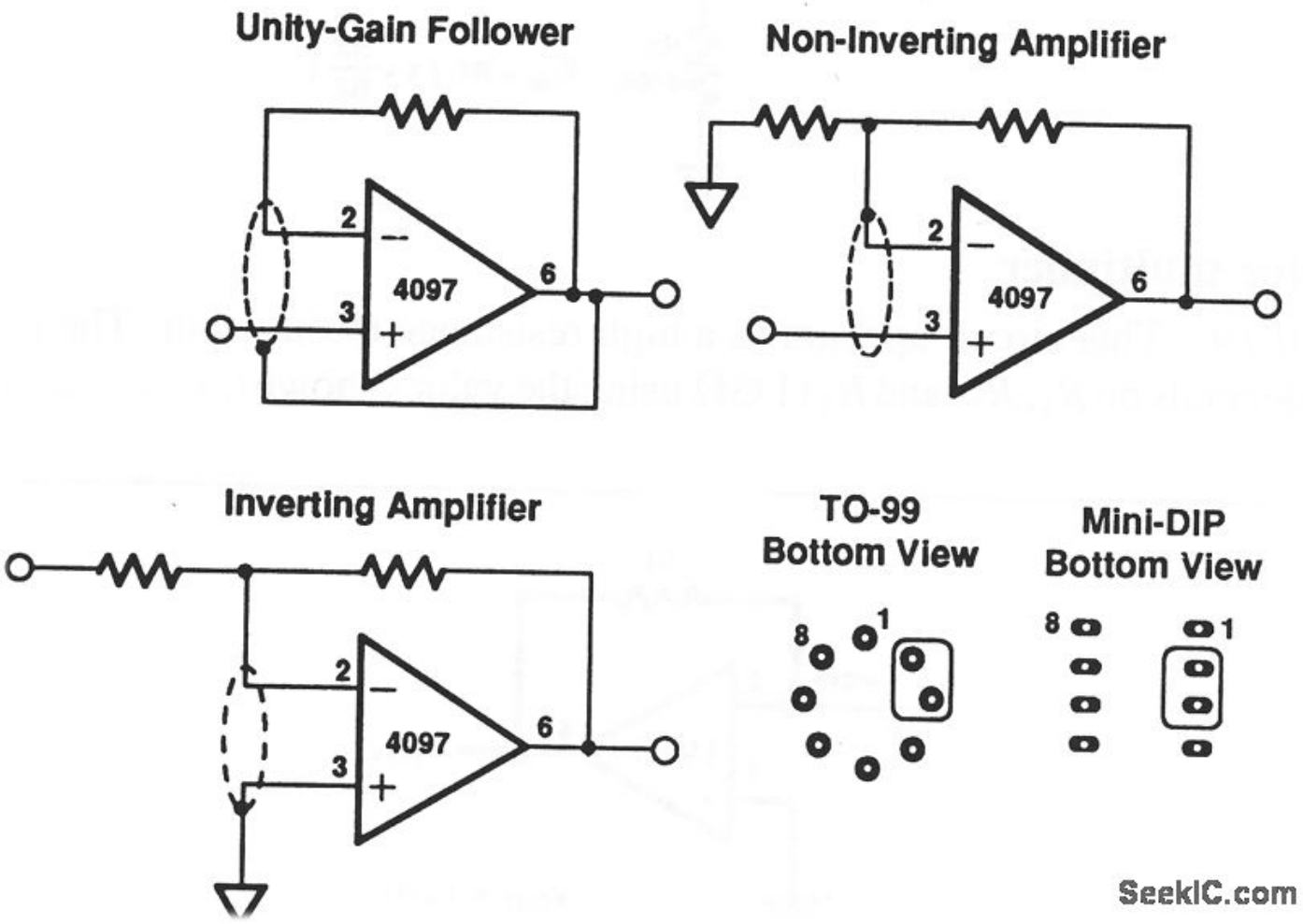

Opa659 Driven Guard Amplifiers Forum Amplifiers Ti E2e

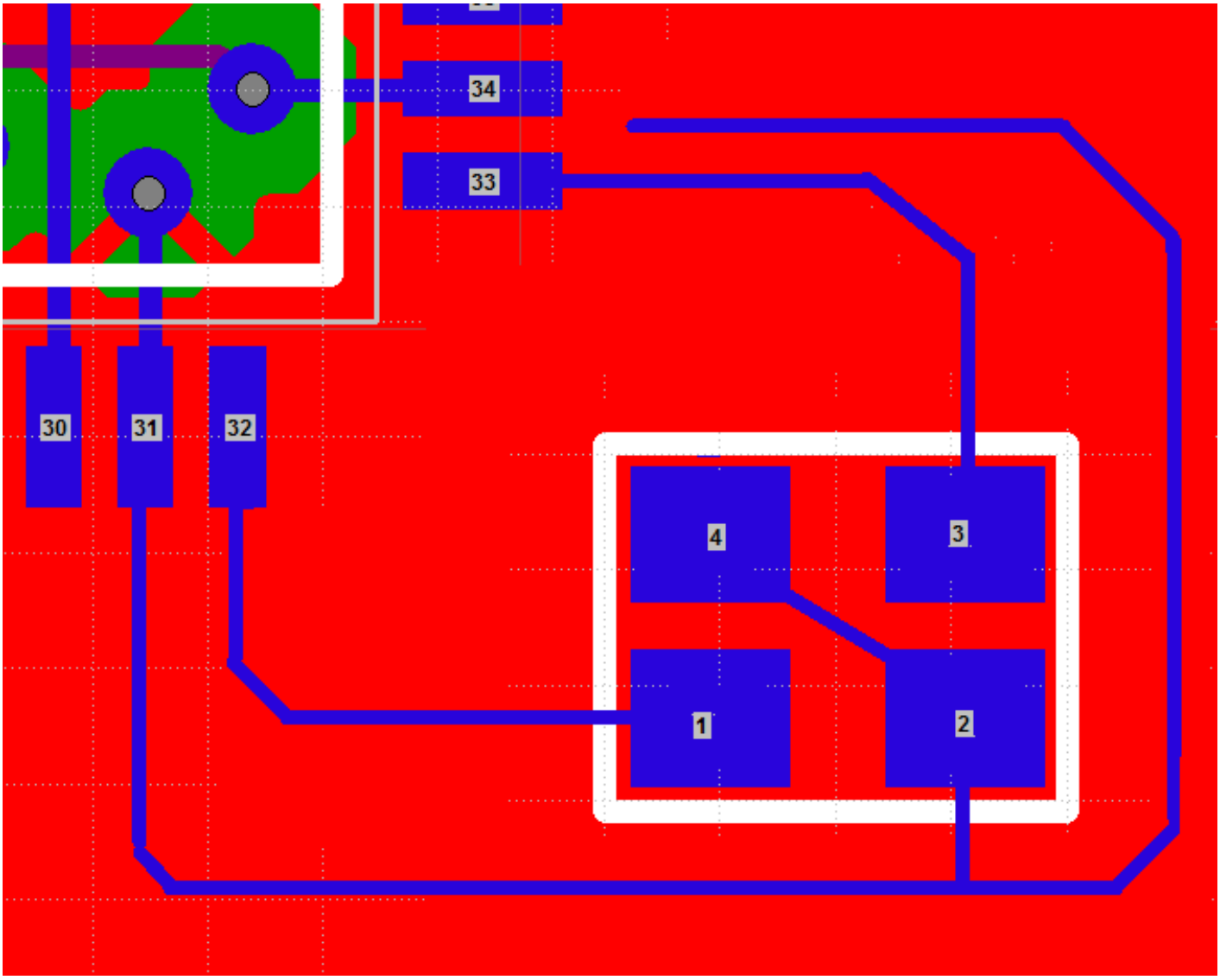

Pjrc Teensy Forum

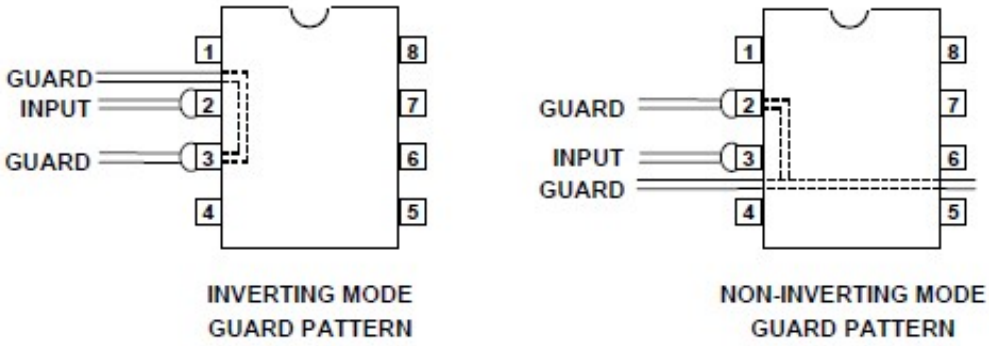

Figure 12.15: *PCB Guard Patterns for Inverting and Noninverting Mode Op Amps Using Eight Pin MINI-DIP (N) Package*

Printed Circuit Board Pcb Design Issues Engineering Technical

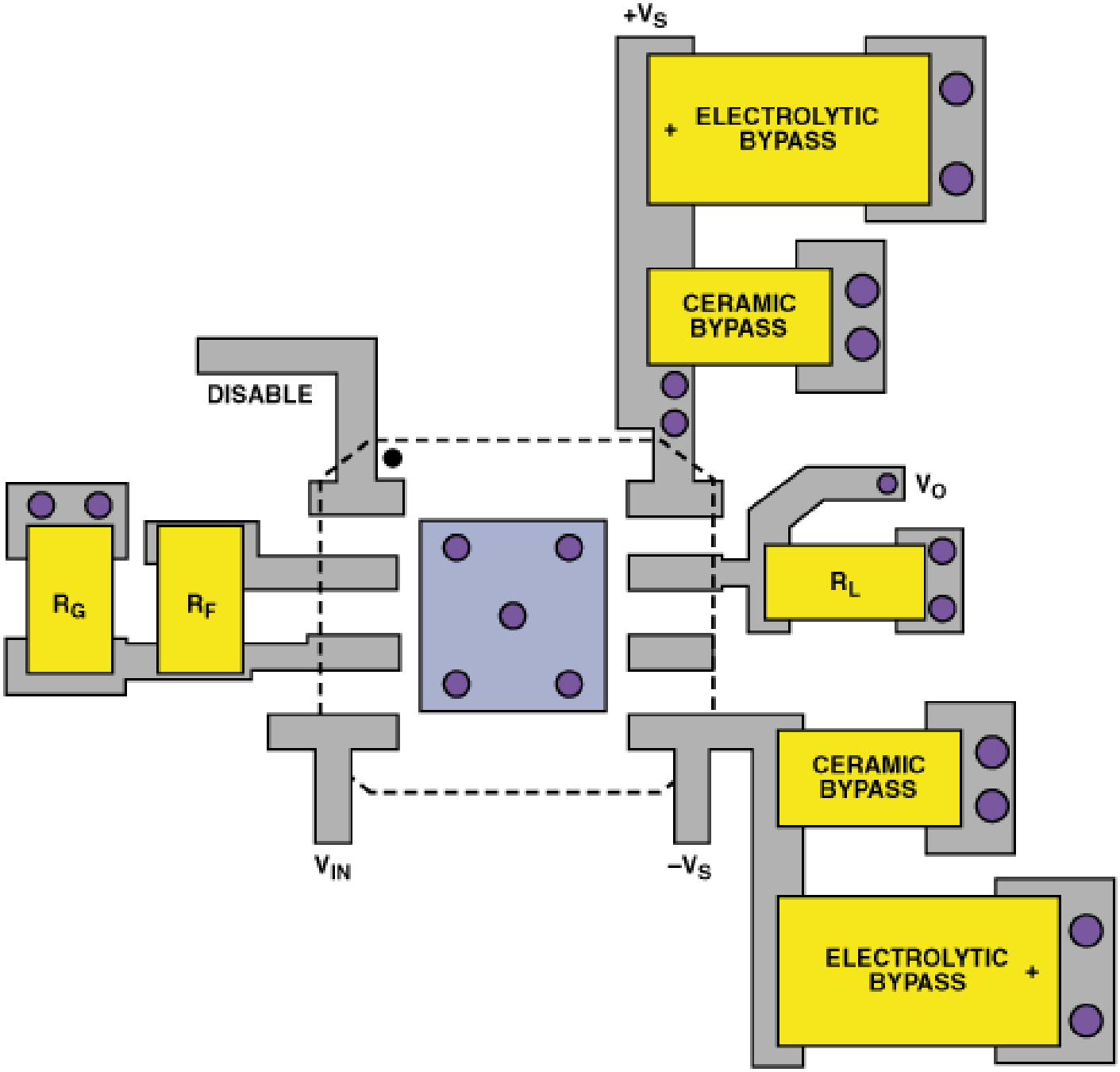

A Practical Guide To High Speed Printed Circuit Board Layout

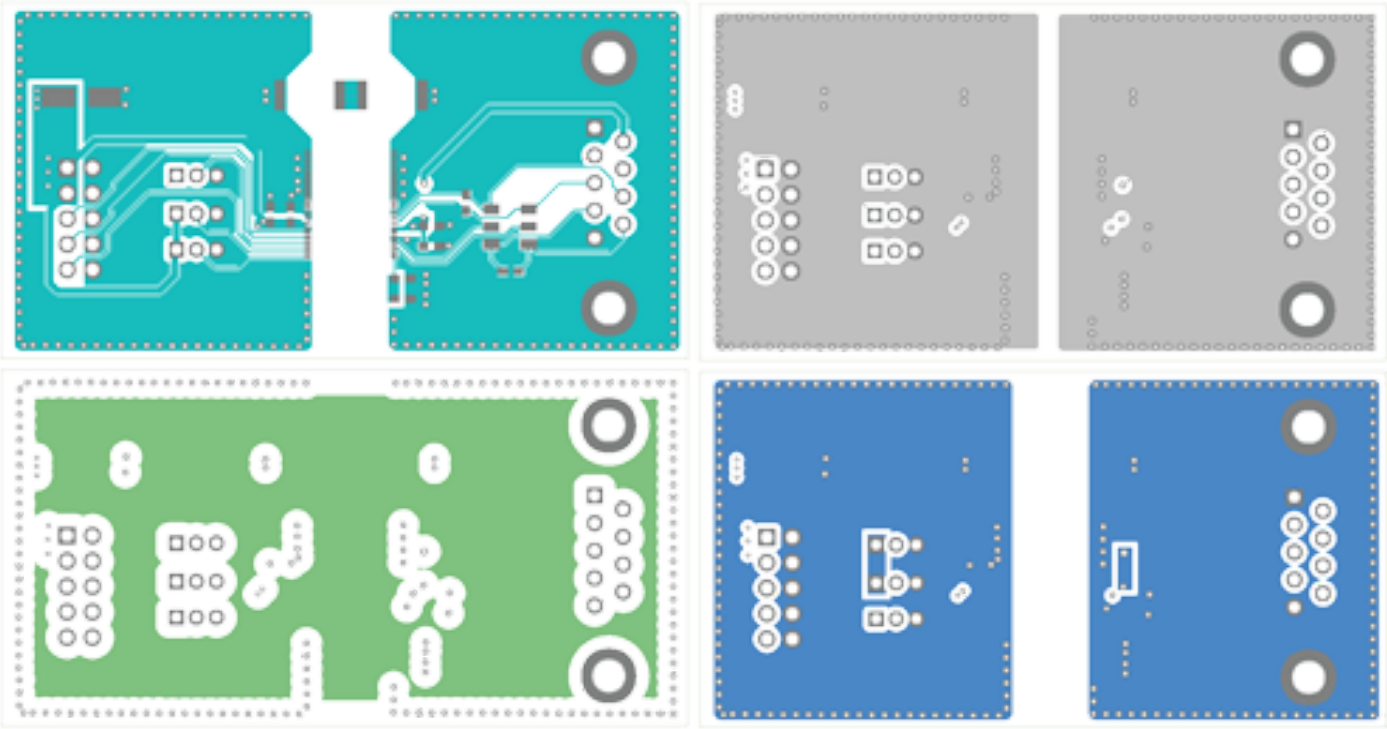

How To Design And Layout An Emi Optimized Pcb For The Maxm22511

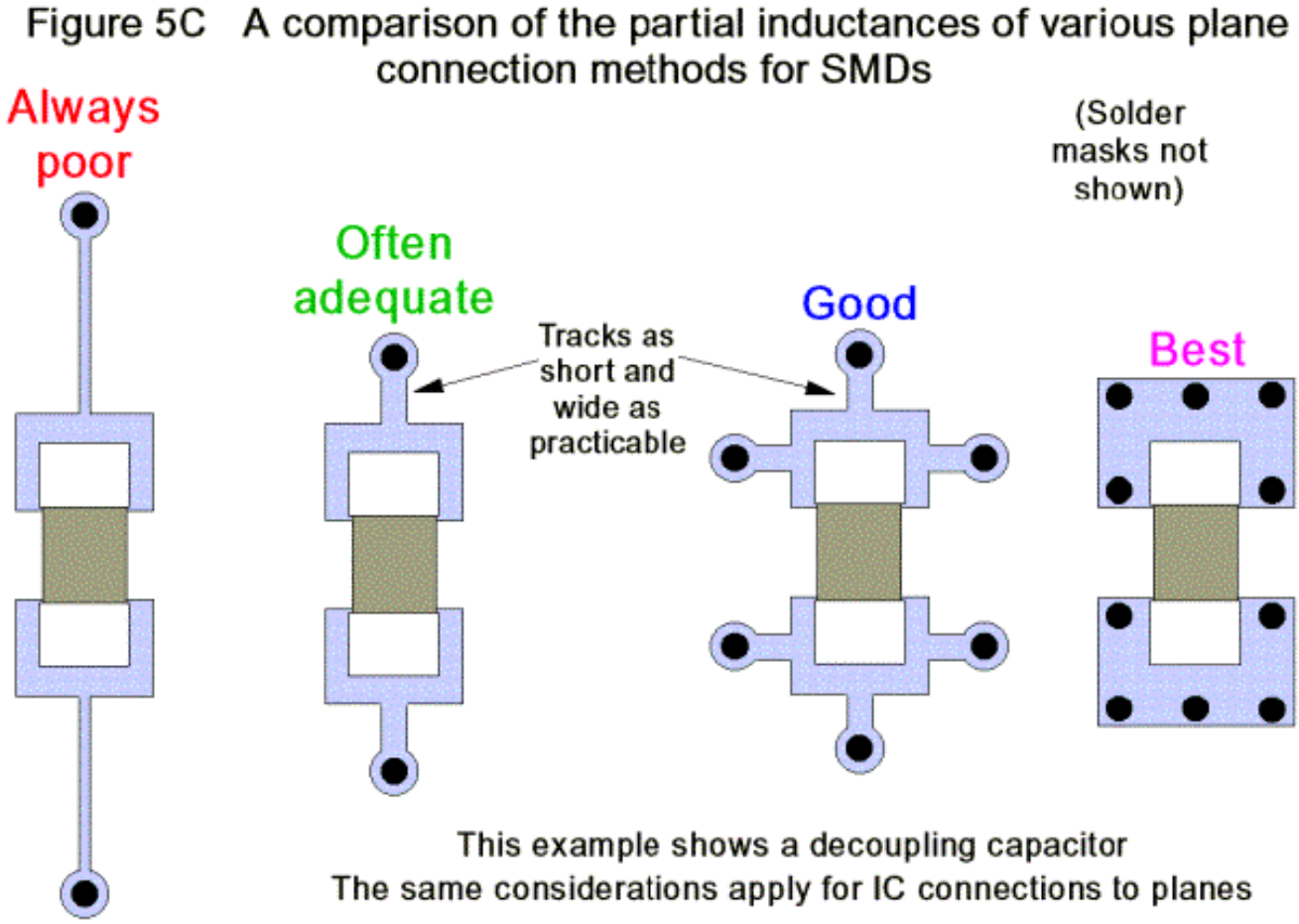

Pcb Design Techniques For Lowest Cost Emc Compliance

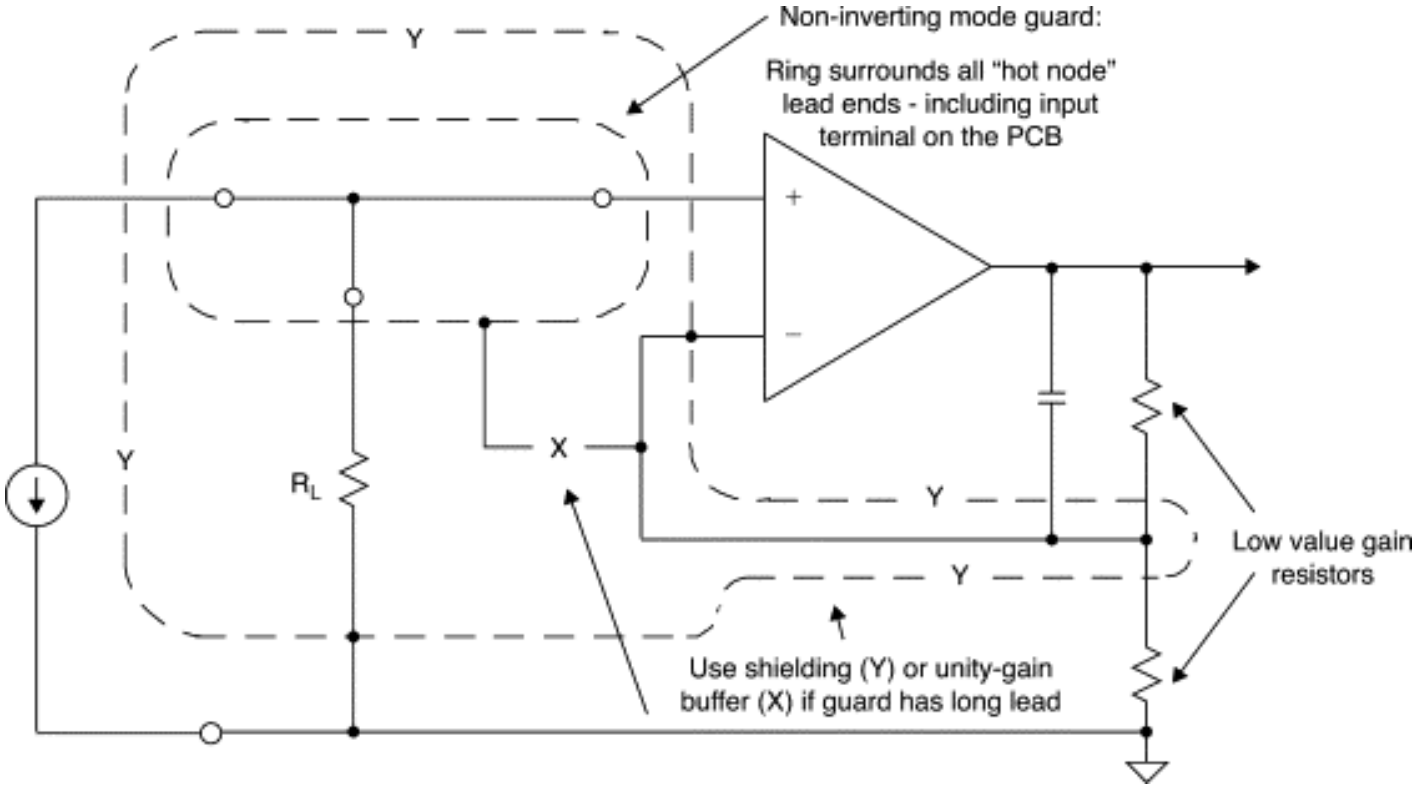

Leakage Resistance An Overview Sciencedirect Topics

Https Www Nxp Com Docs En Application Note An4643 Pdf

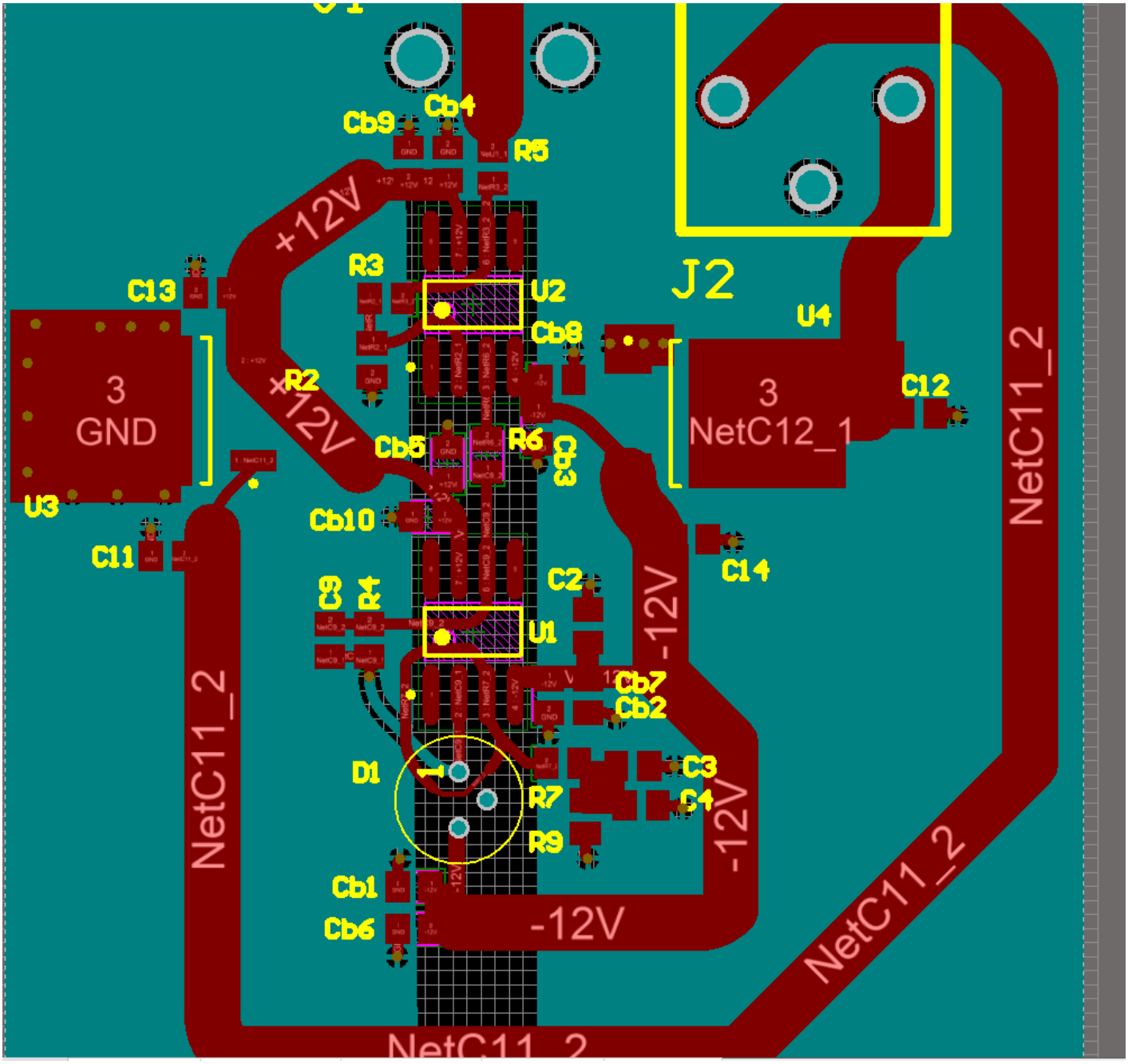

15mhz Photodiode Pcb Feedback Requested Electrical Engineering

Https Www Dialog Semiconductor Com Sites Default Files An B 018 Da14580 Checklist For Schematic And Pcb Layout V1 2 Pdf

Https Www Dialog Semiconductor Com Sites Default Files An B 018 Da14580 Checklist For

Schematic And Pcb Layout V1 2 Pdf

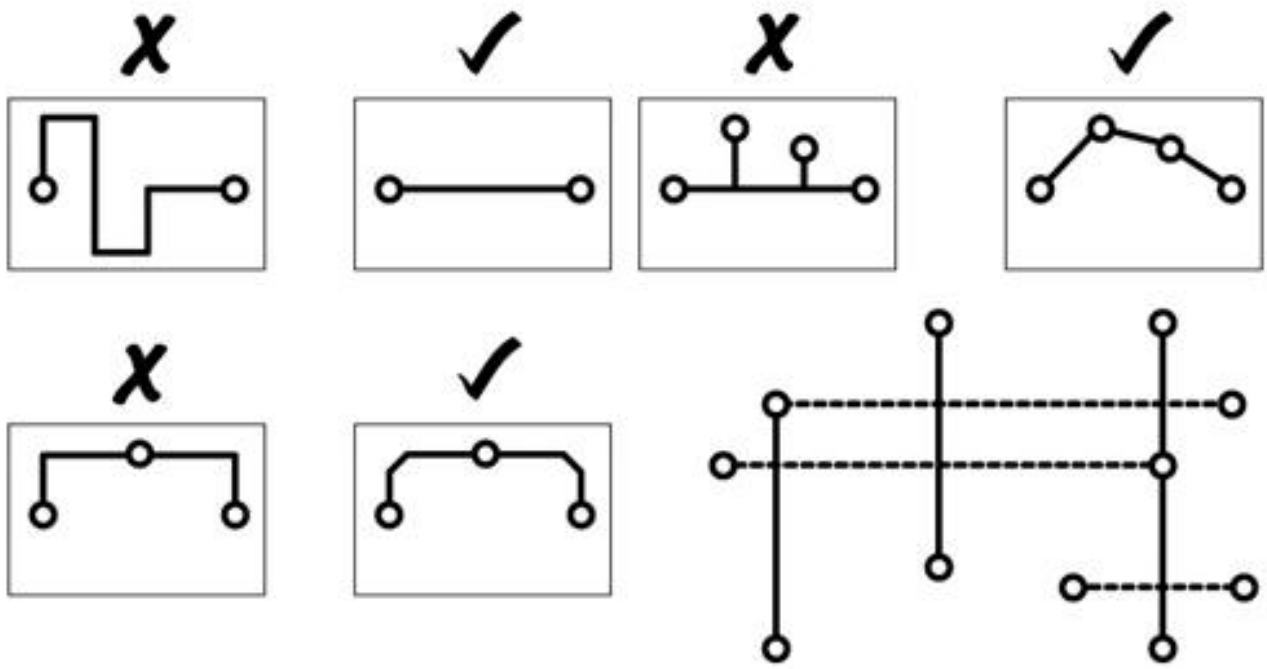

Basics On Designing For Emc Compliance Interference Technology

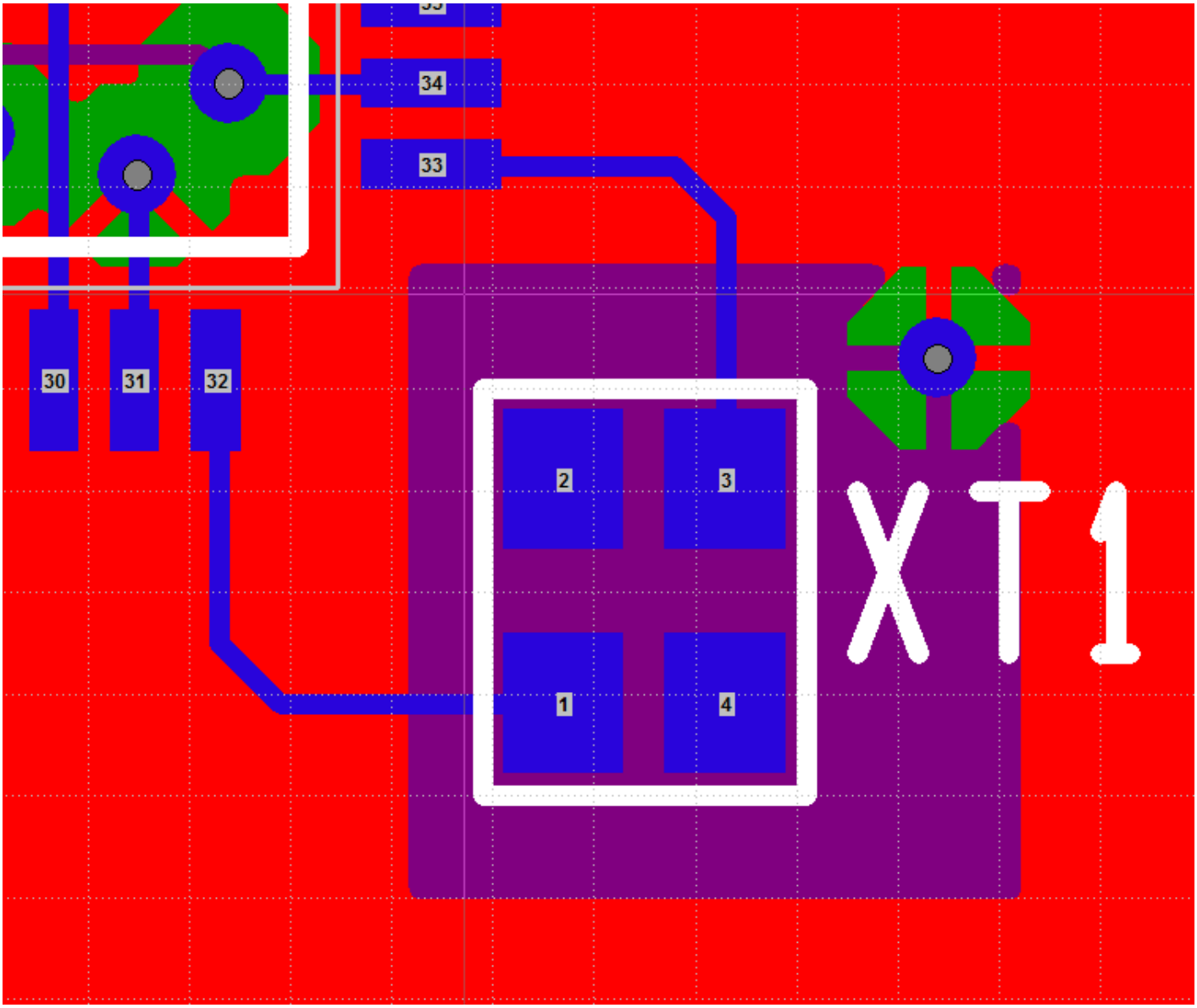

Pjrc Teensy Forum

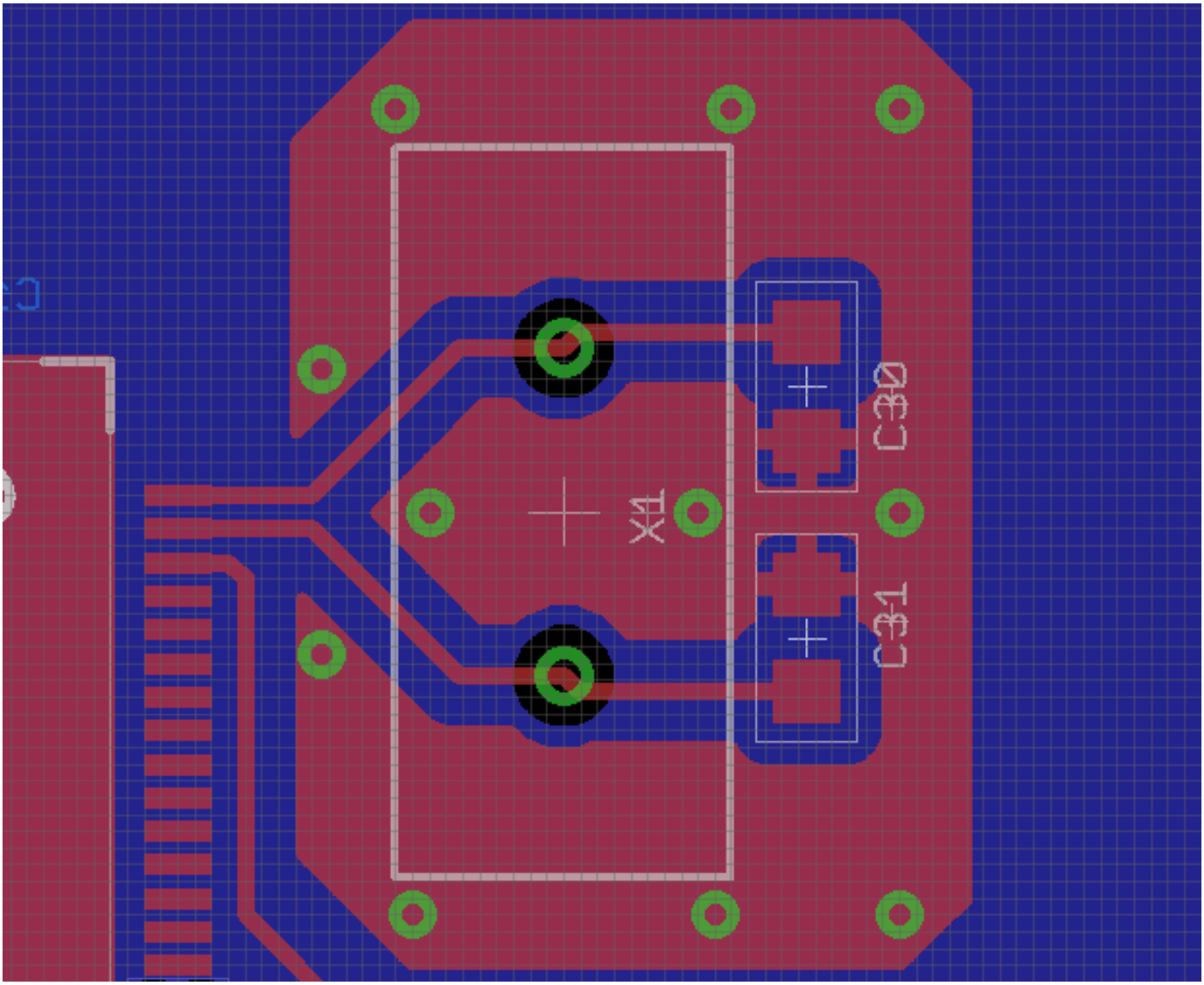

Competing Pcb Crystal Layout Recommendations Electrical

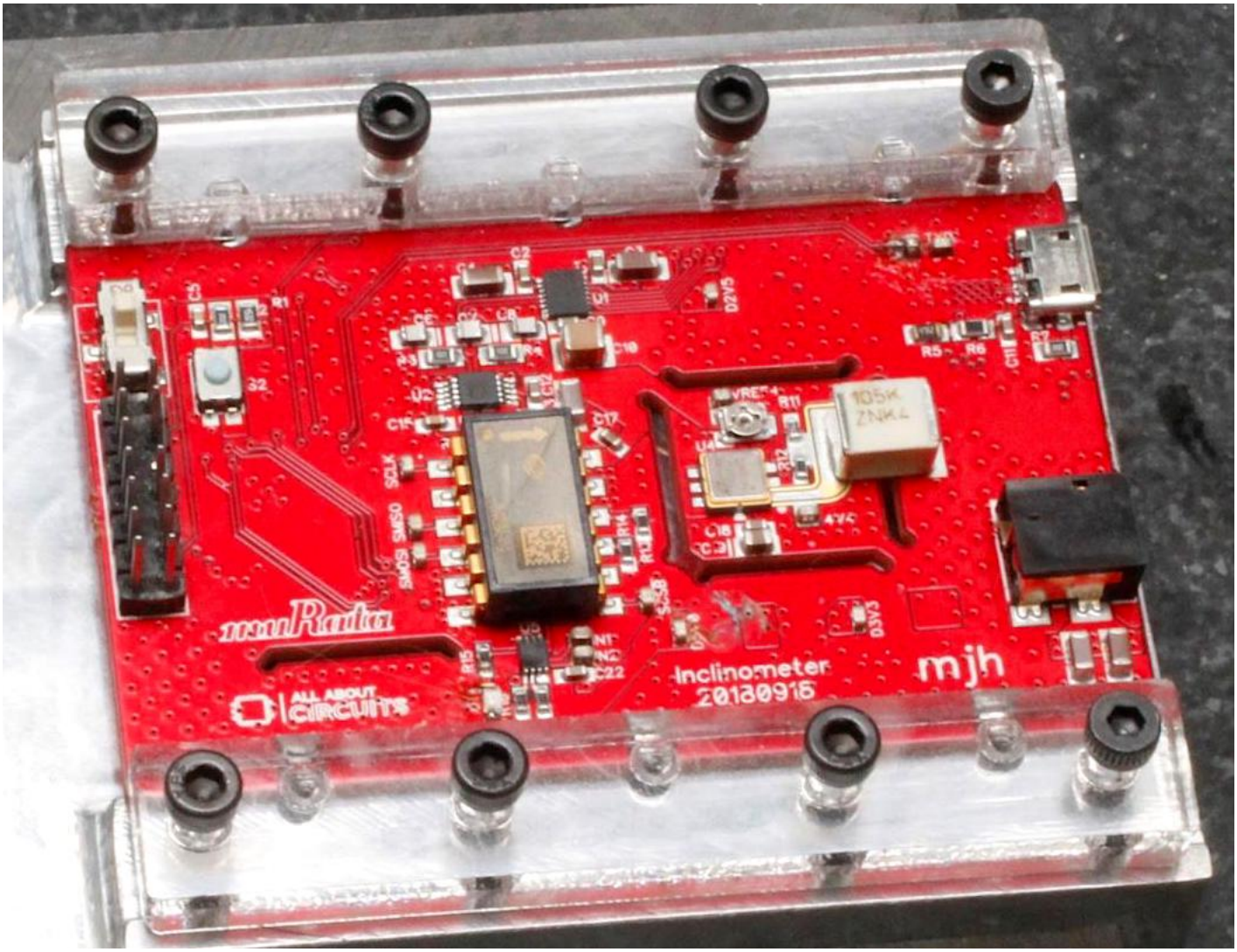

How To Turn A Schematic Into A Pcb Layout Pcb Design For A Custom

When And Why To Use A Pcb Guard Ring Tempo

Http Www X2y Com Filters Techday09kr Hpa Track2 1 Precision Analog Designs Demand Goodpcblayouts 20 Johnwu Pdf

Figure 2: Via Stitching .....

Figure 3: Via Shielding .....

Figure 4: Capacitor Series Equivalent Circuit.....

Figure 5: Decoupling Capacitor Placement .....

Figure 6: Tracks not at right angle .....

Figure 7: Microstrip line Cross-section.....

Figure 8: Stripline Cross-section.....

Figure 9: STM32F4-Discovery .....

Figure 10: LQFP 100 Footprints .....

Figure 11: STM32F407 V1 PCB Layout .....

Figure 12: STM32F407 V1 .....

Figure 13: Microcontroller to SPI Slave Isolated Interface .....

Figure 14: Jumper Setting Master, Slow .....

Figure 15: Jumper Setting SPI Mode .....

Figure 16: Via shielding around the isoSPI circuit .....

A COPYRIGHT ACCORDING TO COLLEGE OF ARTS, SCIENCE AND TECHNOLOGY GUIDELINES

Guard Ring With Via Stitching Download Scientific Diagram

Questions About External Oscillators For Stm32 Microcontrollers

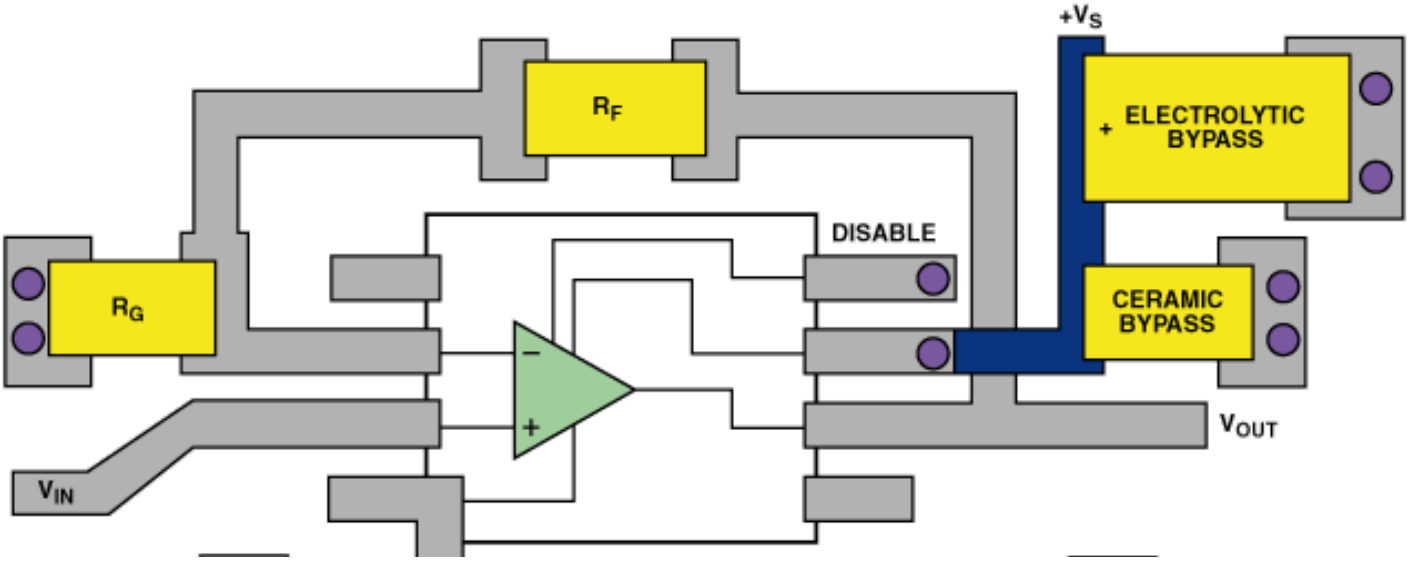

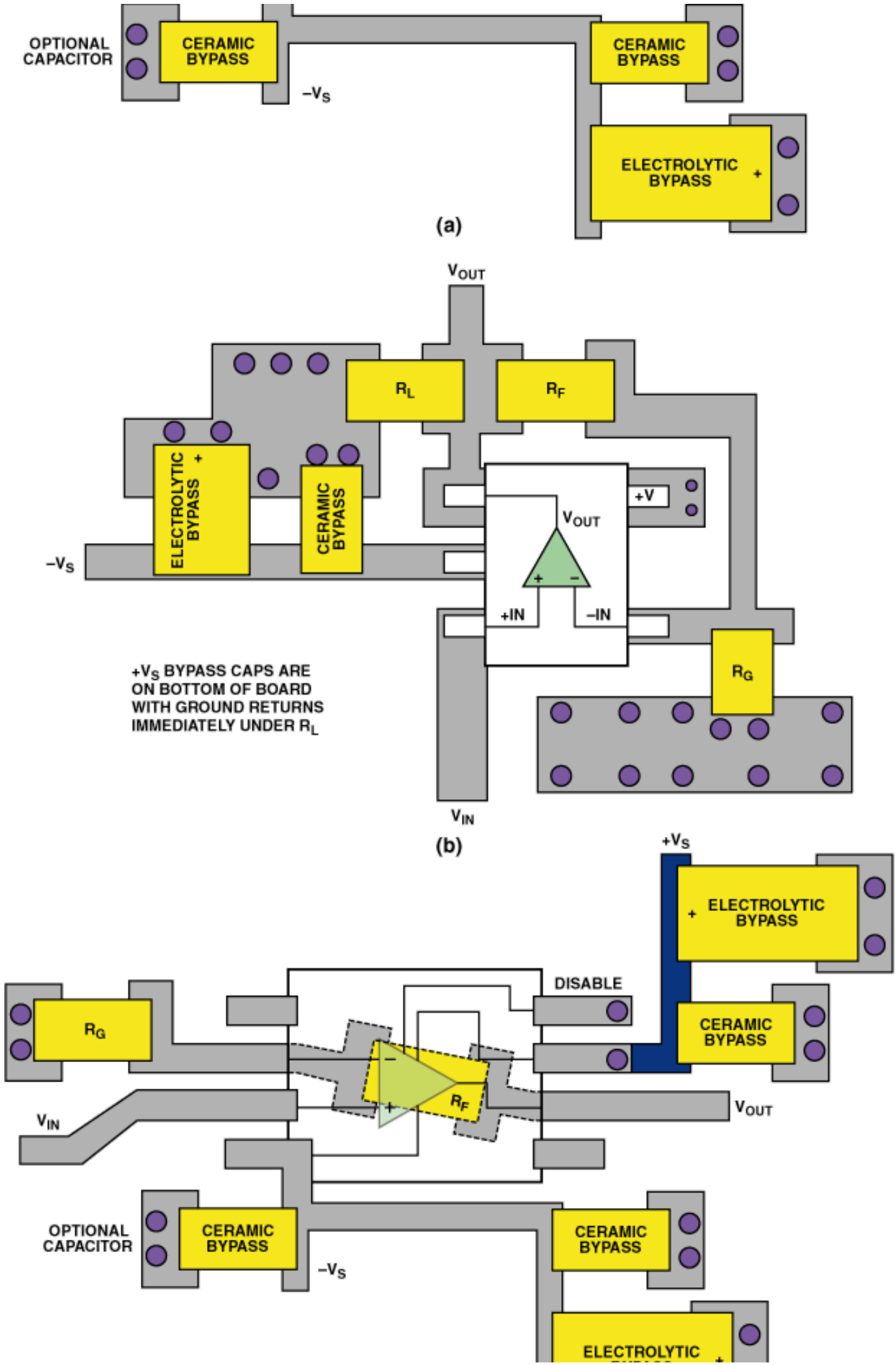
OPTIONAL CAPACITOR
CERAMIC BYPASS
CERAMIC BYPASS
–VS
ELECTROLYTIC BYPASS +
(a)
VOUT
RL
RF
ELECTROLYTIC BYPASS +
CERAMIC BYPASS
+V
VOUT
–VS
+IN
–IN
RG
+VS BYPASS CAPS ARE ON BOTTOM OF BOARD WITH GROUND RETURNS IMMEDIATELY UNDER RL
VIN
(b)
+VS
ELECTROLYTIC BYPASS +
DISABLE
RG
CERAMIC BYPASS
RF
VIN
VOUT
OPTIONAL CAPACITOR
CERAMIC BYPASS
CERAMIC BYPASS
–VS
ELECTROLYTIC

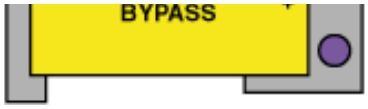

(c)

A Practical Guide To High Speed Printed Circuit Board Layout

Https Www Infineon Com Dgdl Infineon Ap2402635 General Pcb An V03 05 En Pdf Fileid 5546d46261ff5777016229f8523036f1

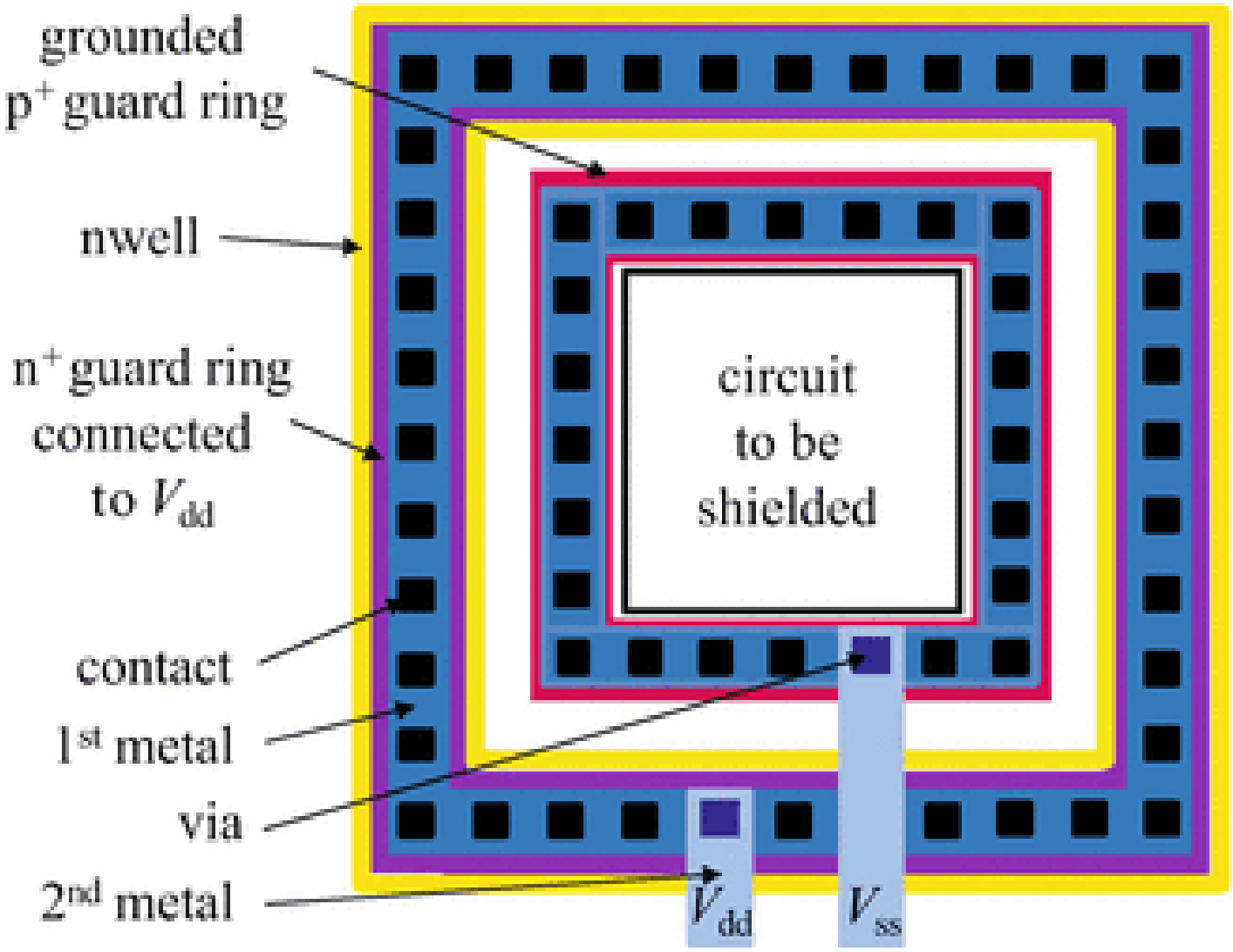

Robustness Of Nanometer Cmos Designs Signal Integrity

Crystal Oscillator Design Hoani Net

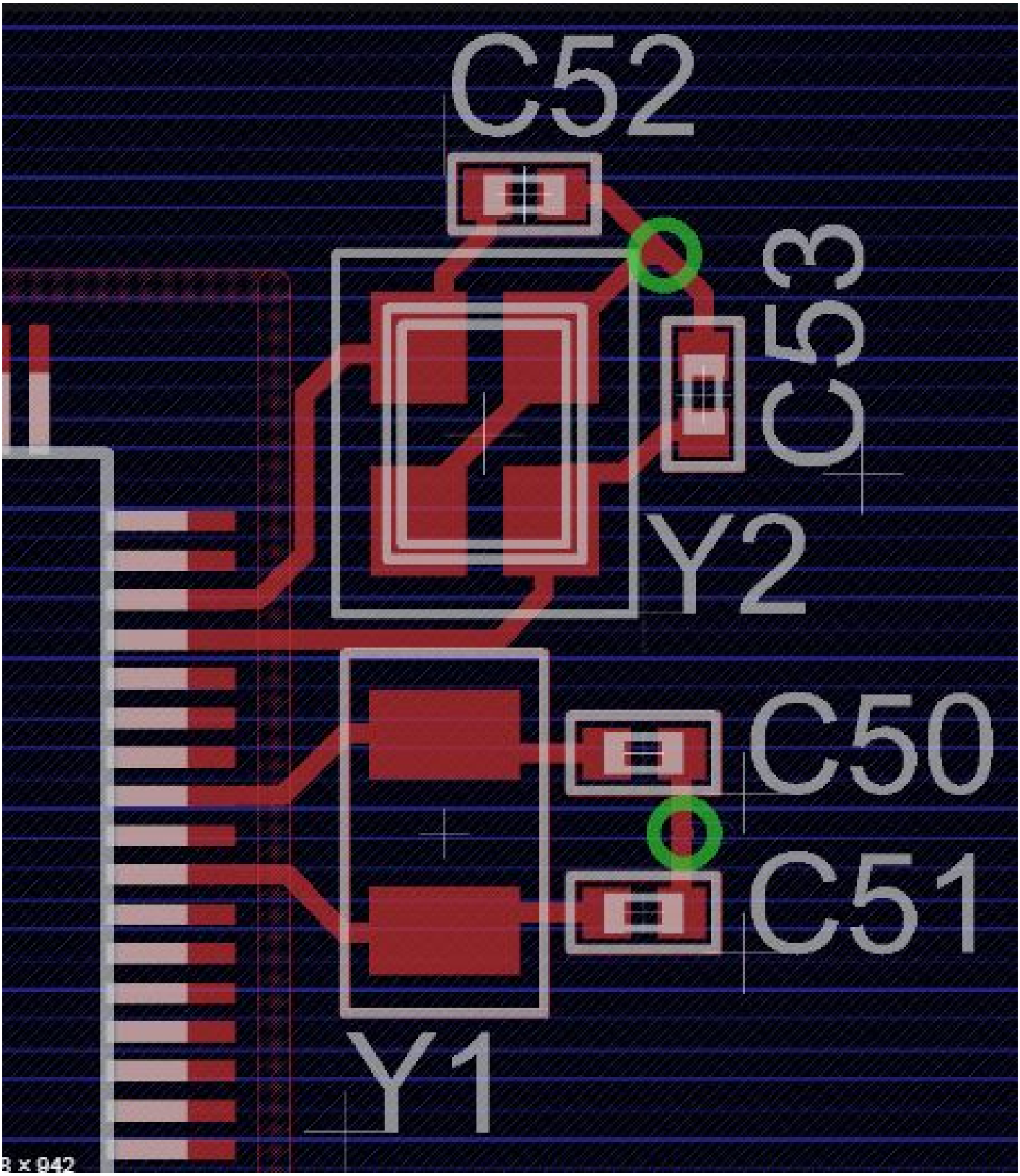

What Is Guidelines For The Crystal Placement Routing Pcbscientist

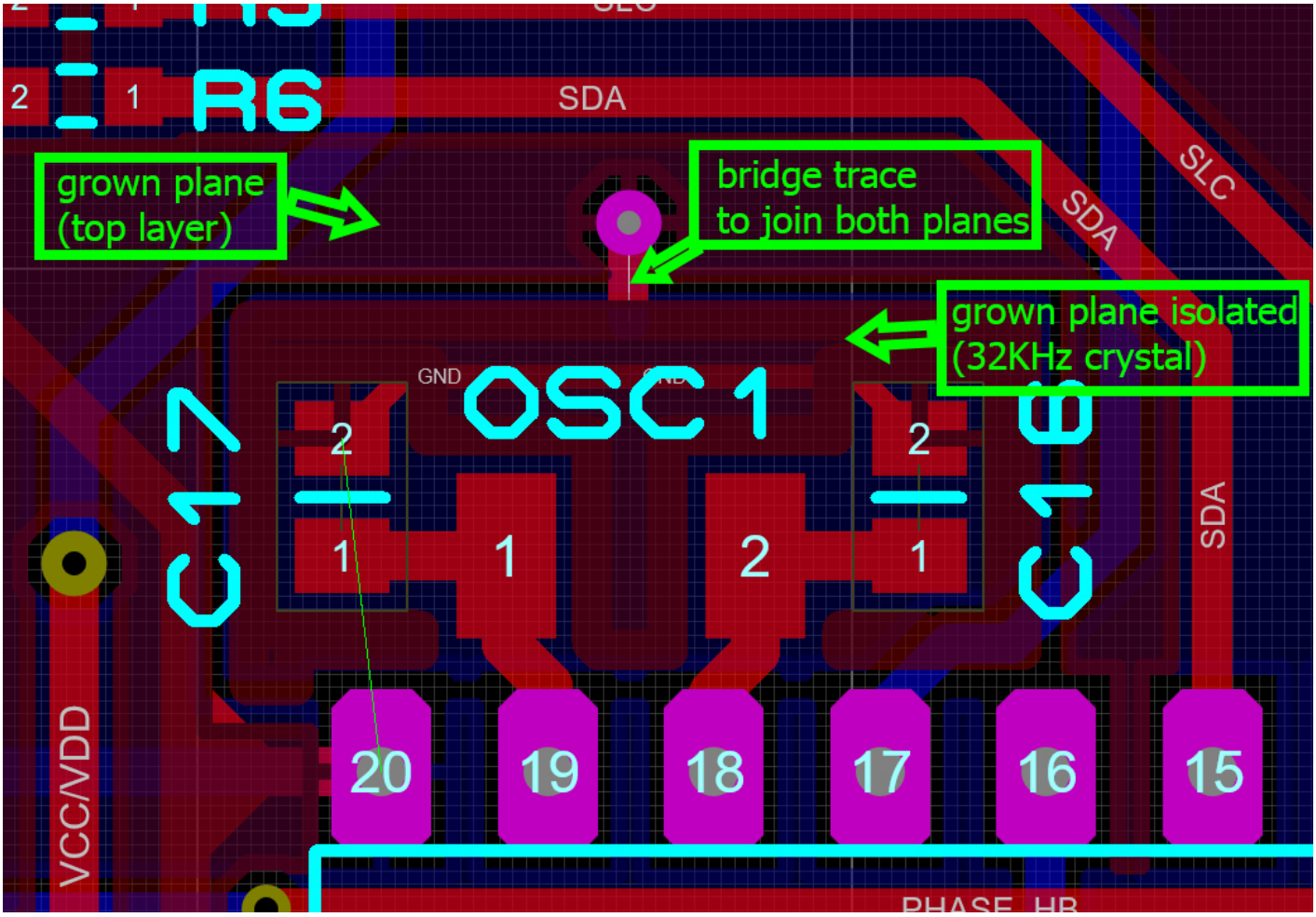

Resolved Pcb Design Around 32768hz Crystal Msp Low Power

Https Www Infineon Com Dgdl Infineon Ap2402635 General Pcb An V03 05 En Pdf Fileid

5546d46261ff5777016229f8523036f1

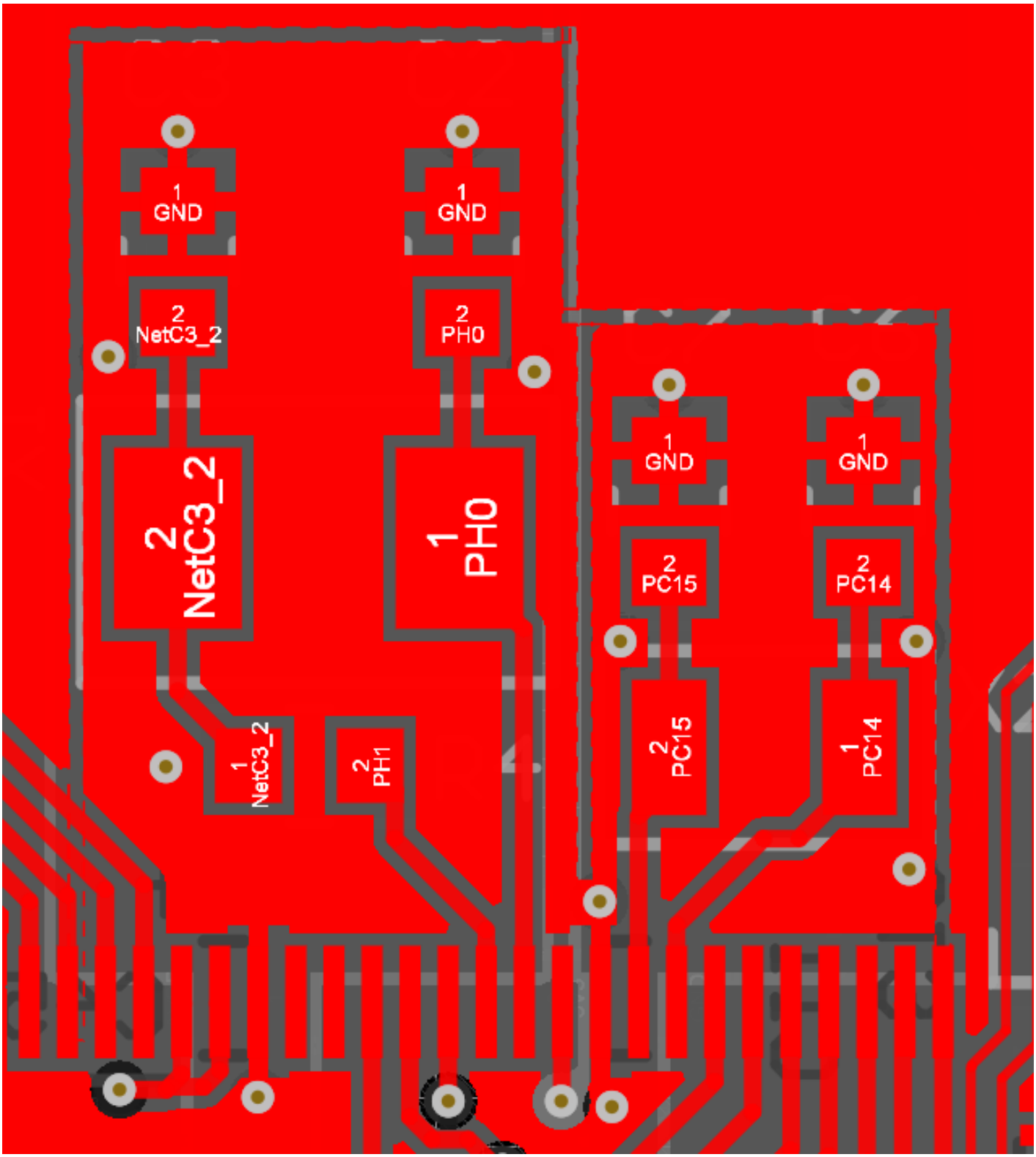

Questions About External Oscillators For Stm32 Microcontrollers

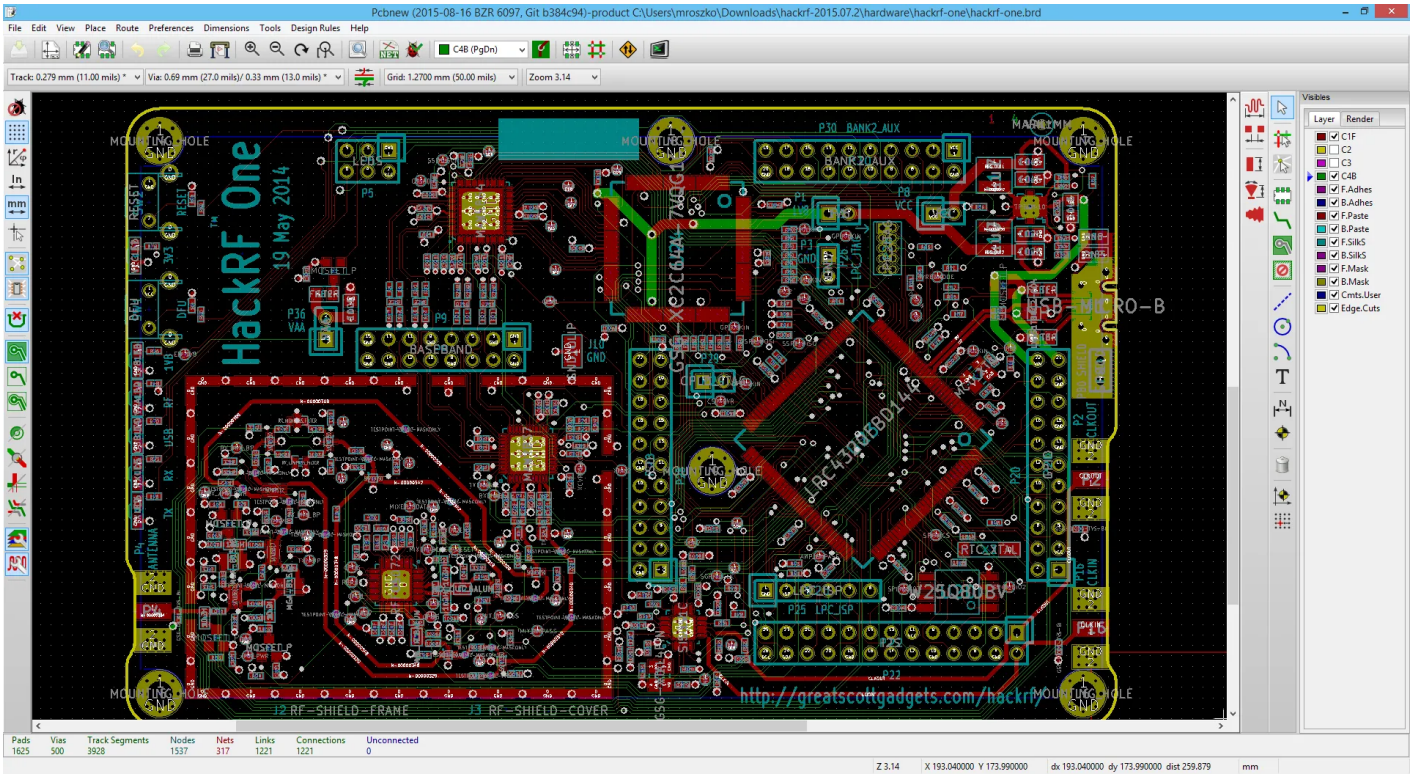

4 Steps To Review The Pcb Layout Techniex

Http Www X2y Com Filters Techday09kr Hpa Track2 1 Precision Analog Designs Demand Goodpcblayouts 20 Johnwu Pdf

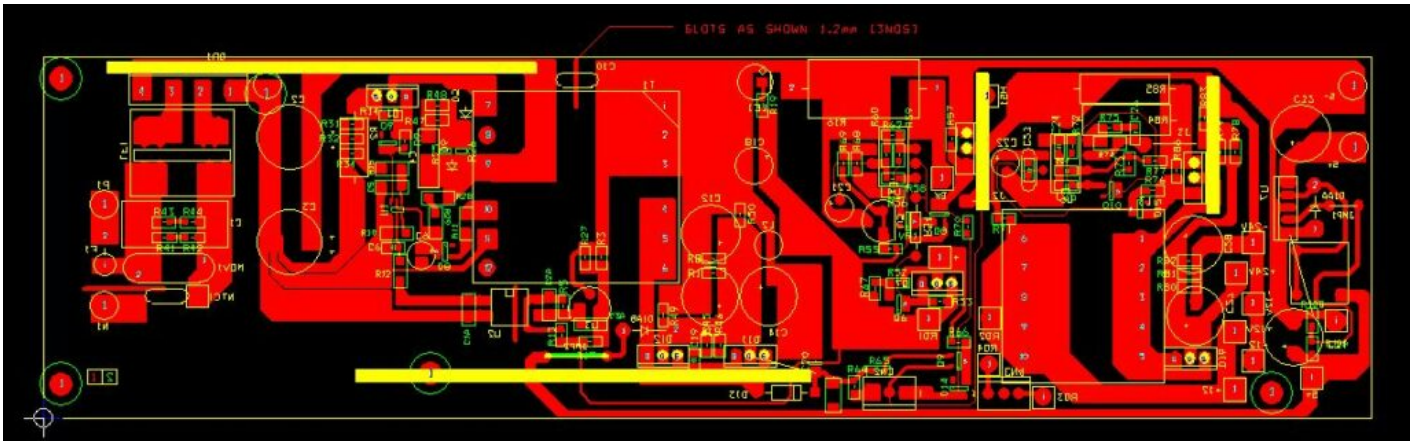

What Is Guideline Of Smps Pcb Design Pcbscientist

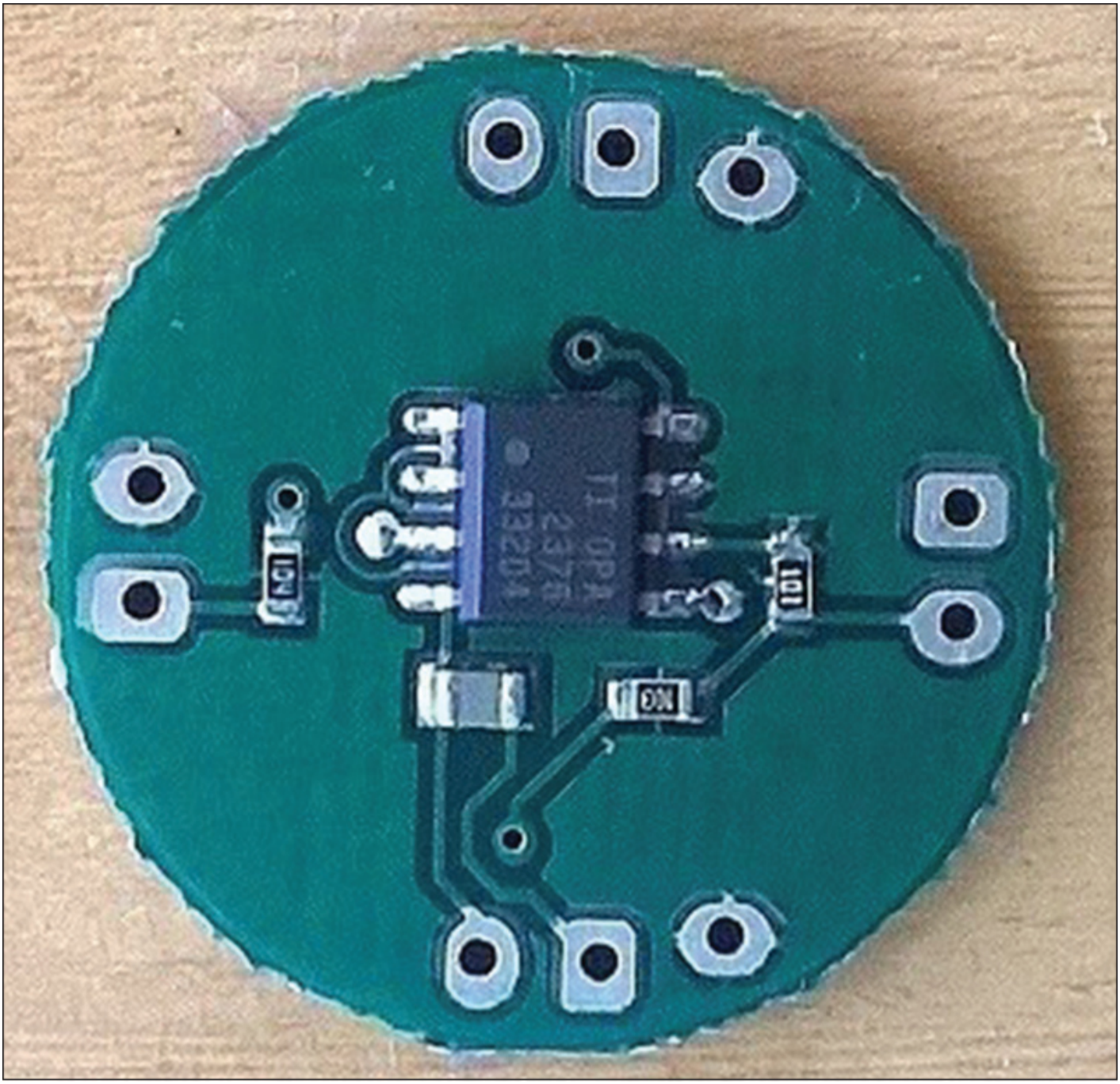

View Image

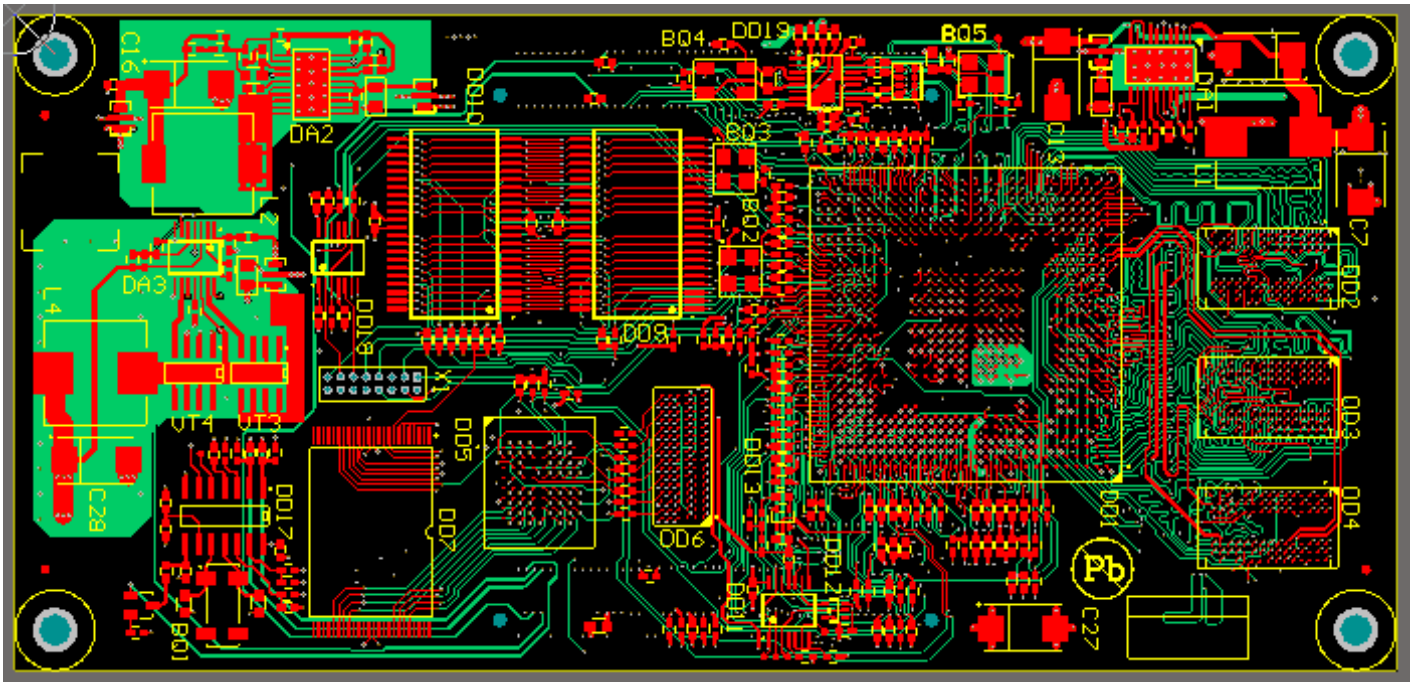

Printed Circuit Board Design Services Asia Pacific Circuits Co

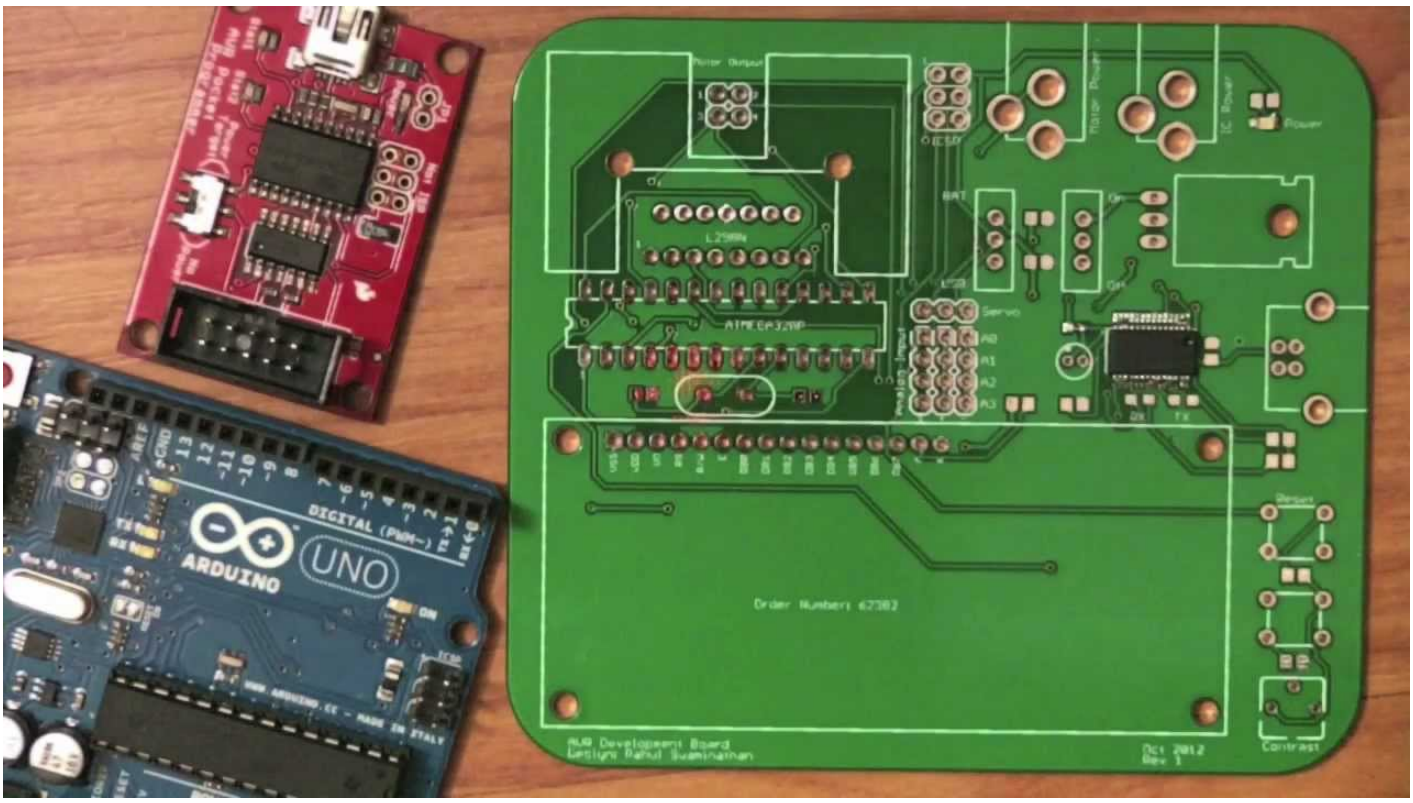

Pcb Design Tips General Electronics Tutorial Youtube

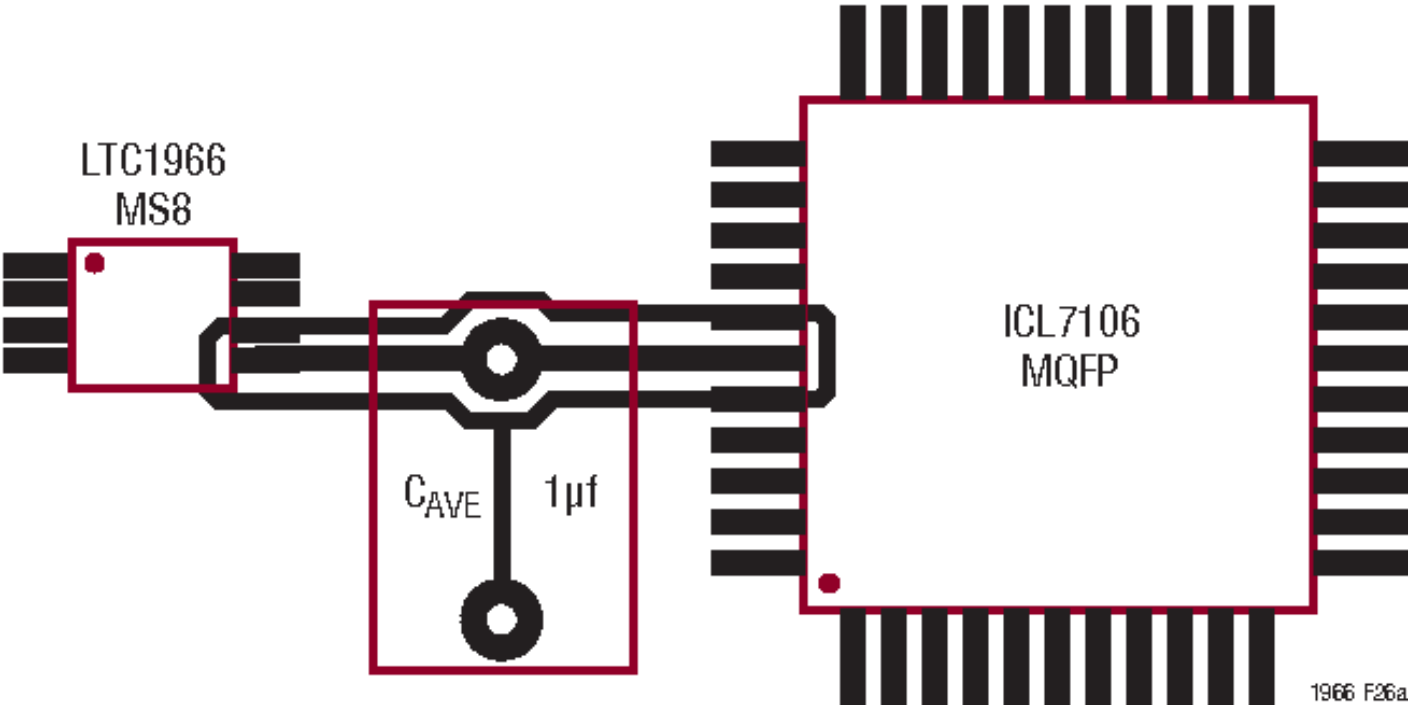

Figure 26 From Typical Application Features Description Precision

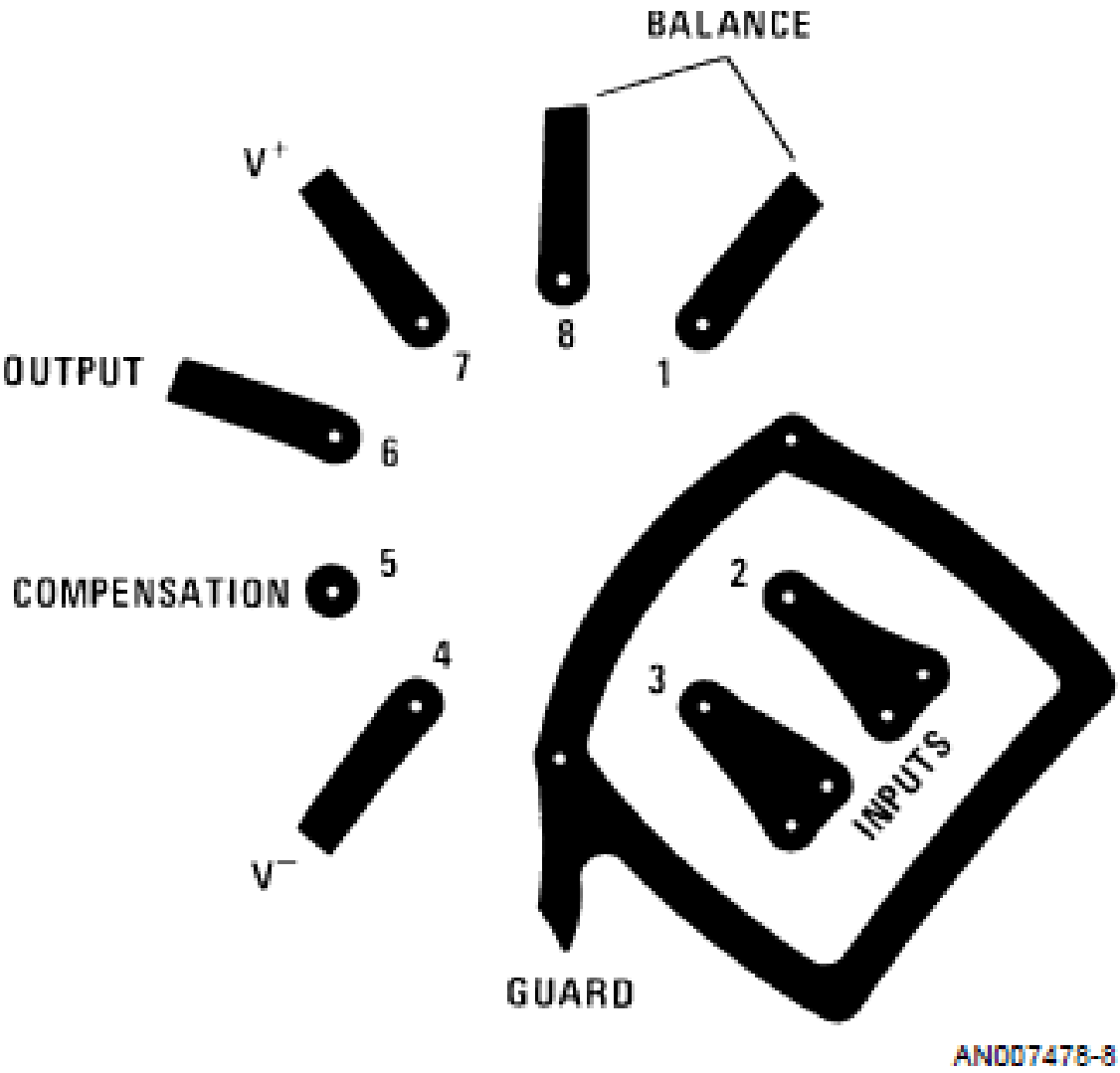

Bottom View

Implementing Guard Trace Ring In Pcb Design Electrical

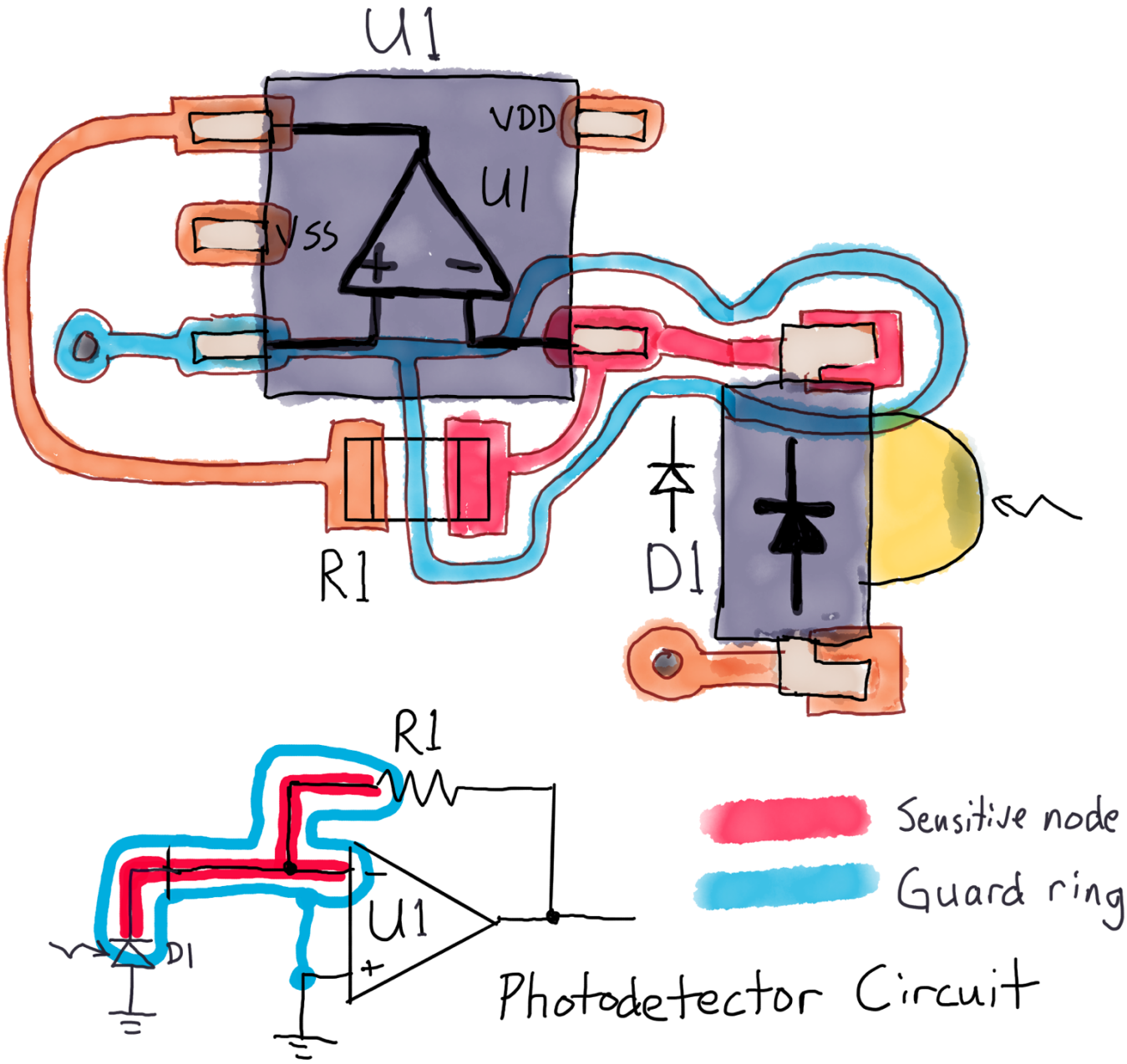

Corrosion In Printed Circuit Boards Tempo Automation Medium

Https Ieeexplore Ieee Org Iel5 101 4049871 04049877 Pdf

When And Why To Use A Pcb Guard Ring Tempo