REVISION HISTORY			
REV.	DISCRIPTION	DATE	APP'D
A	DRAWING ORIGINATION	08/04/05	JL
B	DRAWING FORMAT MODIFICATION	09/13/06	JL
C	CHANGE DRAWING LOGO AND COMPANY NAME	11/28/07	JL

Top View

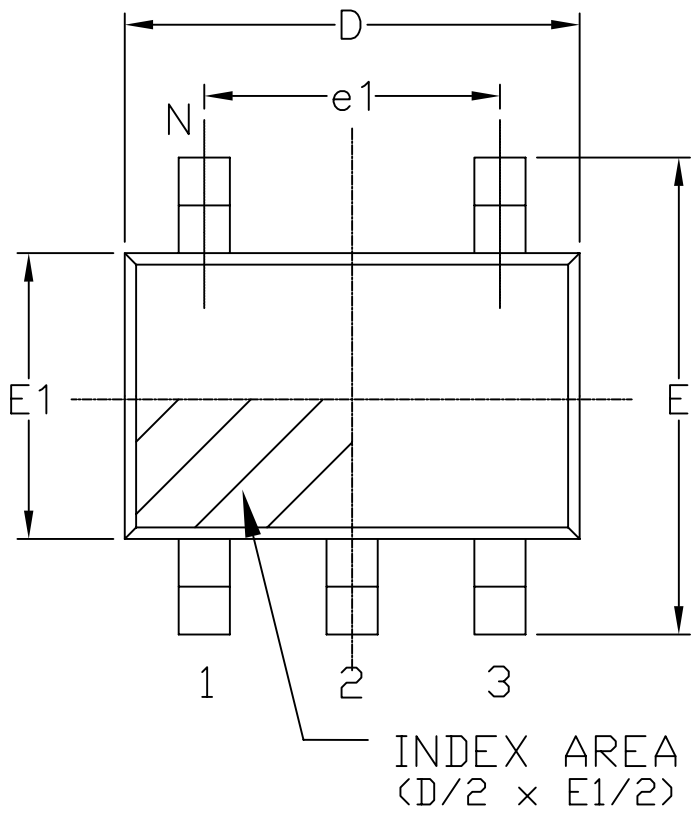

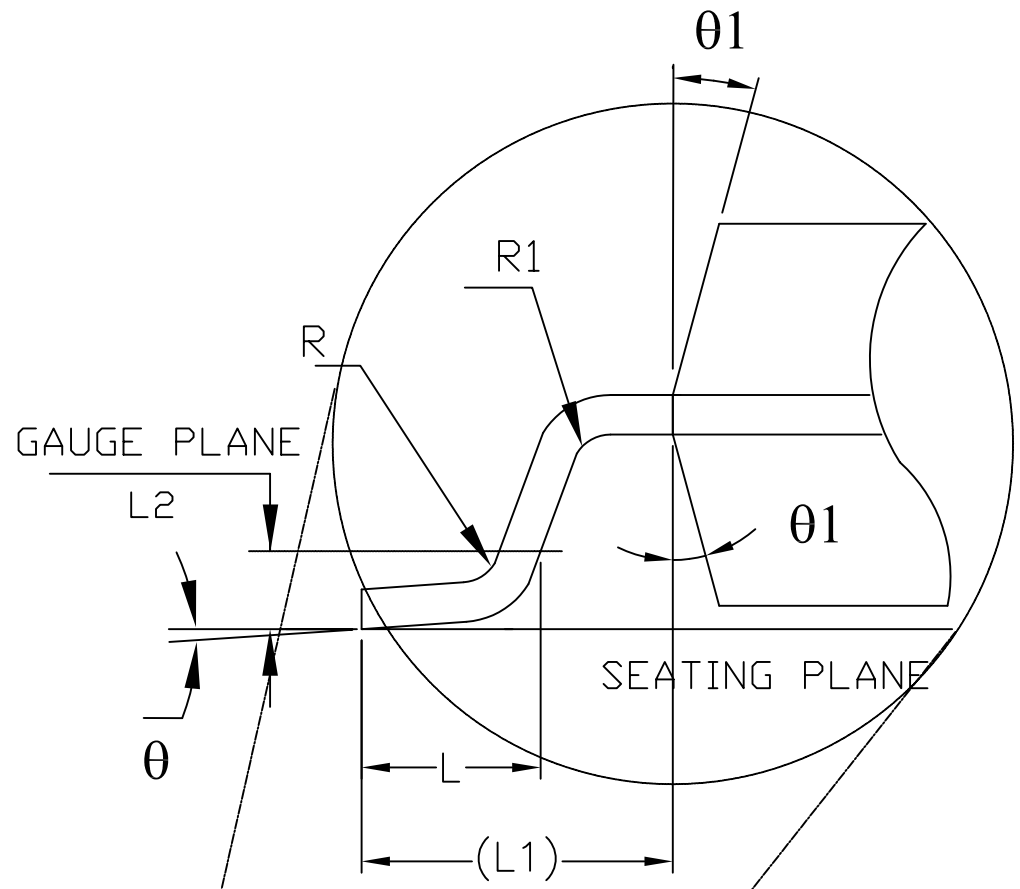

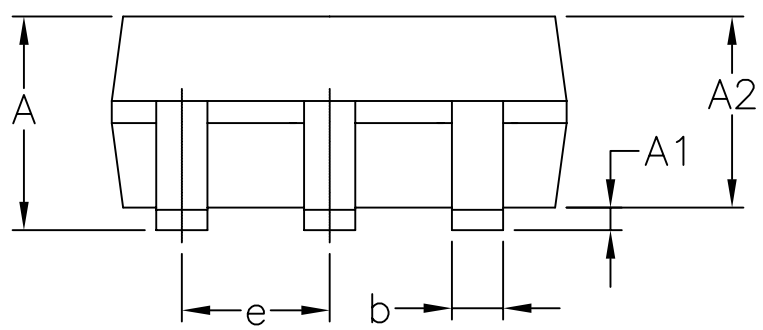

Side View

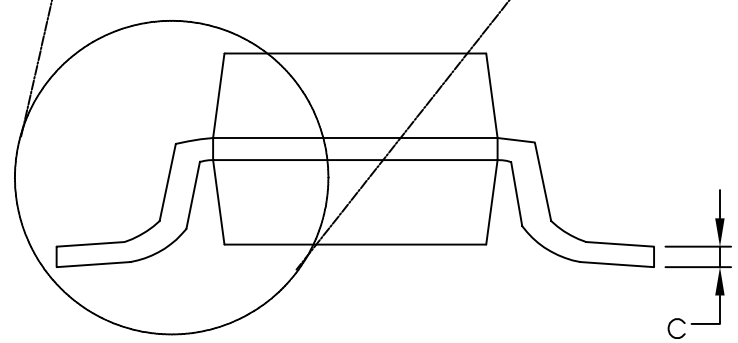

Front View

5 Pin TSOT JEDEC MO-193 Variation AB						
SYMBOLS	DIMENSIONS IN MM (Control Unit)			DIMENSIONS IN INCH (Reference Unit)		
	MIN	NOM	MAX	MIN	NOM	MAX
A	—	—	1.10	—	—	0.043
A1	0.00	—	0.10	0.000	—	0.004
A2	0.70	0.90	1.00	0.028	0.036	0.039
b	0.30	—	0.50	0.012	—	0.020
c	0.08	—	0.20	0.003	—	0.008
D	2.90 BSC			0.114 BSC		
E	2.80 BSC			0.110 BSC		
E1	1.60 BSC			0.063 BSC		
e	0.95 BSC			0.038 BSC		
e1	1.90 BSC			0.075 BSC		
L	0.30	0.45	0.60	0.012	0.018	0.024
L1	0.60 REF			0.024 REF		
L2	0.25 BSC			0.010 BSC		
R	0.10	—	—	0.004	—	—
R1	0.10	—	0.25	0.004	—	0.010
θ	0°	4°	8°	0°	4°	8°
θ1	4°	10°	12°	4°	10°	12°
N	5			5		

EXAR Powering Connectivity		EXAR CORPORATION	
		5 PIN TSOT PACKAGE OUTLINE	
Packaging Approval:		Drawing No: 5-PIN TSOT	
By: JL	Date: 11/28/07	Revision: C	Sheet: 1 OF 1