REVISION HISTORY			
REV.	DISCRIPTION	DATE	APP'D
A	DRAWING ORIGINATION	10/3/05	JL
B	DRAWING FORMAT MODIFICATION	07/25/06	JL
C	ADD LAND PATTERN RECOMMENDATION	11/02/06	JL
D	CHANGE DRAWING LOGO AND COMPANY NAME	11/21/07	JL

Top View

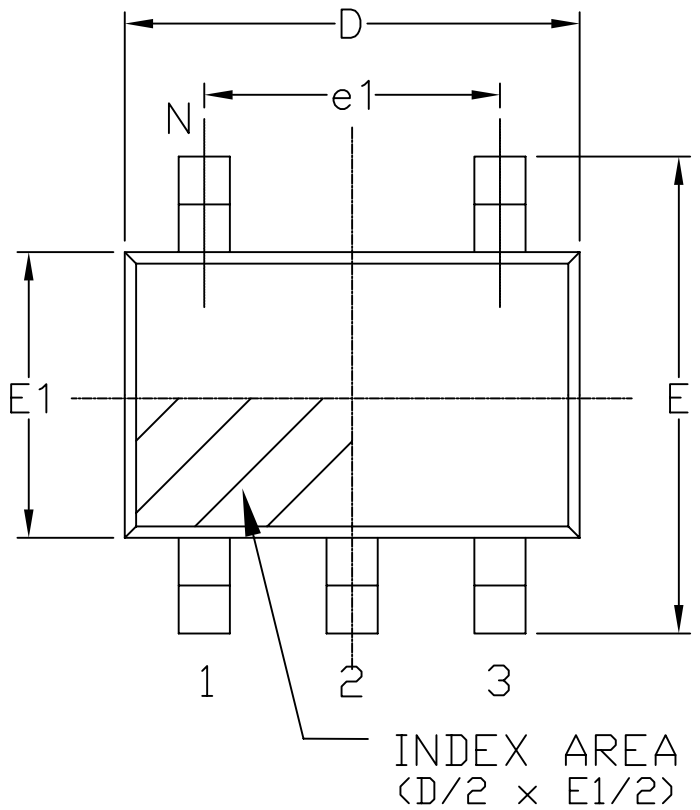

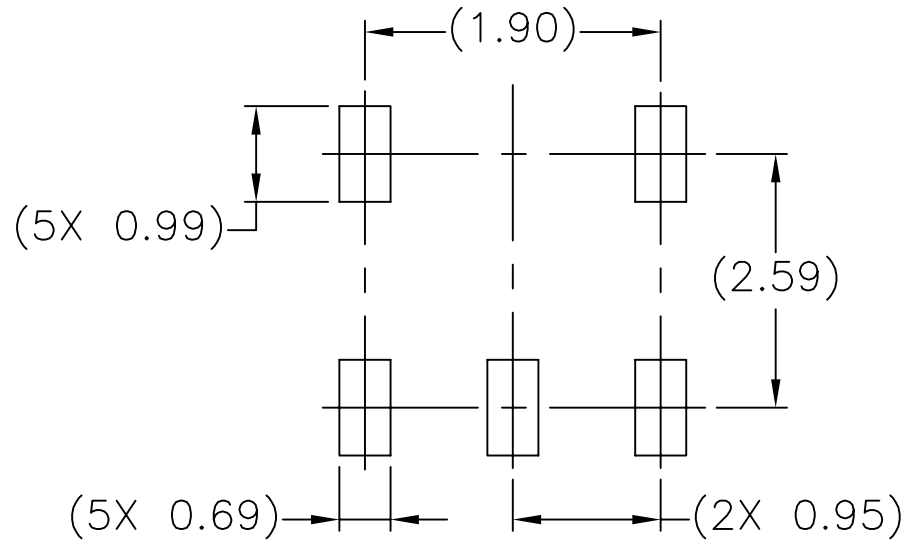

LAND PATTERN RECOMMENDATION

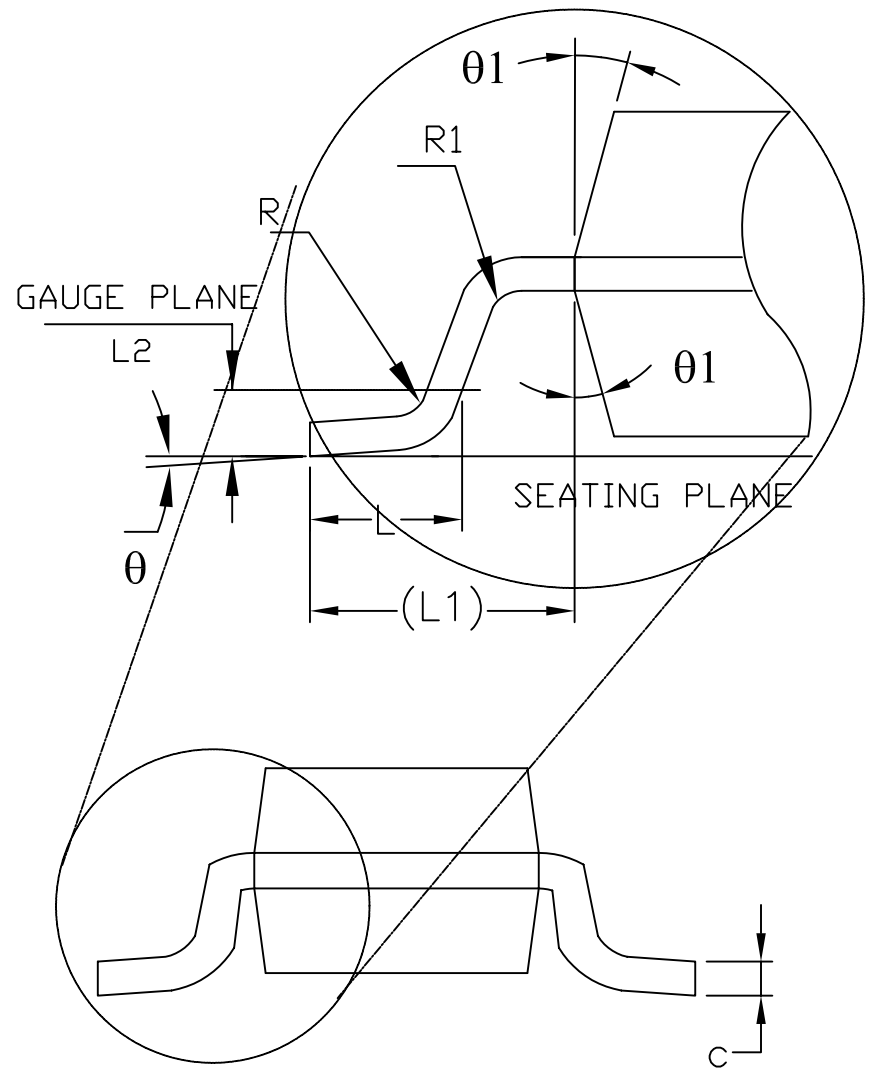

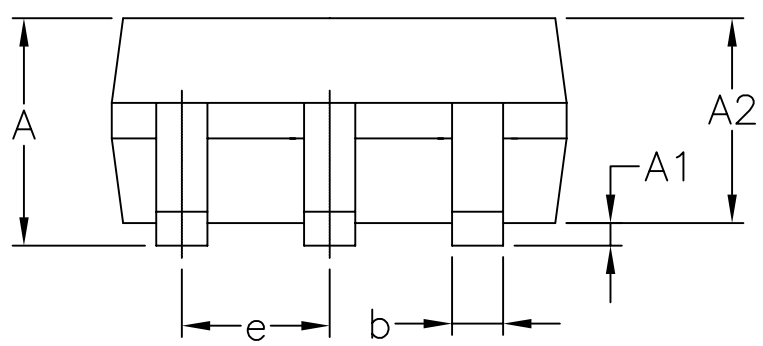

Side View

Front View

5 Pin SOT-23 JEDEC MO-178 Variation AA

SYMBOLS	DIMENSIONS IN MM (Control Unit)			DIMENSIONS IN INCH (Reference Unit)		
	MIN	NOM	MAX	MIN	NOM	MAX
A	—	—	1.45	—	—	0.057
A1	0.00	—	0.15	0.000	—	0.006
A2	0.90	1.15	1.30	0.036	0.045	0.051
b	0.30	—	0.50	0.012	—	0.020
c	0.08	—	0.22	0.003	—	0.009
D	2.90 BSC			0.115 BSC		
E	2.80 BSC			0.111 BSC		
E1	1.60 BSC			0.063 BSC		
e	0.95 BSC			0.038 BSC		
e1	1.90 BSC			0.075 BSC		
L	0.30	0.45	0.60	0.012	0.018	0.024
L1	0.60 REF			0.024 REF		
L2	0.25 BSC			0.010 BSC		
R	0.10	—	—	0.004	—	—
R1	0.10	—	0.25	0.004	—	0.010
θ	0°	4°	8°	0°	4°	8°
θ1	5°	10°	15°	5°	10°	15°
N	5			5		

EXAR Powering Connectivity	EXAR CORPORATION		
	5 PIN SOT-23 PACKAGE OUTLINE		
Packaging Approval:		Drawing No:	5-PIN SOT-23
By: JL	Date: 11/21/07	Revision: D	Sheet: 1 OF 1