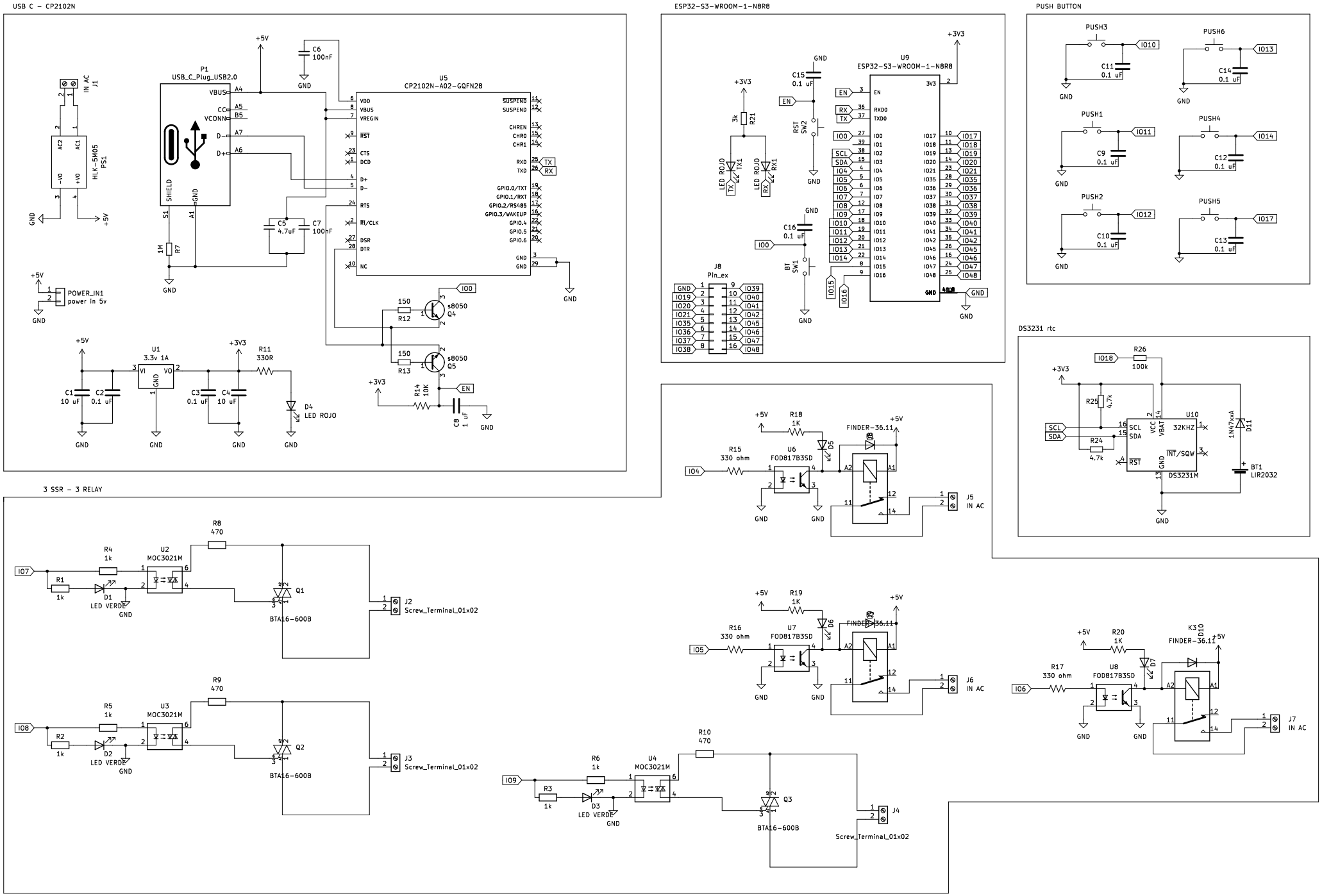
USB C - CP2102N
P1
USB_C_Plug_USB2.0
U5
CP2102N-A02-GQFN28
IN AC
J1
HLK-5M05
PS1
POWER_IN1
power in 5v
U1
3.3v 1A
C1
10 uF
C2
0.1 uF
C3
0.1 uF
C4
10 uF
R11
330R
D4
LED ROJO
C5
4.7uF
C7
100nF
C6
100nF
R7
1M
R12
150
R13
150
s8050
Q4
s8050
Q5
R14
10K
C8
1 uF
ESP32-S3-WROOM-1-N8R8
U9
ESP32-S3-WROOM-1-N8R8
R21
3k
LED ROJO
C15
0.1 uF
C16
0.1 uF
RST
SW2
BT
SW1
J8
Pin_ex
PUSH BUTTON
PUSH3
PUSH6
PUSH1
PUSH4
PUSH2
PUSH5
C11
0.1 uF
C14
0.1 uF
C9
0.1 uF
C12
0.1 uF
C10
0.1 uF
C13
0.1 uF
DS3231 rtc
R26
100k
R25
4.7k
R24
4.7k
U10
32KHZ
DS3231M
1N4734A
D11
BT1
LIR2032
3 SSR - 3 RELAY
R18
1K
R15
330 ohm
U6
FOD817B3SD
D5
FINDER-36.11
J5
IN AC
R19
1K
R16
330 ohm
U7
FOD817B3SD
D6
FINDER-36.11
J6
IN AC
R20
1K
R17
330 ohm
U8
FOD817B3SD
D7
K3
D10
FINDER-36.11
J7
IN AC
R8
470
R4
1k
U2
MOC3021M
R1
1k
D1
LED VERDE
Q1
BTA16-600B
J2
Screw_Terminal_01x02
R9
470
R5
1k
U3
MOC3021M
R2
1k
D2
LED VERDE
Q2
BTA16-600B
J3
Screw_Terminal_01x02
R10
470
R6
1k
U4
MOC3021M
R3
1k
D3
LED VERDE
Q3
BTA16-600B
J4
Screw_Terminal_01x02