REVISION HISTORY			
REV.	DISCRIPTION	DATE	APP'D
A	DRAWING ORIGINATION	04/19/06	JL
B	ADD LAND PATTERN RECOMMENDATION	05/22/07	JL
C	CHANGE DRAWING LOGO AND COMPANY NAME	11/21/07	JL

Top View

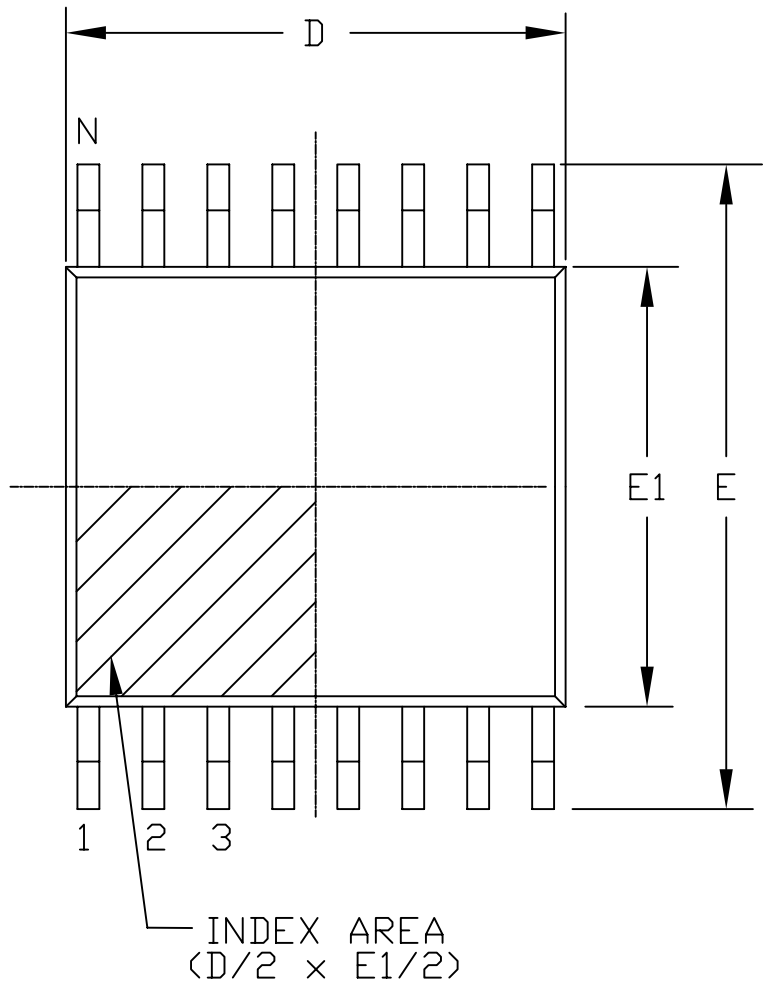

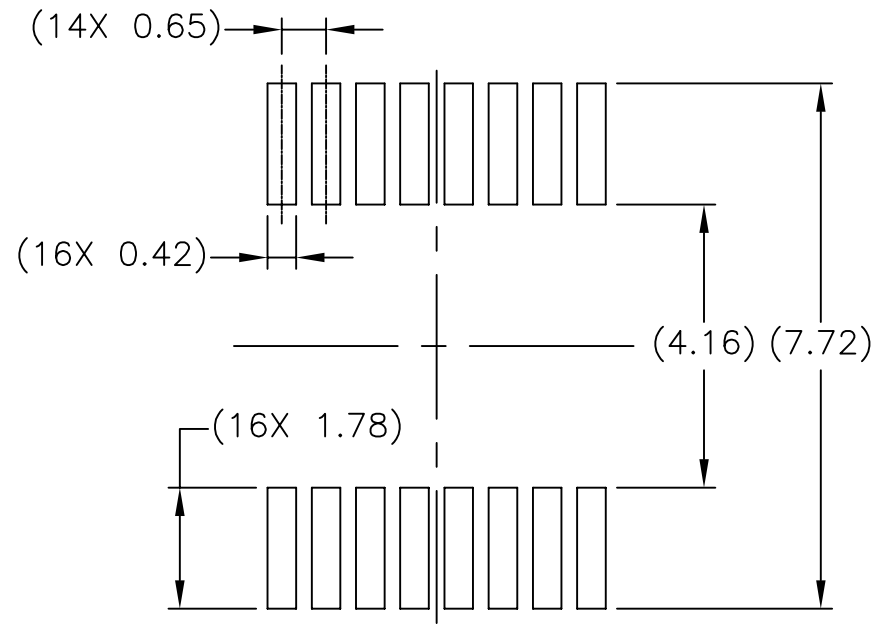

LAND PATTERN RECOMMENDATION

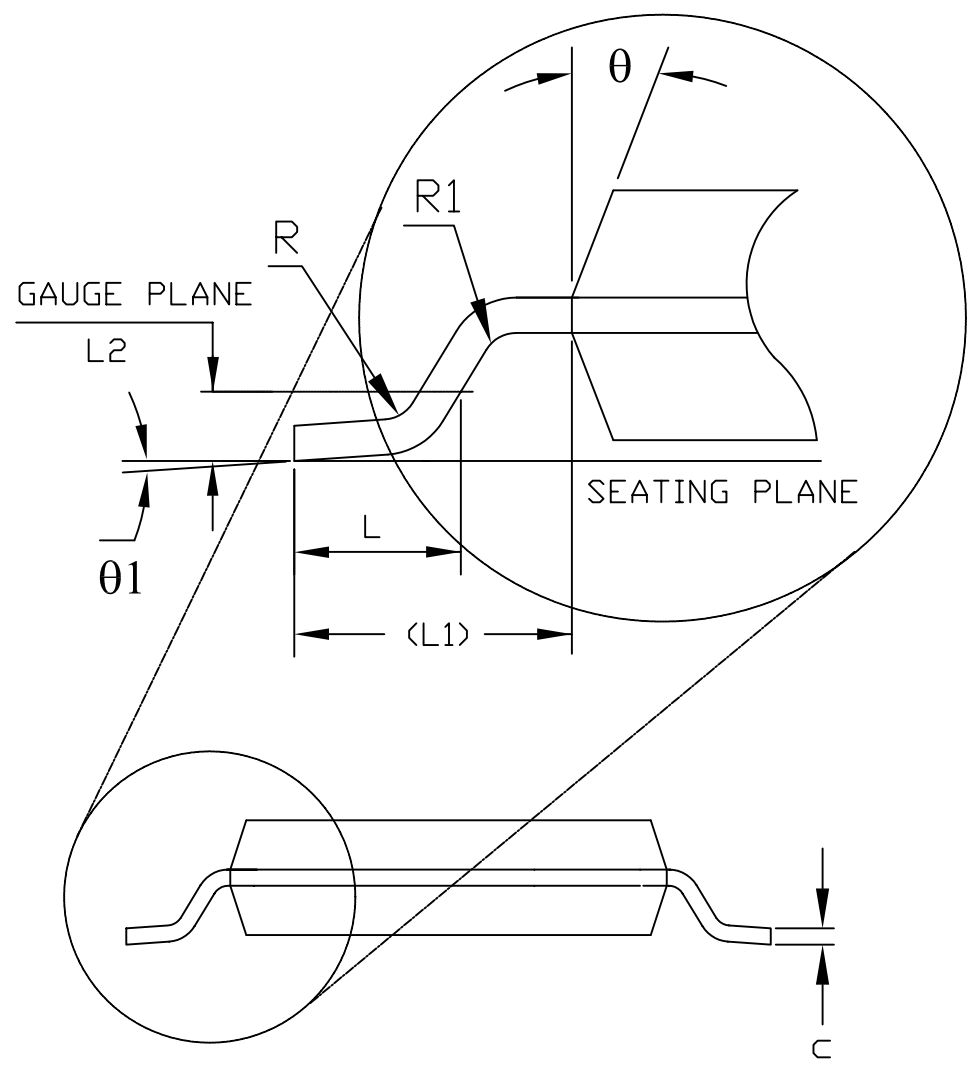

Front View

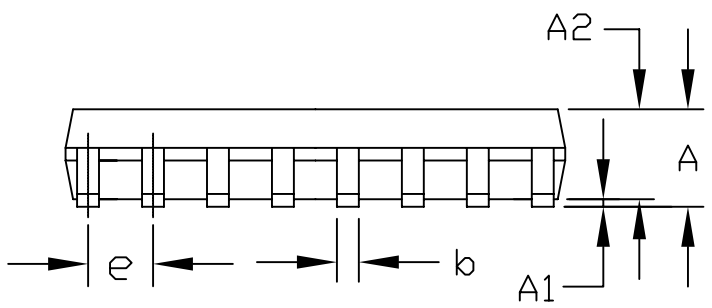

Side View

16 Pin TSSOP JEDEC MO-153 Variation AB						
SYMBOLS	DIMENSIONS IN MM (Control Unit)			DIMENSIONS IN INCH (Reference Unit)		
	MIN	NOM	MAX	MIN	NOM	MAX
A	—	—	1.20	—	—	0.047
A1	0.05	—	0.15	0.002	—	0.006
A2	0.80	1.00	1.05	0.031	0.039	0.041
b	0.19	—	0.30	0.007	—	0.012
c	0.09	—	0.20	0.004	—	0.008
E	6.40 BSC			0.252 BSC		
E1	4.30	4.40	4.50	0.169	0.173	0.177
e	0.65 BSC			0.026 BSC		
L	0.45	0.60	0.75	0.018	0.024	0.030
L1	1.00 REF			0.039 REF		
L2	0.25 BSC			0.010 BSC		
R	0.09	—	—	0.035	—	—
R1	0.09	—	—	0.035	—	—
θ	12° REF			12° REF		
θ1	0°	—	8°	0°	—	8°
D	4.90	5.00	5.10	0.193	0.197	0.200
N	16			16		

EXAR Powering Connectivity

EXAR CORPORATION

16 PIN TSSOP PACKAGE OUTLINE

Packaging Approval:

Drawing No: 16-PIN TSSOP

By: JL Date: 11/21/07

Revision: C Sheet: 1 OF 1