US006807310B1

(12) **United States Patent**
Dugad et al.

(10) **Patent No.: US 6,807,310 B1**
(45) **Date of Patent: Oct. 19, 2004**

(54) **TRANSFORMATION OF IMAGE PARTS IN DIFFERENT DOMAINS TO OBTAIN RESULTANT IMAGE SIZE DIFFERENT FROM INITIAL IMAGE SIZE**

(75) Inventors: **Rakesh Champalal Dugad**, Champaign, IL (US); **Narendra Ahuja**, Champaign, IL (US)

(73) Assignee: **The Board of Trustees of the University of Illinois**, Urbana, IL (US)

(*) Notice: Subject to any disclaimer, the term of this patent is extended or adjusted under 35 U.S.C. 154(b) by 0 days.

(21) Appl. No.: **09/576,678**

(22) Filed: **May 23, 2000**

(51) **Int. Cl.**[7] **G06K 9/36**; G06K 9/32; G06F 17/14

(52) **U.S. Cl.** **382/248**; 382/235; 382/298; 708/402

(58) **Field of Search** 382/248, 235, 382/232, 233, 246, 250, 240, 298, 260; 375/240.11, 240.2, 240.12, 240.26; 708/402, 603

(56) **References Cited**

U.S. PATENT DOCUMENTS

5,708,732 A	*	1/1998	Merhav et al.	382/232
5,764,807 A	*	6/1998	Pearlman et al.	382/240
5,870,144 A	*	2/1999	Guerrera	375/240.2
5,875,039 A	*	2/1999	Ohsawa et al.	382/248
6,111,989 A	*	8/2000	Chang et al.	382/250
6,115,070 A	*	9/2000	Song et al.	375/240.12
6,456,745 B1	*	9/2002	Bruton et al.	382/298
6,526,099 B1	*	2/2003	Christopoulos et al.	375/240.26
6,587,590 B1	*	7/2003	Pan	382/250

OTHER PUBLICATIONS

Chang and Messerschmitt, "Manipulation and Compositing of MC–DCT Compressed Video," in IEEE Journal on Selected Areas in Communications, vol. 13, No. 1., Jan. 1995, pp. 1–11.

Natarajan and Vasudev,"A Fast Approximate Algorithm for Scaling Down Digital images in the DCT Domain," Hewlett–Packard Laboratories, Palo Alto, California, 1995, pp. 241–243.

Hu and Panchanathan, "Image/Video Spatial Scalability in Compressed Domain," in IEEE Transactions On Industrial Electronics, vol. 45, No. 1., Feb. 1998, pp. 23–31.

Merhav and Bhaskaran, "Fast Algorithms for DCT–Domain Image Down–Sampling and for Inverse Motion Compensation," in IEEE Transactions On Circuits and Systems for Video Technology, vol. 7, No. 3., Jun. 1997, pp. 468–476.

Smith and Rowe, "Algorithms for Manipulating Compressed Images," in IEEE Computer Graphics & Applications, Sep. 1993, pp. 34–42.

* cited by examiner

Primary Examiner—Wenpeng Chen
(74) *Attorney, Agent, or Firm*—Gary R. Gillen; Wildman, Harrold, Allen & Dixon LLP

(57) **ABSTRACT**

In one example, a transform component of a system receives a first plurality of image parts in a first domain that comprise an initial size. A transform component of the system transforms the first plurality of image parts to obtain a second plurality of image parts in a second domain different from the first domain. A transform component of the system transforms a plurality of image parts based on the second plurality of image parts to obtain a resultant plurality of image parts in the first domain that comprise a resultant size different from the initial size. In a further example, a transform component of a system applies sparse matrix multiplication to each of first and second image parts.

39 Claims, 12 Drawing Sheets

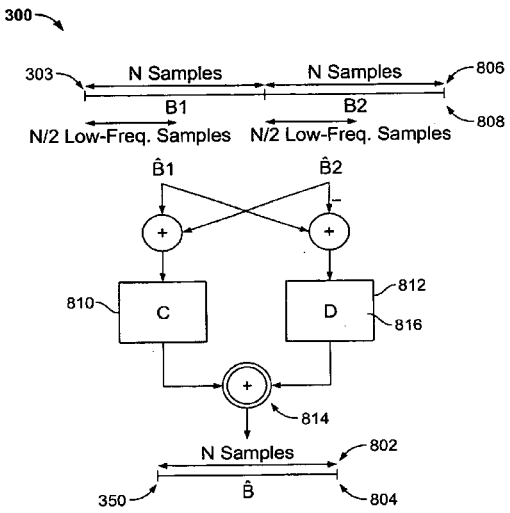

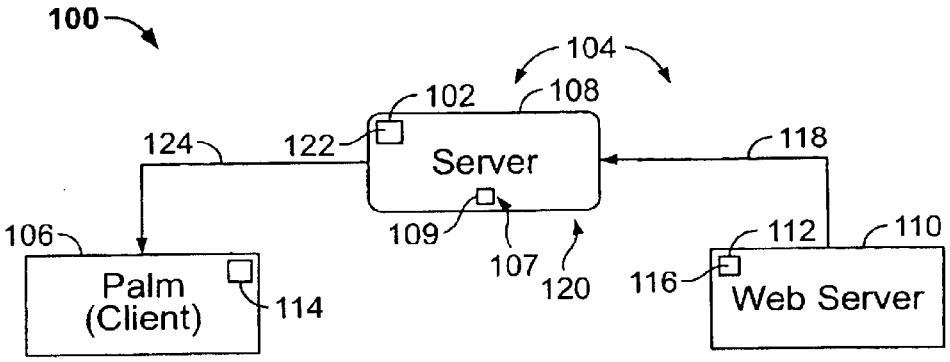
100
104
102
108
124
122
Server
118
106
109
107
120
112
110
116
Web Server
Palm
(Client)
114

FIG. 1

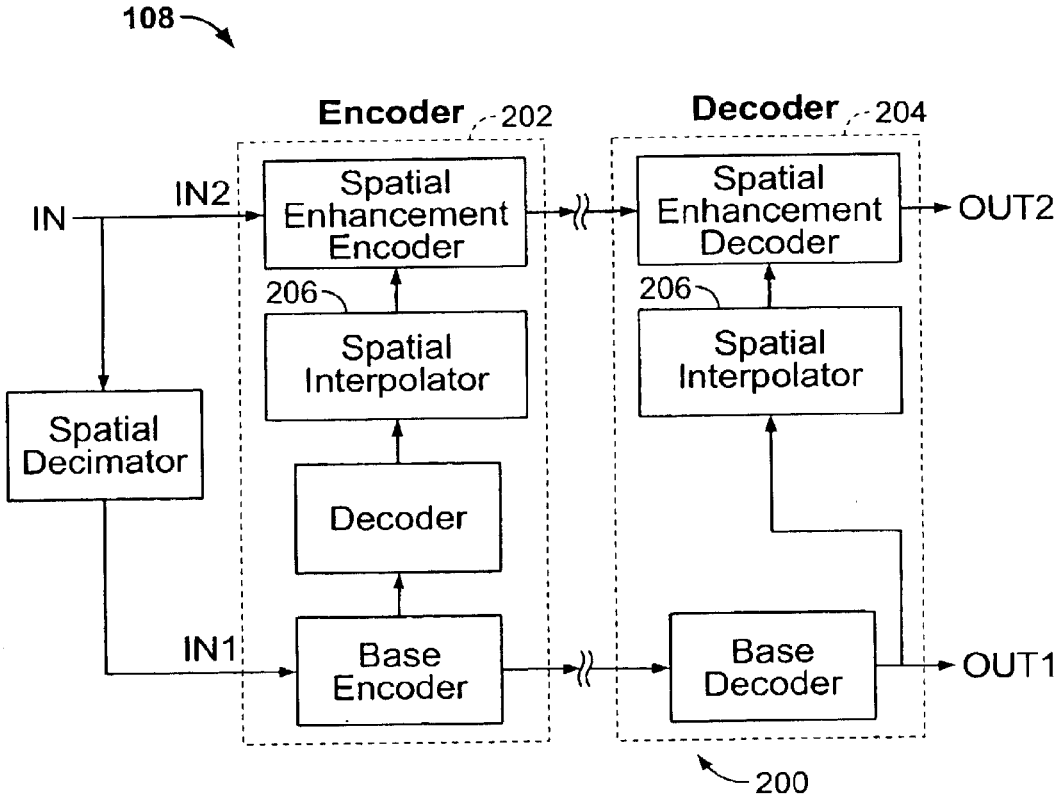
108
Encoder
202
Decoder
204
IN
IN2
Spatial
Enhancement
Encoder
Spatial
Enhancement
Decoder
OUT2
206
206
Spatial
Interpolator
Spatial
Interpolator
Spatial
Decimator
Decoder
IN1
Base
Encoder
Base
Decoder
OUT1
200

FIG. 2

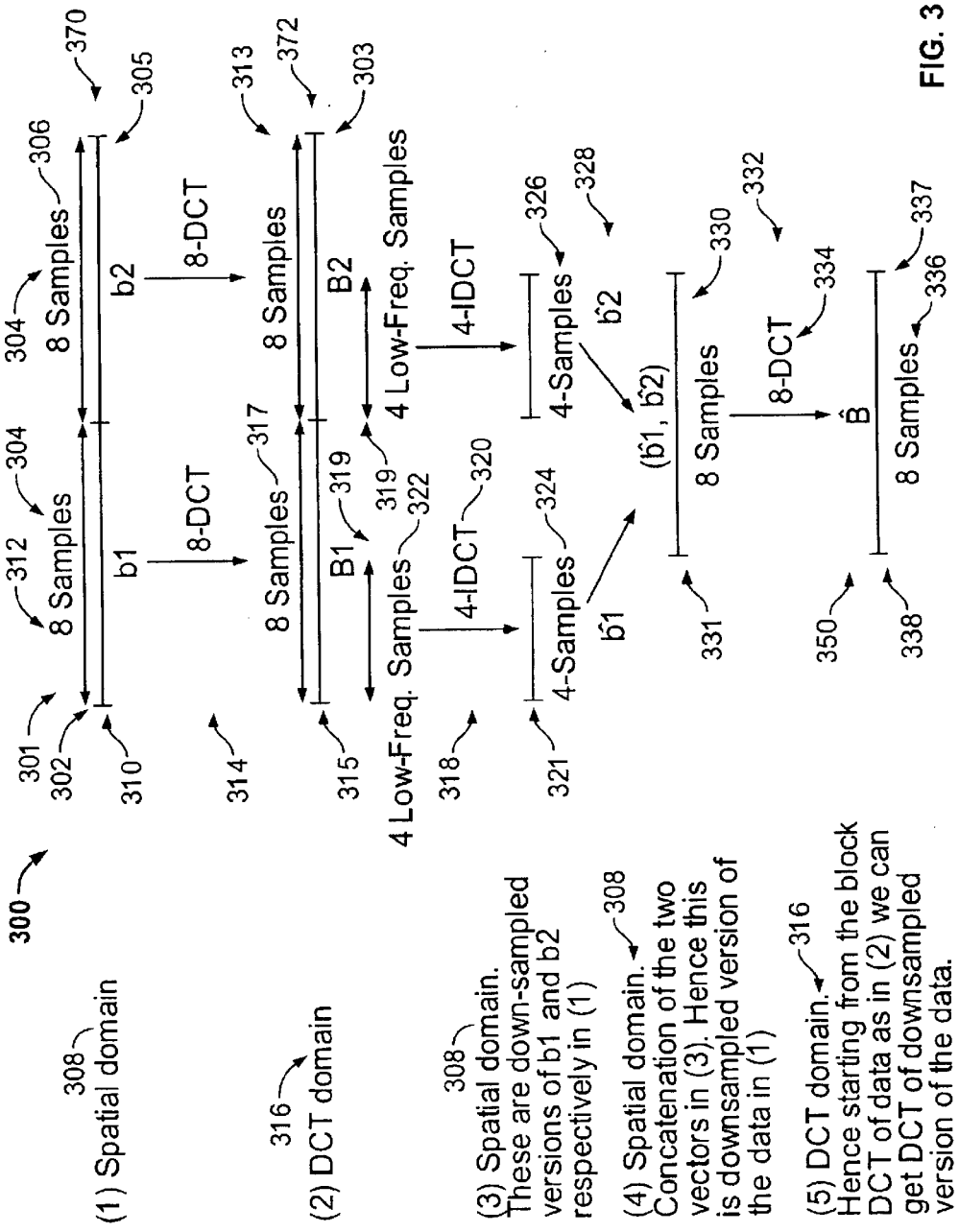
300
(1) Spatial domain
308
(2) DCT domain
316
(3) Spatial domain. These are down-sampled versions of b1 and b2 respectively in (1)
308
(4) Spatial domain. Concatenation of the two vectors in (3). Hence this is downsampled version of the data in (1)
308
(5) DCT domain. Hence starting from the block DCT of data as in (2) we can get DCT of downsampled version of the data.
316
301
302
310
312
304
8 Samples
304
8 Samples
306
370
305
b1
b2
8-DCT
8-DCT
314
8 Samples
317
8 Samples
313
372
303
315
B1
B2
319
319
4 Low-Freq. Samples
4 Low-Freq. Samples
318
4-IDCT
320
4-IDCT
321
4-Samples
324
4-Samples
326
328
b̂1
b̂2
(b̂1, b̂2)
8 Samples
330
331
8-DCT
332
334
B̂
8 Samples
336
337
350
338

FIG. 3

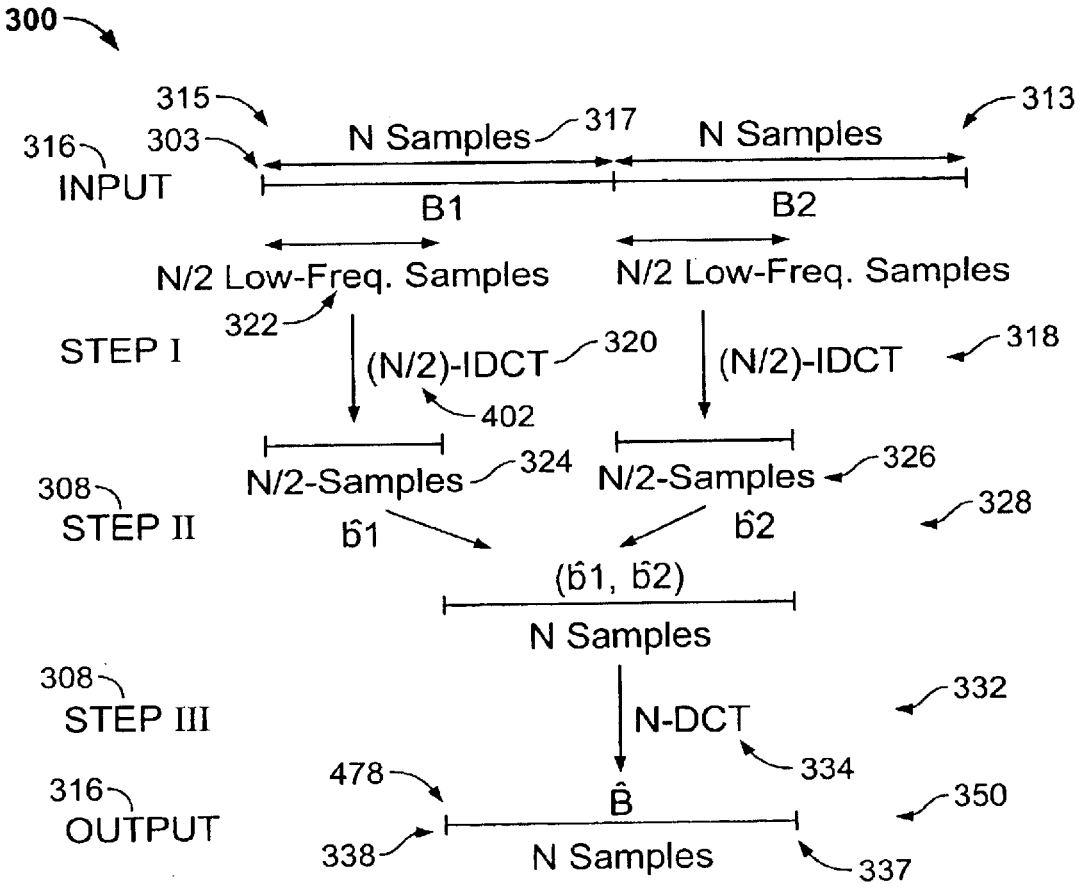
300
315
303
316
INPUT
N Samples
317
N Samples
313
B1
B2
N/2 Low-Freq. Samples
N/2 Low-Freq. Samples
322
STEP I
(N/2)-IDCT
320
(N/2)-IDCT
318
402
N/2-Samples
324
N/2-Samples
326
308
STEP II
b̂1
b̂2
328
(b̂1, b̂2)
N Samples
308
STEP III
N-DCT
332
334
478
316
OUTPUT
B̂
350
338
N Samples
337

FIG. 4

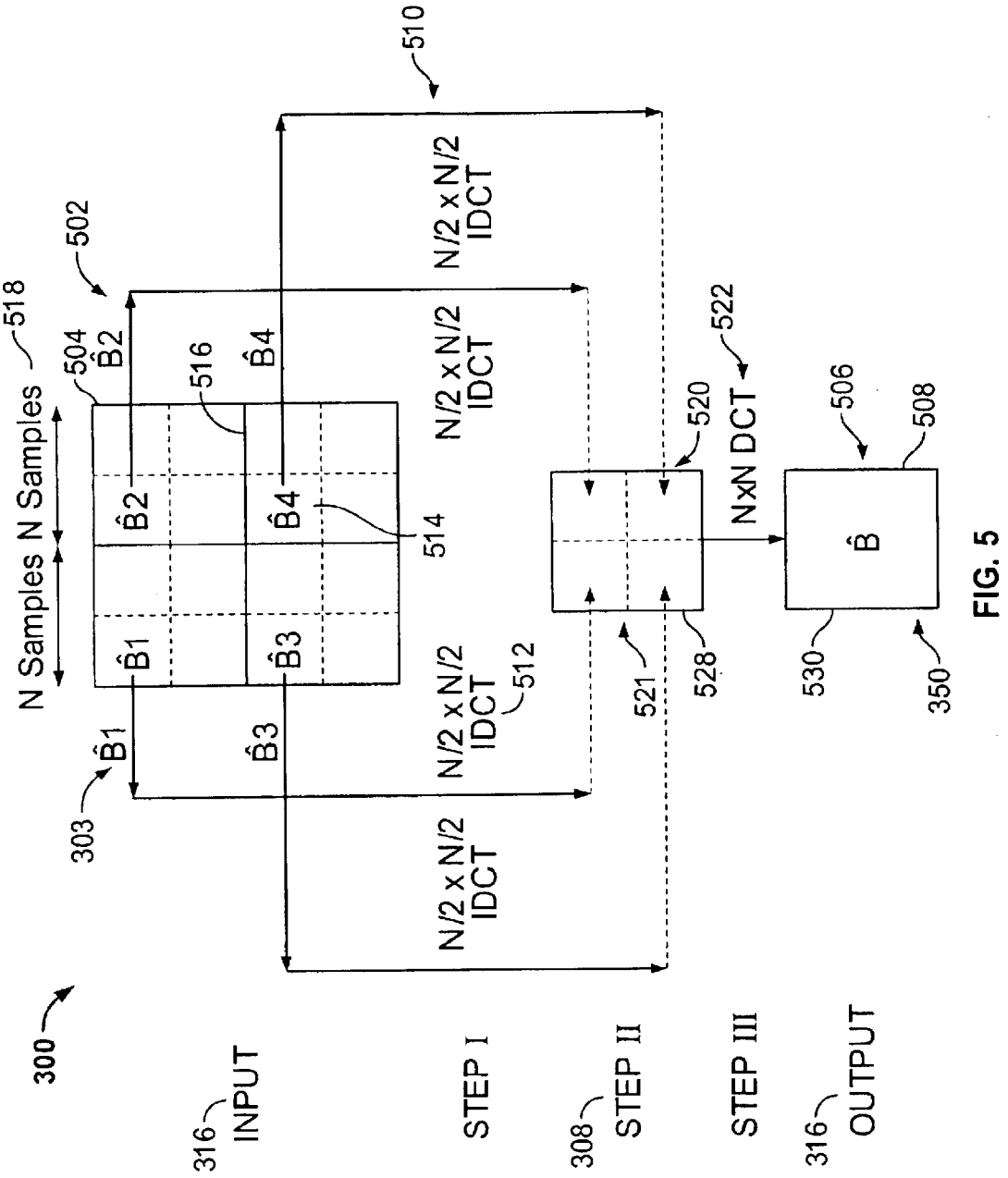
300
316 INPUT
STEP I
308 STEP II
STEP III
316 OUTPUT
N Samples
N Samples
518
502
504
516
514
B̂1
B̂2
B̂3
B̂4
303
510
N/2 x N/2 IDCT
N/2 x N/2 IDCT
N/2 x N/2 IDCT
N/2 x N/2 IDCT
512
520
521
522
NxN DCT
528
506
508
B̂
530
350

FIG. 5

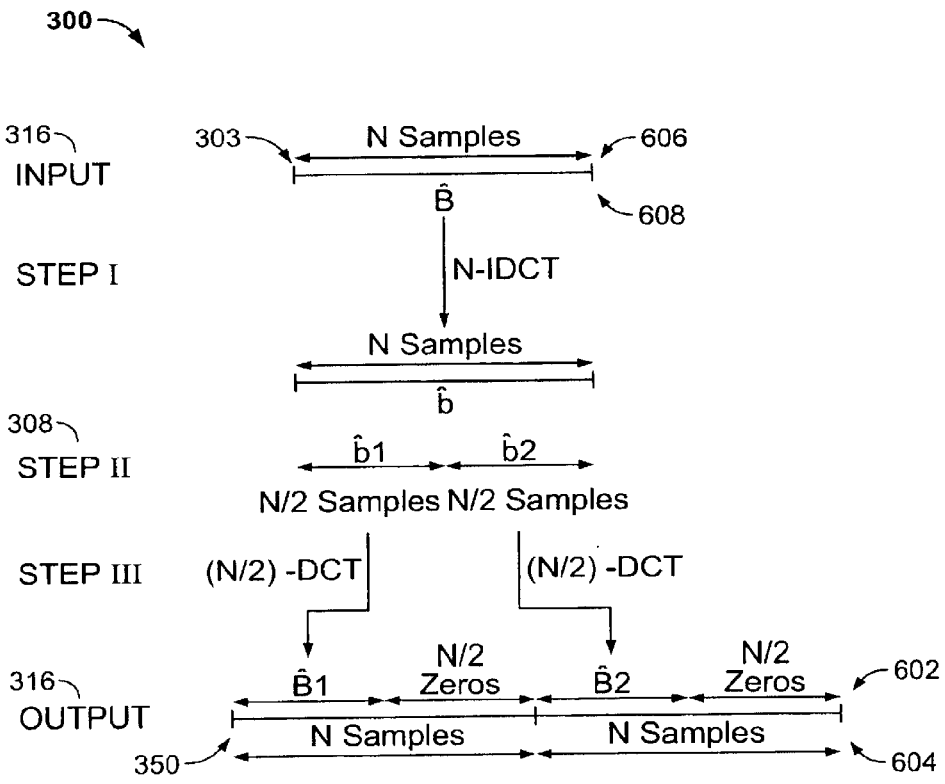
300
316
INPUT
303
N Samples
606
$\hat{B}$
608
STEP I
N-IDCT
N Samples
$\hat{b}$
308
STEP II
$\hat{b}1$
$\hat{b}2$
N/2 Samples N/2 Samples
STEP III
(N/2) -DCT
(N/2) -DCT
316
OUTPUT
$\hat{B}1$
N/2 Zeros
$\hat{B}2$
N/2 Zeros
602
N Samples
N Samples
350
604

FIG. 6

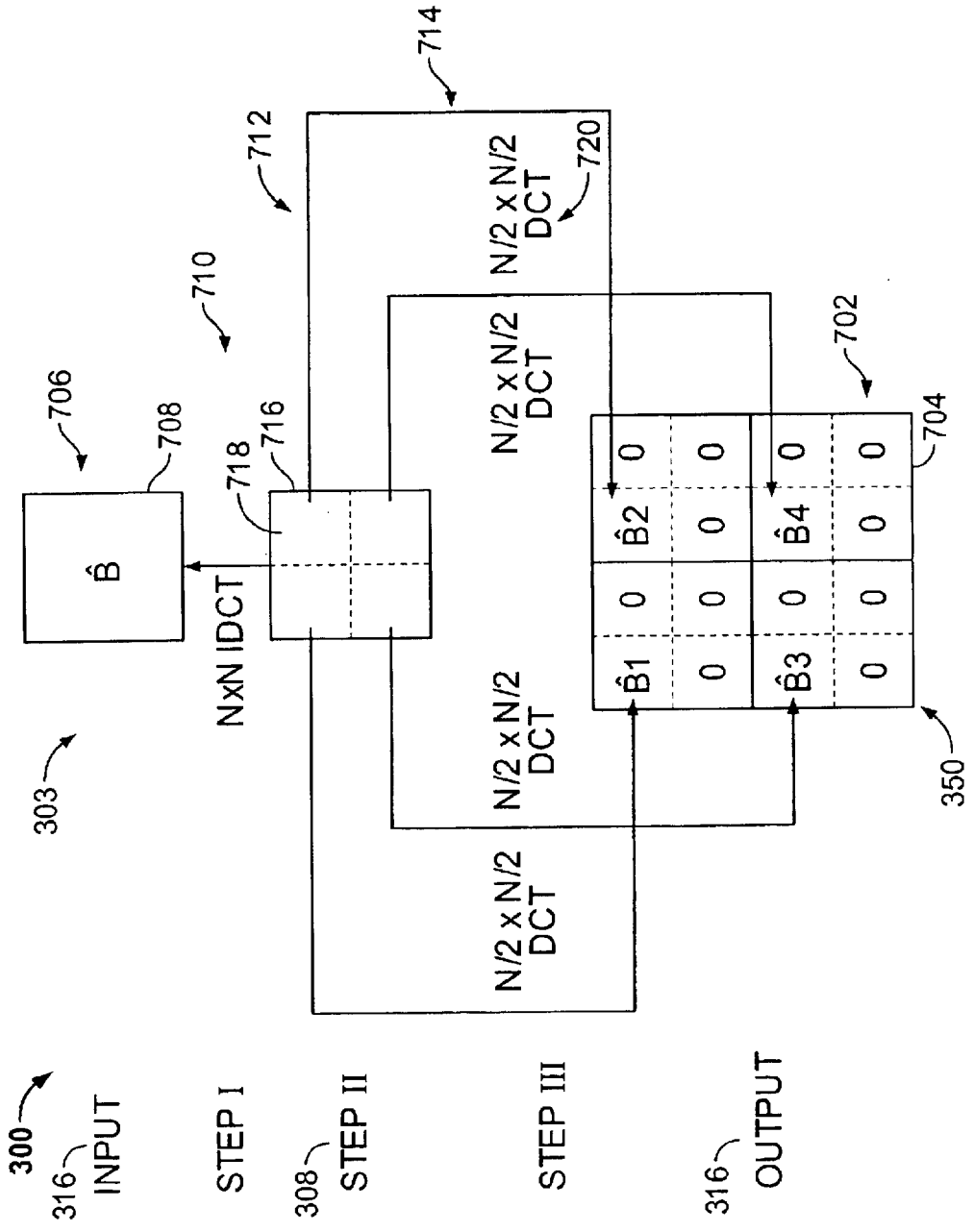
300
316
INPUT
STEP I
308
STEP II
STEP III
316
OUTPUT
303
NxN IDCT
N/2 x N/2 DCT
N/2 x N/2 DCT
N/2 x N/2 DCT
706
708
710
712
714
716
718
720
702
704
350
B̂
B̂1
B̂2
B̂3
B̂4
0

FIG. 7

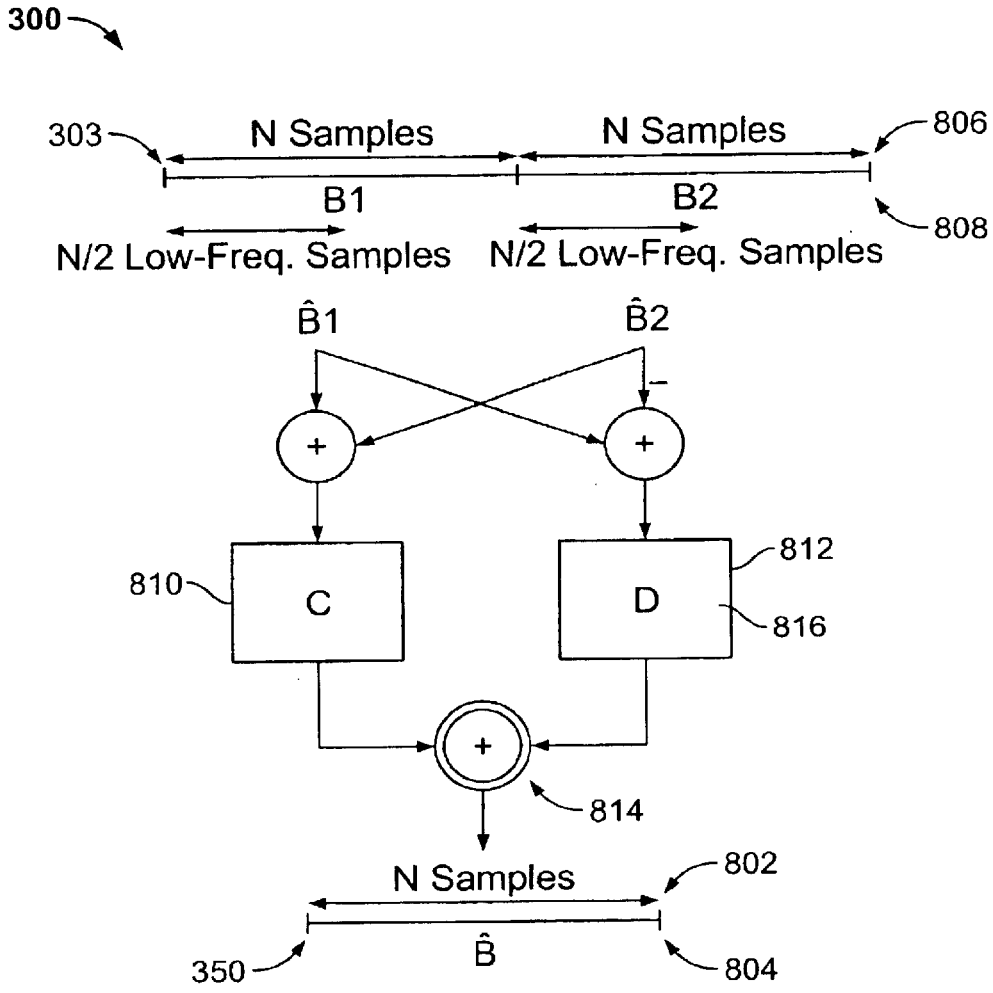
300
303
N Samples
N Samples
806
B1
B2
808
N/2 Low-Freq. Samples
N/2 Low-Freq. Samples
$\hat{B}1$
$\hat{B}2$
+
+
−
810
C
D
812
816
+
814
N Samples
802
$\hat{B}$
350
804

FIG. 8

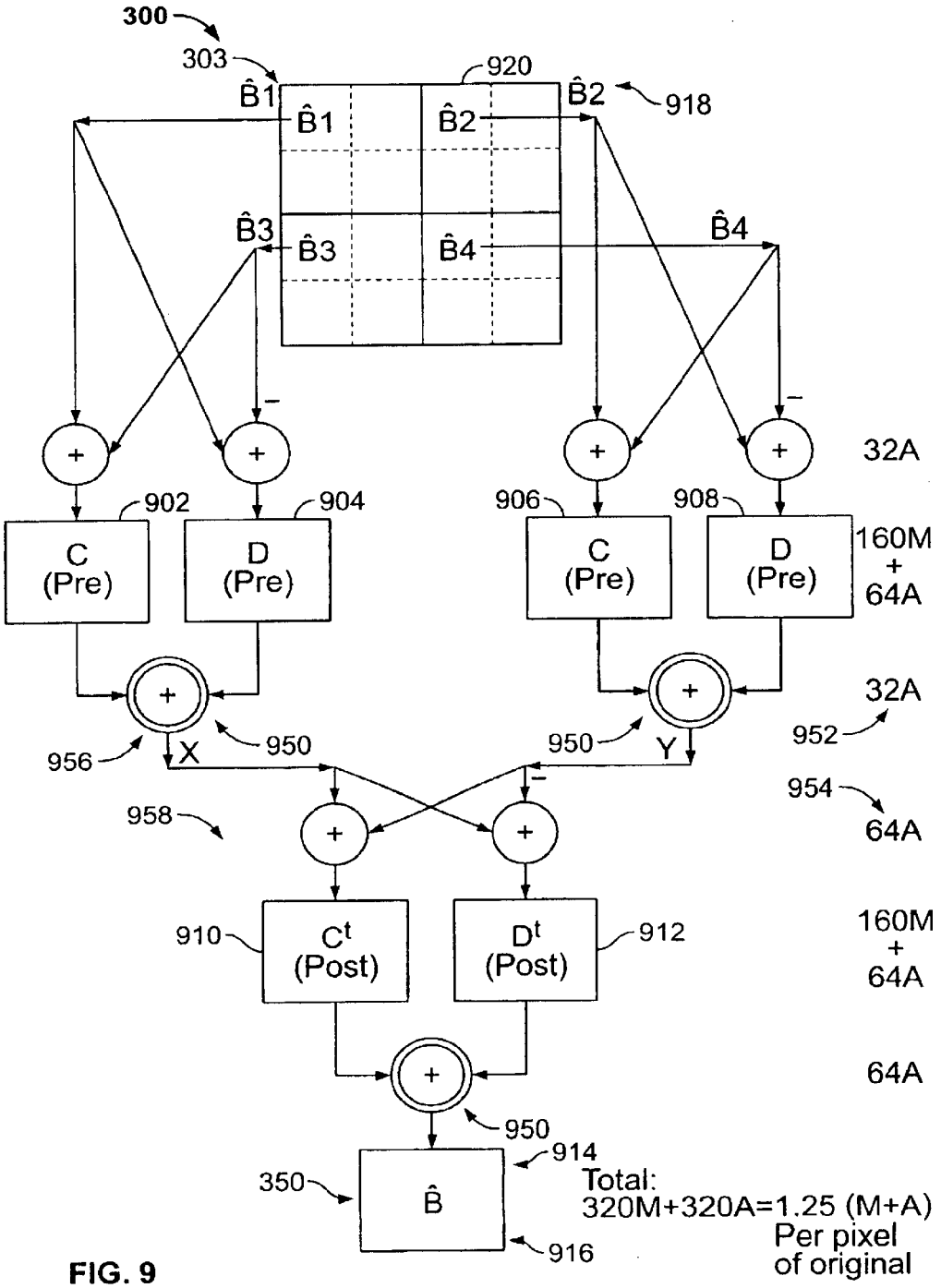
300
303
920
B̂1
B̂2
B̂3
B̂4
918
902
904
906
908
C (Pre)
D (Pre)
32A
160M + 64A
956
X
950
Y
952
954
64A
958
910
912
Ct (Post)
Dt (Post)
160M + 64A
64A
350
914
916
Total:
320M+320A=1.25 (M+A)
Per pixel of original

FIG. 9

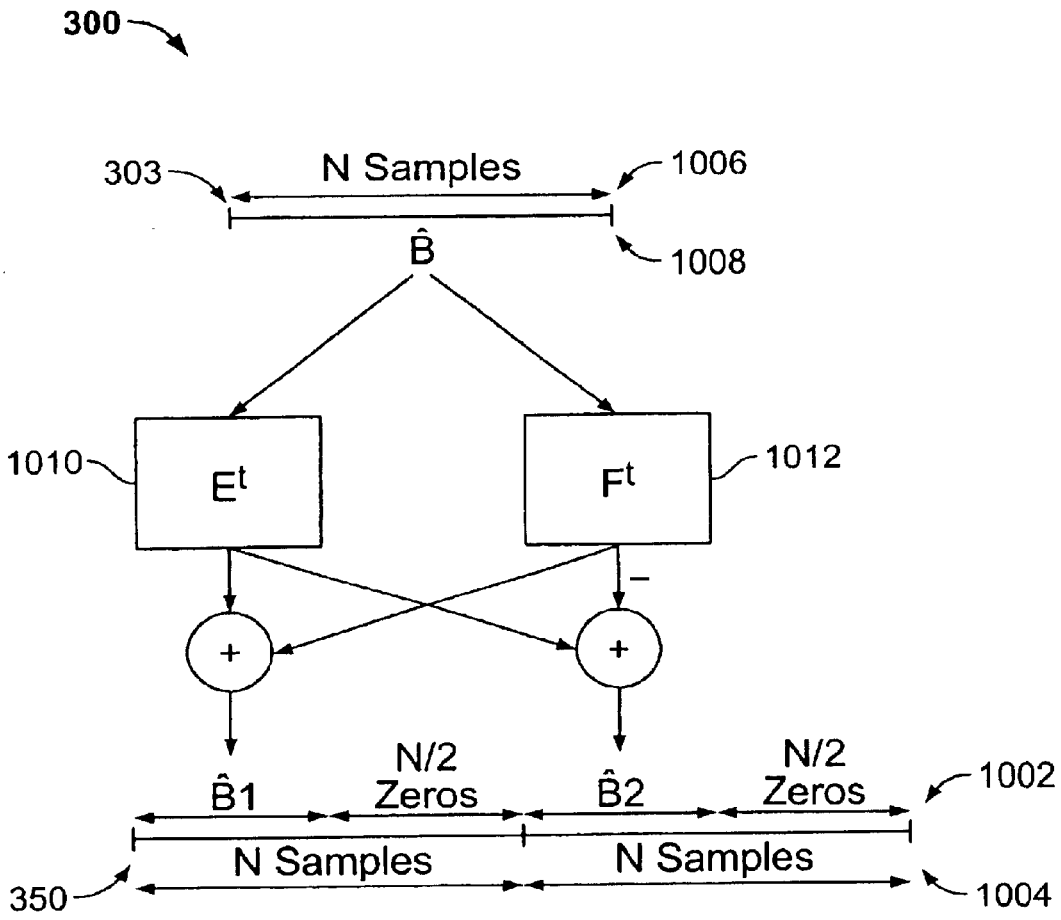
300
303
N Samples
1006
1008
$\hat{B}$
1010
E^t
F^t
1012
−
+
+
$\hat{B}1$
N/2 Zeros
$\hat{B}2$
N/2 Zeros
1002
N Samples
N Samples
350
1004

FIG. 10

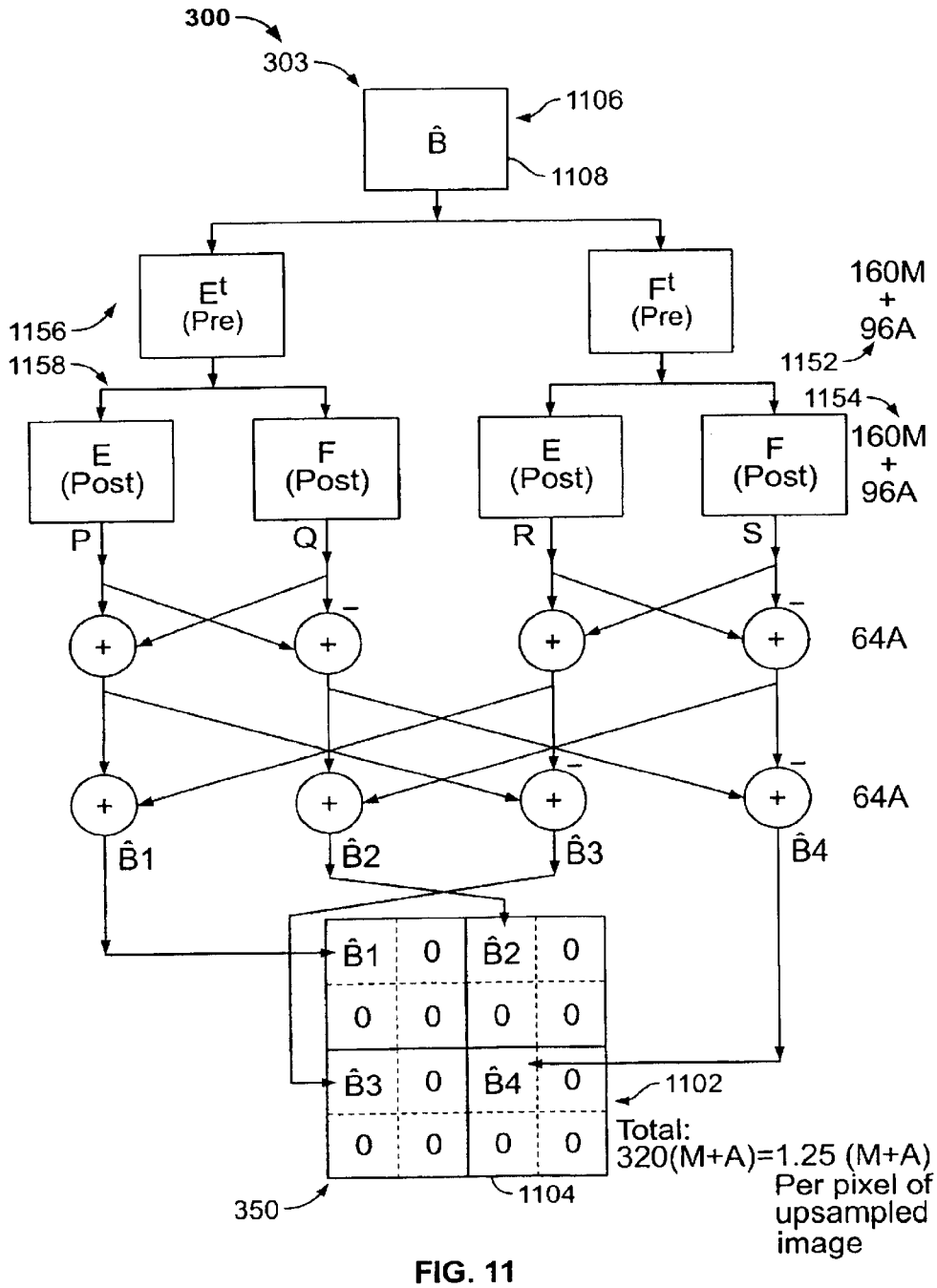
300
303
$\hat{B}$
1106
1108
E^t (Pre)
F^t (Pre)
160M + 96A
1156
1158
1152
1154
E (Post)
F (Post)
E (Post)
F (Post)
160M + 96A
P
Q
R
S
64A
64A
$\hat{B}1$
$\hat{B}2$
$\hat{B}3$
$\hat{B}4$
$\hat{B}1$ 0 $\hat{B}2$ 0
0 0 0 0
$\hat{B}3$ 0 $\hat{B}4$ 0
0 0 0 0
1102
Total:
320(M+A)=1.25 (M+A)
Per pixel of upsampled image
350
1104

FIG. 11

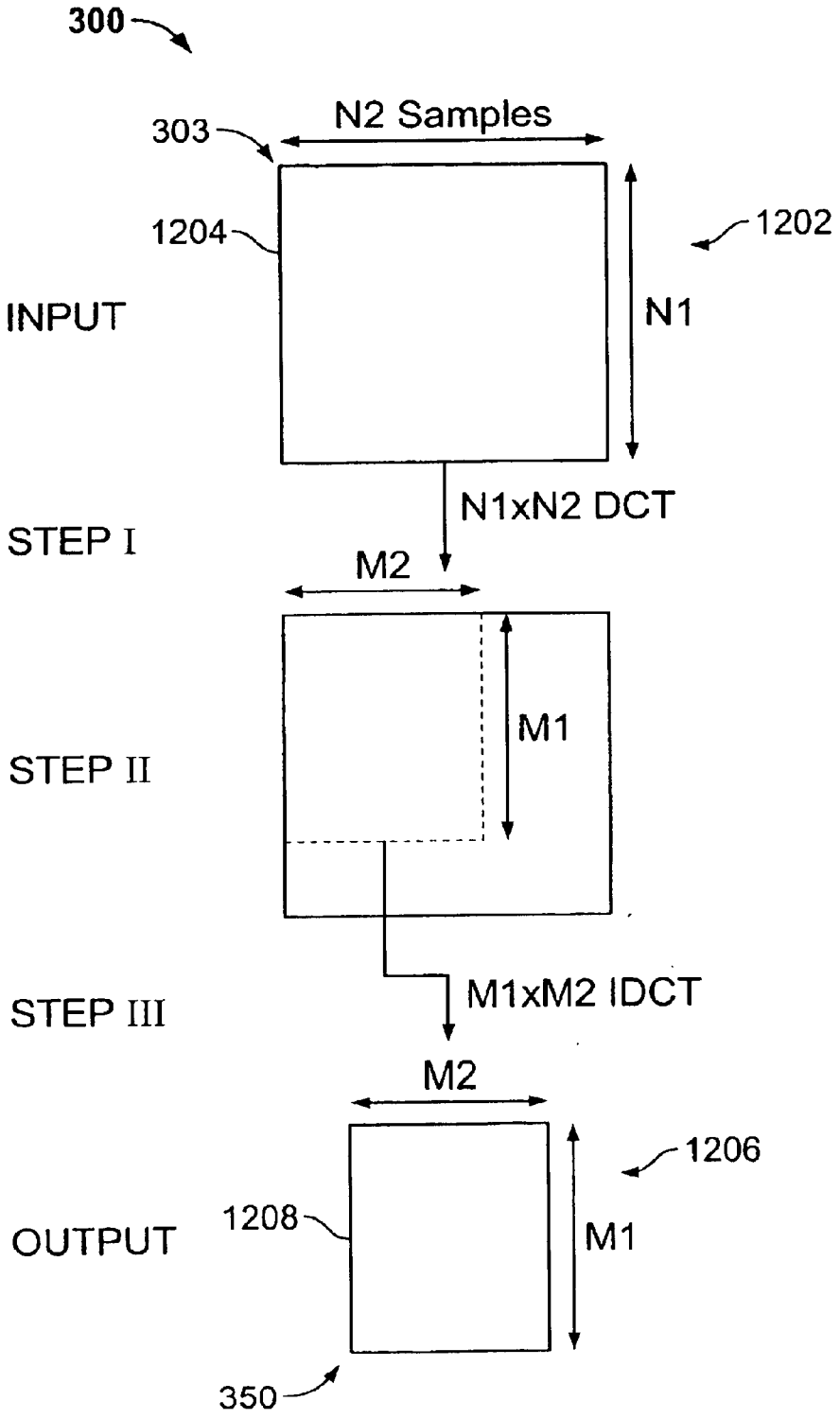
300
303
N2 Samples
1204
1202
INPUT
N1
N1xN2 DCT
STEP I
M2
M1
STEP II
M1xM2 IDCT
STEP III
M2
1206
1208
OUTPUT
M1
350

FIG. 12

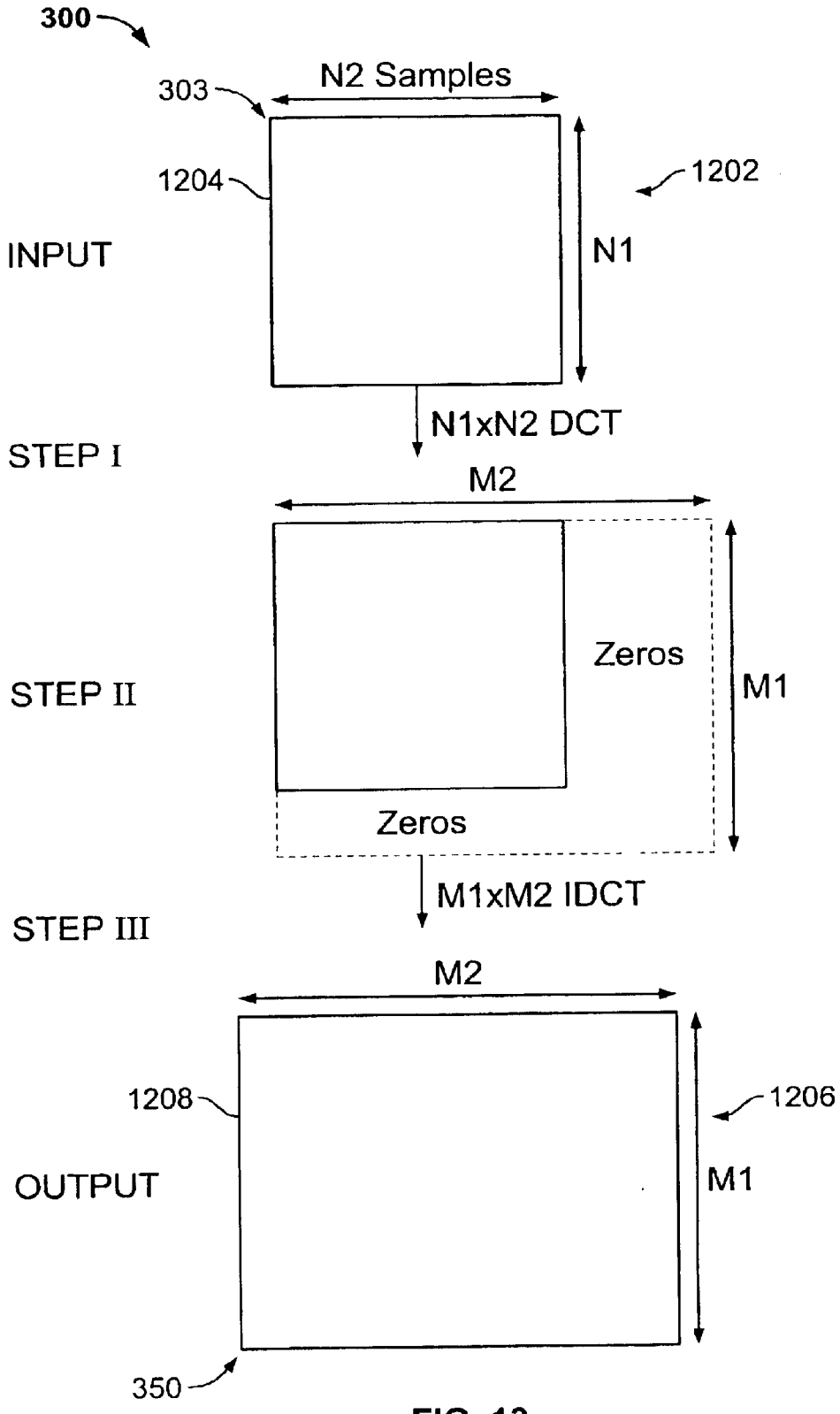
300
303
N2 Samples
1204
1202
INPUT
N1
N1xN2 DCT
STEP I
M2
STEP II
Zeros
M1
Zeros
M1xM2 IDCT
STEP III
M2
1208
1206
OUTPUT
M1
350

FIG. 13

TRANSFORMATION OF IMAGE PARTS IN DIFFERENT DOMAINS TO OBTAIN RESULTANT IMAGE SIZE DIFFERENT FROM INITIAL IMAGE SIZE

This invention was made with Government support under Contract Number ONR: N00014-96-1-0502 UFAS No. 1-5-20764 awarded by Office of Naval Research. The Government may have certain rights in the invention.

TECHNICAL FIELD

This invention relates generally to image processing and more particularly to changing size of an image in a compressed domain.

BACKGROUND OF THE INVENTION

A typical system stores data such as multimedia content for video, in a compressed digital format. To perform processing on this data, the typical system usually must uncompress the data, process the data, and then recompress the data. One shortcoming of such a system is the relatively high expenditure of time required for uncompressing and recompressing the data to allow performance of the data processing.

Thus, a need exists for enhanced processing of data that is stored by a system in a compressed format.

SUMMARY OF THE INVENTION

Pursuant to the present invention, shortcomings of the existing art are overcome and additional advantages are provided through the provision of transformation of image parts in different domains to obtain a resultant image size different from an initial image size.

The invention in one embodiment encompasses a method. A first plurality of image parts in a first domain that comprise an initial size, is received. The first plurality of image parts is transformed to obtain a second plurality of image parts in a second domain different from the first domain. A plurality of image parts based on the second plurality of image parts is transformed to obtain a resultant plurality of image parts in the first domain that comprise a resultant size different from the initial size.

Another embodiment of the invention encompasses a system. The system includes a transform component that receives a first plurality of image parts in a first domain that comprise an initial size. The system includes a transform component that transforms the first plurality of image parts to obtain a second plurality of image parts in a second domain different from the first domain. The system includes a transform component that transforms a plurality of image parts based on the second plurality of image parts to obtain a resultant plurality of image parts in the first domain that comprise a resultant size different from the initial size.

A further embodiment of the invention encompasses an article. The article includes a computer-readable signal-bearing medium. The article includes means in the medium for receiving a first plurality of image parts in a first domain that comprise an initial size. The article includes means in the medium for transforming the first plurality of image parts to obtain a second plurality of image parts in a second domain different from the first domain. The article includes means in the medium for transforming a plurality of image parts based on the second plurality of image parts to obtain a resultant plurality of image parts in the first domain that comprise a resultant size different from the initial size.

An additional embodiment of the invention encompasses a method. First and second image parts are received. Sparse matrix multiplication is applied to each of the first and second image parts.

Yet another embodiment of the invention encompasses a system. The system includes a transform component that receives first and second image parts. The system includes a transform component that applies sparse matrix multiplication to each of the first and second image parts.

A still further embodiment of the invention encompasses an article. The article includes a computer-readable signal-bearing medium. The article includes means in the medium for receiving first and second image parts. The article includes means in the medium for applying sparse matrix multiplication to each of the first and second image parts.

BRIEF DESCRIPTION OF THE DRAWINGS

FIG. **1** is a functional block diagram of one example of a system that includes a device in communication with a number of servers that include a transform component.

FIG. **2** is, a functional block diagram of one example of an encoder and a decoder employed by an exemplary server that includes one example of the transform component of the system of FIG. **1**.

FIG. **3** depicts exemplary logic that is employed by one example of the transform component of the system of FIG. **1**, for decreasing the size of a one-dimensional image by a preselected factor.

FIG. **4** depicts exemplary logic that is employed by one example of the transform component of the system of FIG. **1**, for decreasing the size of a one-dimensional image by a preselected factor.

FIG. **5** depicts exemplary logic that is employed by one example of the transform component of the system of FIG. **1**, for decreasing the size of a two-dimensional image by a preselected factor.

FIG. **6** depicts exemplary logic that is employed by one example of the transform component of the system of FIG. **1**, for increasing the size of a one-dimensional image by a preselected factor.

FIG. **7** depicts exemplary logic that is employed by one example of the transform component of the system of FIG. **1**, for increasing the size of a two-dimensional image by a preselected factor.

FIG. **8** depicts exemplary logic that is employed by one example of the transform component of the system of FIG. **1**, for decreasing the size of a one-dimensional image through employment of sparse matrix multiplication.

FIG. **9** depicts exemplary logic that is employed by one example of the transform component of the system of FIG. **1**, for decreasing the size of a two-dimensional image through employment of sparse matrix multiplication.

FIG. **10** depicts exemplary logic that is employed by one example of the transform component of the system of FIG. **1**, for increasing the size of a one-dimensional image through employment of sparse matrix multiplication.

FIG. **11** depicts exemplary logic that is employed by one example of the transform component of the system of FIG. **1**, for increasing the size of a two-dimensional image through employment of sparse matrix multiplication.

FIG. **12** depicts exemplary logic that is employed by one example of the transform component of the system of FIG. **1**, for decreasing the size of an image through employment of a plurality of preselected variables of a factor.

FIG. **13** depicts exemplary logic that is employed by one example of the transform component of the system of FIG. **1**, for increasing the size of an image through employment of a plurality of preselected variables of a factor.

DETAILED DESCRIPTION

In accordance with the principles of the present invention, a first plurality of image parts in a first domain that comprise an initial size is transformed to obtain a second plurality of image parts in a second domain different from the first domain, and a plurality of image parts based on the second plurality of image parts is transformed to obtain a resultant plurality of image parts in the first domain that comprise a resultant size different from the initial size. For example, sparse matrix multiplication is applied to each of first and second image parts.

A detailed discussion of one exemplary embodiment of the invention is presented herein, for illustrative purposes.

Turning to FIG. **1**, system **100**, in one example, includes a plurality of components such as computer software and/or hardware components. For instance, a number of such components can be combined or divided. System **100** in one example employs at least one computer-readable signal-bearing medium; One example of a computer-readable signal-bearing medium for system **100** comprises a recordable data storage medium **102** such as a magnetic, optical, biological, and/or atomic data storage medium. In another example, a computer-readable signal-bearing medium for system **100** comprises a modulated carrier signal transmitted over a network comprising or coupled with system **100**, for instance, a telephone network, a local area network ("LAN"), the Internet, and/or a wireless network. An exemplary component of system **100** employs and/or comprises a series of computer instructions written in or implemented with any of a number of programming languages, as will be appreciated by those skilled in the art.

Referring to FIG. **1**, one example of system **100** includes a number of servers **104** coupled with a client such as device **106**. For instance, servers **104** include a number of transform components **107** such as transform component **109**. Servers **104** in one example comprise servers **108** and **110**. Server **110** in one example comprises a Web server. For instance, device **106** includes display **114**. Device **106** in one example comprises a Palm™ handheld computing device offered by Palm, Inc. (Corporate Headquarters 5470 Great America Parkway, Santa Clara, Calif., U.S.A. 95052; In one example, server **110** stores Web page **112** that is to be displayed on display **114** of device **106**.

Again referring to FIG. **1**, Web page **112** in one example comprises data **116** such as multimedia data that includes images and/or video in a compressed format. One example of a compressed format for data **116** includes a standard of the Joint Photographic Experts Group ("JPEG") for images. Another example of a compressed format for data **116** includes a standard of the Moving Pictures Expert Group ("MPEG") such as MPEG-1 or MPEG-2 for digital video. A further example of a compressed format for data **116** includes H.263.

In one example, data **116** is unsuitable for direct display on display **114** of device **106**, for instance, because data **116** is too large in size and/or device **106** is too limited in bandwidth. In one example in which data **116** is unsuitable for direct display on display **114** of device **106**, server **108** advantageously provides data **122** as a differently-sized version of data **116** that is suitable for display on display **114** of device **106**, as described herein.

Referring further to FIG. **1**, server **108** in STEP **118** fetches data **116** in a compressed format on server **110**. Server **108**, for instance, employs transform component **109** in STEP **120** to convert data **116** to data **122** in a compressed format and with a size suitable for display on display **114** of device **106**. For instance, data **116** comprises one size of an image, and data **122** comprises a different size of the image, as described herein. At STEP **124** in one example, server **108** communicates data **122** to device **106**, for display of data **122** on display **114** of device **106**.

Still referring to FIG. **1**, server **108** and server **110**, in one example, comprise a same server. In a further example, server **108** and server **110** comprise separate servers. In another example, server **108** resides on server **110**.

Turning to FIG. **2**, server **108** in one example comprises encoder **202** and decoder **204**. In one example, server **108** employs a spatially-scalable mode of a standard of the Moving Pictures Expert Group ("MPEG") such as the MPEG-2 video compression standard. Encoder **202** and/or decoder **204** in one example includes spatial interpolator **206**. For instance, system **200** comprises encoder **202** and decoder **204**. In one example, system **200** employs a spatially-scalable mode of a standard of the Moving Pictures Expert Group ("MPEG") such as the MPEG-2 video compression standard.

Now referring to FIGS. **2–3**, spatial interpolator **206**, for instance, employs exemplary logic **300** to change image **303** to a differently-size image **350**. For example, logic **300** serves to change size **313** of image **315** to size **337** of image **338**, as described herein. In a further example, spatial interpolator **206** comprises transform component **109** (FIG. **1**).

Spatial interpolator **206** of server **108** in FIG. **2**, in one example, employs an upsizing scheme. Server **108** of FIG. **1**, in another example, employs a downsizing scheme. For instance, referring to FIGS. **2**, **7**, and **11**, spatial interpolator **206** employs exemplary logic **300** to change size **708** of image **706** to size **704** of image **702**, or to change size **1108** of image **1106** to size **1104** of image **1102**, as described herein.

Referring to FIGS. **2**, **7**, and **11**, in one example encoder **202** employs changed-size image **350** and a motion-compensated previously-coded frame, to obtain an estimation of the original (e.g., larger) image. In one example, employment of logic **300** in spatial interpolator **206** advantageously increases the Peak Signal-to-Noise-Ratio ("PSNR"). In a further example; employment of logic **300** serves to advantageously improve estimation of the original image. In another example, employment of logic **300** in **206** advantageously obviates the previous need to use the motion-compensated previously-coded frame for prediction in coding the enhancement layer, with desirably little or no loss in quality, for instance, while advantageously avoiding a certain complexity otherwise associated with implementation of motion compensation in hardware for encoder **202**.

Referring now to FIGS. **1–3**, transform component **109** in one example of server **108** employs changed-size image **321** and a motion-compensated previously-coded frame, to obtain an estimation **331** of the original image **315**. In one example, employment of logic **300** in spatial interpolator **206** advantageously increases the Peak Signal-to-Noise-Ratio ("PSNR"). In a further example, transform component **109** serves to advantageously improve estimation of the original image. In another example, transform component **109** advantageously obviates the previous need to use the motion-compensated previously-coded frame for prediction

in coding the enhancement layer, with desirably little or no loss in quality, for instance, while advantageously avoiding a certain complexity otherwise associated with implementation of motion compensation in hardware for encoder **202**.

Referring to FIG. **3**, logic **300** in one example accesses image **301** such as one-dimensional image **302**. One-dimensional image **302**, for instance, comprises a concatenation **305** of a plurality of sets **304** of samples **306**. For instance, sets **304** of samples **306** comprise one or more preselected numbers **312** of samples **306**. An exemplary instance of preselected numbers **312** of samples **306** comprises eight samples **306**. Samples **306** are located in domain **308**. Domain **308** in one example comprises a spatial domain.

Again referring to FIG. **3**, logic **300** in one example employs STEP **310** to receive samples **306**. Logic **300** employs STEP **314** to transform samples **306** from domain **308** to domain **316**. Domain **316** is different from domain **308**. Examples of a transform that logic **300** employs include a discrete cosine transform ("DCT"), a discrete sine transform, a Fourier transform, and a Hadamard transform.

Referring still to FIG. **3**, in one example, one of domains **308** and **316** comprises a transform domain such as a discrete cosine transform ("DCT") domain, a discrete sine transform domain, a Fourier transform domain, or a Hadamard transform domain, and the other of domains **308** and **316** comprises a spatial domain, as will be understood by those skilled in the art.

Referring again to FIG. **3**, logic **300** employs STEP **318** to perform, for instance, an inverse transform. STEP **318** in one example applies an inverse (e.g., four) point discrete cosine transform **320** in domain **316** to sets **319** of (e.g., four) low-frequency coefficients **322** of samples **317** obtained in STEP **314**. For instance, STEP **318** yields sets **326** of (e.g., four) samples **324** in domain **308**. In one example, low-frequency coefficients **322** comprise coefficients that correspond to k=0 through 3 in exemplary Equation (1.2), described further below.

Further referring to FIG. **3**, logic **300**, in one example, employs STEP **328** in domain **308** to concatenate sets **326** of samples **324** obtained in STEP **318**. STEP **328** in one example yields samples **330** in domain **308**. STEP **332** applies transform **334** to samples **330**, to obtain samples **336** in domain **316**. In one example, logic **300** serves to advantageously decrease size **313** of image **315** to size **337** of image **338**, for instance, by causing size **337** of image **338** and size **313** of image **315** to comprise a ratio therebetween of two.

Those skilled in the art, from review of the discussion above of employment of logic **300** of FIG. **3** for exemplary decreasing size of a one-dimensional image and the remaining discussion herein taken in conjunction with FIGS. **3–13**, will appreciate embodiments such as employment of logic **300** of any of FIGS. **4–5**, **8–9**, and **12** for exemplary decreasing of size of an image, employment of logic **300** of any of FIGS. **6–7**, **10–11**, and **13** for exemplary increasing of size of an image, employment of logic **300** of any of FIGS. **5**, **7**, **9**, and **11–13** for exemplary changing of size of a two-dimensional image, employment of logic **300** of FIG. **12** for exemplary decreasing of size of an image by a non-integer factor and/or a factor other than a power of two, and employment of logic **300** of FIG. **13** for exemplary increasing of size of an image by a non-integer factor and/or a factor other than a power of two.

Turning to FIG. **4**, logic **300** serves to decrease size **313** of image **315** by a preselected factor **402**, for instance, a factor of two. For instance, INPUT in FIG. **4** comprises receipt of image **303** in (e.g., transform) domain **316**. STEP **328** of logic **300** of FIG. **4** in one example employs a scaling factor of $1/\sqrt{2}$ through incorporation of the scaling factor of $1/\sqrt{2}$ in inverse transform **320** of STEP **318**, as will be appreciated by those skilled in the art.

Turning to FIG. **5**, logic **300** decreases size **502** of image **504** in obtaining size **506** of image **508**. Logic **300** in one example obtains a preselected ratio of size **506** of image **508** relative to size **502** of image **504**. For instance, the ratio between size **506** and size **502** comprises a factor of two.

Still referring to FIG. **5**, logic **300** employs STEP **510**. STEP **510** in one example comprises applying an N/2×N/2 inverse transform **512** to N/2×N/2 low-frequency sub-blocks **514** of each N×N block **516**. N×N blocks **516** represent samples **518**. In one example, low-frequency sub-block **514** comprises an N/2×N/2 sub-block of N×N block **516**, for instance, that comprises transform coefficients in domain **316**. STEP **510** in one example performs an inverse transform from domain **316** to domain **308**. For instance, STEP **510** yields N/2×N/2 blocks **520** in domain **308**. STEP **522** serves to transform blocks **520** to image **508** in domain **316** through employment of an N×N transform.

Turning to FIG. **6**, logic **300** serves to obtain size **602** of image **604** that is increased relative to size **606** of image **608**. Logic **300** in one example operates on image **608** that comprises a one-dimensional image.

Turning to FIG. **7**, logic **300** in one example yields size **702** of two-dimensional image **704** that is increased relative to size **706** of two-dimensional image **708**. STEPS **710**, **712**, and **714** cause the increased size **702** directly in domain **316**. For instance, domain **316** comprises a transform domain. STEP **710** in one example comprises applying an inverse N×N transform. STEP **712** in one example comprises separation of image **716** in domain **308** into four N/2×N/2 blocks **718**. STEP **714** in one example comprises applying an N/2×N/2 transform **720** to each block **718**.

Turning to FIG. **8**, logic **300** outputs (e.g., in a transform domain) size **802** of image **804** that is decreased relative to size **806** of image **808**. For example, image **804** comprises a one-dimensional image, and image **808** comprises a one-dimensional image. In one example, logic **300** employs matrices **810** and **812** that are (e.g., relatively) sparse. For instance, matrices **810** and **812** comprise sparse matrices in which a majority of entries **816** have a value of zero. In another example, logic **300** employs matrices **810** and **812** that are very sparse. For instance, matrices **810** and **812** comprise very sparse matrices in which nearly and/or approximately seventy-five percent of entries **816** have a value of zero. Such sparseness of matrices **810** and **812**, in one example, serves to provide (e.g., tremendous) computational savings in multiplication involving matrices **810** and **812**. Additional structure of matrices **810** and **812**, in one example, serves to provide further computational savings in, for instance, an addition operation of STEP **814**, as described herein.

Turning to FIG. **9**, logic **300** employs matrices **902**, **904**, **906**, and **908** that are sparse in one example. Logic **300** serves to obtain size **914** of image **916** that is decreased relative to size **918** of image **920**. For example, image **916** comprises a two-dimensional image, and image **920** comprises a two-dimensional image. Logic **300** in one example employs transpose **910** of a matrix and transpose **912** of a matrix. For instance, logic **300** employs matrices **902**, **904**, **906**, and **908** for pre-multiplication, and logic **300** employs transpose **910** of a matrix and transpose **912** of a matrix for post-multiplication, as will be appreciated by those skilled in the art.

Referring to FIG. **10**, logic **300** in one example results in size **1002** of image **1004** such as a one-dimensional image, that is increased relative to size **1006** of image **1008** such as a one-dimensional image. Logic **300** in one example employs transpose **1010** of a very sparse matrix and transpose **1012** of a very sparse matrix.

Referring to FIG. **11**, logic **300** obtains size **1102** of image **1104** such as a two-dimensional image, that is increased relative to size **1106** of image **1108** such as a two-dimensional image.

Referring now to FIGS. **12–13**, logic **300** changes size **1202** of image **1204** in obtaining size **1206** of image **1208**. Logic **300** in one example obtains a preselected ratio of size **1206** of image **1208** relative to size **1202** of image **1204**. For instance, the ratio between size **1206** and size **1202** comprises a factor of two. In another example, the ratio between size **1206** and size **1202** excludes a factor of two. In a further example, the ratio between size **1206** and size **1202** comprises a non-integer ratio.

Referring to FIG. **12**, logic **300** in one example serves to obtain a relative decrease in size of an image by a factor of (M1×M2)/(N1×N2). For instance, logic **300** serves to decrease image height by a factor of M1/N1 and decrease image width by a factor M2/N2. So, in one example, selection of values for variables M1, M2, N1, and N2 of the factor (M1×M2)/(N1×N2) provides increased control and/or tunability for system **100** (FIG. **1**).

Referring to FIG. **13**, logic **300** in one example serves to increase size of an image by a factor of (M1×M2)/(N1×N2). For instance, logic **300** serves to increase image height by a factor of M1/N1 and increase image width by a factor of M2/N2. So, in one example, selection of values for variables M1, M2, N1, and N2 of the factor (M1×M2)/(N1×N2) provides increased control and/or tunability for system **100** (FIG. **1**).

For explanatory purposes, a detailed technical description is now presented.

$T^{(N)}$ comprises an N×N discrete cosine transform matrix. In one example, $T^{(N)}=\{t(k,n)\}$, where t(k,n) denotes the matrix entry in the k-th row and n-th column, according to the following exemplary Equation (1.1).

$$t(n,k) = 1/\sqrt{N};\ k = 0,\ 0 \le n \le N-1 \qquad (1.1)$$
$$= \sqrt{\frac{2}{N}}\cos\frac{\pi(2n+1)k}{2N};\ 1 \le k \le N-1;\ 0 \le n \le N-1$$
$$0 \le n \le N-1$$

In addition, the one-dimensional DCT of a sequence u(n), 0≦n≦N−1, is given by v(k), 0≦k≦N−1, which is defined in the following exemplary Equation (1.2).

$$v(k) = \sum_{n=0}^{N-1} t(k,n)u(n);\ 0 \le k \le N-1 \qquad (1.2)$$

One example employs vectors u and v to denote the sequences u(n) and v(k), and represent Equation (1.1) by the following exemplary Equation (1.3).

$$v = T^{(N)}u \qquad (1.3)$$

Assume that a matrix A is given. The transpose A' of the matrix A in one example comprises another matrix whose i-th column is the same as the i-th row of A. For example, the (j,i)th entry of A' comprises the (i,j)th entry of A.

The DCT in one example is a unitary transform. So, taking the transpose of matrix $T^{(N)}$ in one example results in an inverse DCT matrix $T^{(N)'}$. Given vector v of Equation (1.3), one can, for instance, obtain vector u through the following exemplary Equation (1.4).

$$u = T^{(N)'}v \qquad (1.4)$$

As noted above with reference to Equation (1.1), $T^{(N)}$ comprises the N×N DCT matrix. In another example, $T^{(N/2)}$ comprises an N/2×N/2 DCT matrix.

An N1×N2 matrix comprises N1 rows each of width N2. One example of logic **300** obtains the N1×N2 DCT of an N1×N2 two-dimensional signal as follows. Logic **300**, for instance, first employs the matrix $T^{(N2)}$ to take the N2-point DCT of each row of the signal to obtain data. Logic **300**, for instance, second applies an N1-point DCT to each column of this data through employment of the matrix $T^{(N1)}$.

An exemplary definition of the matrices T_L, T_R, T_s, C, D, E, and F, is now presented.

In one example, "T_L" denotes a matrix that comprises the N/2 leftmost columns of the matrix $T^{(N)}$. In a further example, "T_R" denotes a matrix that comprises the N/2 rightmost columns of the matrix $T^{(N)}$. So, in one example, $T^{(N)}=[T_L T_R]$. Further, in one example, each of matrices T_L and T_R comprises a size of N/2×N/2. One example assumes that N is divisible by two. In a further example, "T_s" denote a matrix $T^{(N/2)}$. So, in one example, the following exemplary Equations (1.5, 1.6, 1.7, and 1.8) result.

$$C = \frac{1}{\sqrt{2}}\frac{1}{2}((T_L T_s^t) + (T_R T_s^t)) \qquad (1.5)$$

$$D = \frac{1}{\sqrt{2}}\frac{1}{2}((T_L T_s^t) - (T_R T_s^t)) \qquad (1.6)$$

$$E = \sqrt{2}\frac{1}{2}((T_L T_s^t) + (T_R T_s^t)) \qquad (1.7)$$

$$F = \sqrt{2}\frac{1}{2}((T_L T_s^t) - (T_R T_s^t)) \qquad (1.8)$$

In one example, the matrices T_1. T_s' and $T_R T_s$' are sparse, since the matrices $T_L T_s$' and $T_R T_s$' have nearly fifty percent of their entries as zeros. In a further example, the matrices C, D, E, and F are very sparse, since the matrices C, D, E, and F have nearly seventy-five percent of their entries as zeros. Similar conclusions hold for other transforms that satisfy certain orthogonality and symmetry properties like the DCT in one example when other of the matrices herein are defined in a like manner (e.g., by appropriately partitioning $T^{(N)}$ into T_L and T_R). Examples of such transforms include the Fourier transform and the Hadamard transform.

An illustrative example of the matrix C in Equation (1.5) for the case of N=8 follows below.

0.5000	0	0	0.0000
0.0000	0.2079	0.0000	0.0114
0	0	0	0
0.0000	0.3955	0.0000	0.0488
0	0	0.5000	0
0.0000	0.1762	0.0000	0.2452
0	0	0	0
0	0.1389	0	0.4329

In the above example, matrix C has only ten non-zero entries out of a total of 8*4=32 entries. So, nearly seventy-five percent of the elements of matrix C are zeros.

For illustrative purposes, now is presented a detailed discussion of decreasing of image size in the compressed domain.

One example serves to decrease the size of an image in a situation where the "original" (e.g., input) image is given in a compressed domain with an expectation that the output image will be provided in the compressed domain. The compressed domain in one example corresponds to an N×N block-DCT domain. For instance, the Joint Photographic Experts Group ("JPEG") still image compression standard and the Moving Picture Experts Group ("MPEG") video compression standards MPEG-1 and MPEG-2, employ an 8×8 DCT.

In one example, referring to FIGS. **3–4**, an input to logic **300** comprises a one-dimensional image or a one-dimensional signal. For illustrative purposes, FIG. **3** specifically depicts a case of N=8, such that the signal is given in terms of 8×8 block DCT coefficients. Those skilled in the art will understand treatment of any general N, such as is represented in FIG. **4**, from the discussion herein of the exemplary case of N=8 that is represented in FIG. **3**.

Referring to FIG. **3**, an input to logic **300** at STEP **372** in one example comprises image **315**. For instance, image **315** comprises an N×N DCT domain representation of a spatial domain signal that comprises image **301**. As preparation in one example, STEP **370** splits the spatial domain signal into sets **304** of samples **306** of size. N. FIG. **3** depicts one example of two adjacent sets **304** of samples **306** each of size N. Logic **300** of FIG. **3** denotes these samples **306** of size N as b_1 and b_2. Logic **300** of FIG. **3** in one example treats all vectors as column vectors. Logic **300** of FIG. **3** in one example denotes row vectors as transposes of column vectors. Logic **300** of FIG. **3** in one example applies the N×N DCT transform to each of b_1 and b_2 to obtain B_1 and B_2, respectively. So, in one example, $B_1=T^{(N)}\ b_1$ and $B_2=T^{(N)}\ b_2$. The input image **315** in one example comprises N×N block DCT coefficients. In one example, B_1 and B_2 represent the N×N block DCT coefficients for two instances of the size N blocks of image **301**. B_1 and B_2 in one example comprise image **315** in domain **316**, for instance, the N×N DCT domain. For example, sets **319** of low-frequency coefficients **322** of samples **317** comprise N/2 low-frequency samples of B_1 and B_2.

Again referring to FIG. **3**, the N/2 low-frequency samples of B_1 and B_2, in one example, comprise samples that correspond to k=0 through N/2−1 of Equation (1.2), above.

In another example, the low-frequency samples correspond to a different set of values for the k indices, such as for an instance of logic **300** that employs a transform other than DCT.

For explanatory purposes, this discussion refers to a hatted symbol of logic **300** represented in FIGS. **3–13** by employing an "h" with the symbol. For example, in this discussion "Bh_1" corresponds to "B_1" of logic **300** and "bh_1" corresponds to "b_1" of logic **300**.

Referring further to FIG. **3**, logic **300** in one example employs the N/2 low-frequency samples of each of B_1 and B_2 to obtain Bh_1 and Bh_2, respectively.

Still referring to FIG. **3**, logic **300** in one example applies the N/2×N/2 inverse DCT transform using the transpose of matrix $T^{(N/2)}$. Logic **300** employs, for instance, Equation (1.4), above. For example, logic **300** substitutes $T^{(N/2)}$ for T of Equation (1.4). Logic **300** in one example applies the N/2×N/2 inverse DCT transform to each of Bh_1 and Bh_2 to obtain bh_1 and bh_2, respectively, as sets **326** of samples **324**, STEP **318**. In one example, bh_1 and bh_2 represent downsized versions of b_1 and b_2, respectively, in the spatial domain, as one example of domain **308**. In a further example, logic **300** concatenates bh_1 and bh_2 to obtain $bh=(bh_1\ bh_2)$, as one example of samples **330**. For example, bh is in the spatial domain, as one example of domain **308**. For instance, bh represents a downsized version of $(b_1\ b_2)$ that comprises one example of image **301** as one-dimensional image **302**. Logic **300** in one example applies an N×N transform (e.g., a "forward" transform) to bh to obtain a (e.g., final) output block Bh, as one example of N samples **336** in domain **316**, for instance, the transform domain. So, Bh in one example represents a downsized version of the original signal in the transform domain.

The discussion above leads to a number of exemplary equations, including, for example, the following exemplary Equation (2.1.1).

$$\begin{aligned} Bh = T^{(N)}(bh) = T^{(N)}\left[\, bh_1^t \quad bh_2^t \,\right]^t = [\, T_L \quad T_R \,][\, bh_1^t \quad bh_2^t \,]^t \\ = [\, T_L \quad T_R \,][\, (T_s^t Bh_1)^t \quad T_s^t Bh_2)^t \,]^t \\ = (\, T_L \quad T_s^t)Bh_1 + (\, T_R \quad T_s^t)Bh_2 \end{aligned} \tag{2.1.1}$$

From the properties of the DCT matrices, it can be shown that $T_L\ T_s^t$ and $T_R\ T_s^t$ are sparse, since, for example, nearly fifty percent of the entries of each of these matrices are zero. So, in one example, Equation. (2.1.1) allows advantageously fast computations.

Another example allows an advantageous further increase in computational speed.

In one example, the matrices $T_L\ T_s^t$ and $T_R\ T_s^t$ have identical entries except for a possible sign change. Specifically, if i+j divided by two yields an integer result, then the (i,j)th element of $T_L\ T_s^t$ is the same as the (i,j)th element of $T_R T_s^t$. Otherwise, if i+j divided by two yields a non-integer result, then the (i,j)th element of $T_L T_s^t$ is opposite in sign to the (i,j)th element of $T_R\ T_s^t$. So, one example yields even greater sparseness of matrices C, D, E, and F of Equations (1.5)–(1.8), since about 75% of the entries of matrices C, D, E, and F in the example are zeros. The example employs a factor of √2 in defining the matrices C, D, E, and F to account for different sizes of the DCTs. Solving for $T_L\ T_s^t$ and $T_R\ T_t^t$ from Equations (1.5) and (1.6) and substituting the result in Equation (2.1.1) yields the following exemplary Equation (2.1.2).

$$Bh=C(Bh_1+Bh_2)+D(Bh_1-Bh_2) \tag{2.1.2}$$

Logic **300** of FIG. **8** in one example implements Equation (2.1.2). For example, logic **300** outputs Bh as image **804** that has size **802**. Logic **300** in one example serves to decrease size **802** of image **804** relative to size **806** of image **808** that comprises input to logic **300**. In a further example, implementation of Equation (2.1.2) in logic **300** of FIG. **8** allows advantageously fast computation(s) in execution of logic **300**. The following reasons in one example contribute to an increased-computational speed for logic **300**.

As a first exemplary reason, referring to FIG. **8**, matrices **810** and **812** are (e.g., very) sparse. So, employment of matrices **810** and **812** in logic **300** makes matrix multiplication of Equation (2.1.2) computationally inexpensive. Sparseness in one example of matrices **810** and **812** results from numerous occurrences of zero for entries of matrices **810** and **812**. So, logic **300** desirably need not perform a significant number of multiplications that would otherwise be performed absent the numerous occurrences of zero in matrices **810** and **812**, as will be appreciated by those skilled in the art.

As a second exemplary reason, referring again to FIG. **8**, matrices **810** and **812** in one example comprise a particular

structure that guarantees that some of the operands of an addition operation in STEP **814**, are zero. So, logic **300** in one example comprises an advantageously-decreased number of addition operations.

FIG. **5** illustrates one example of employment of logic **300** with two-dimensional images such, as images **504** and **508**. For instance, image **504** comprises N×N transform coefficients. Logic **300** in one example receives image **504** as input and produces image **508** as output. In one example, logic **300** divides image **504** into N×N blocks **516**.

As depicted in FIG. **5** for illustrative purposes, logic **300** in one example divides image **504** into four (e.g., adjacent) instances of N×N block **516**. In addition, logic **300** in one example employs the four instances of N×N block **516** to obtain a single instance of N×N block **530** as image **508**, for example, as output Bh of logic **300**. In one example, logic **300** changes the four instances of N×N block **516** to the single instance of N×N block **530** to obtain a reduction in size by a factor of two in each dimension. In one example, low-frequency sub-blocks **514** each comprise size N/2×N/2 that correspond to k=0 through N/2−1 in Equation (1.2), for instance, in vertical and horizontal directions. STEP **510** applies an inverse N/2×N/2 transform to each N×N block **516** to obtain four N/2×N/2 blocks **520**, for example, bh_1, bh_2, bh_3, bh_4, in (e.g., spatial) domain **308**. In one example, the four N/2×N/2 blocks **520** represent a downsized version of original image **504**. STEP **521** in one example concatenates the four N/2×N/2 blocks **520** to obtain a single instance bh of N×N block **528**. STEP **522** applies an N×N transform to the single instance bh of N×N block **528** to obtain the output instance Bh of N×N block **530** as image **508** in (e.g., transform) domain **316**.

An exemplary determination of mathematical equations corresponding to the discussion above, plus a determination that the resultant equations can be manipulated to involve matrix multiplications with only sparse matrices, allows one to obtain a computationally efficient way to implement logic **300**. In one example, application of the DCT to an N×N (e.g., two-dimensional) block corresponds to pre- and post-multiplication by the matrix T. So, one example describes the operations above by the following exemplary mathematically description.

$$\begin{aligned} Bh = T^{(N)}\, bh\, T^t &= [\,T_L \quad T_R\,]\begin{vmatrix} bh_1 & bh_2 \\ bh_3 & bh_4 \end{vmatrix}\begin{vmatrix} |T_L^t| \\ |T_R^t| \end{vmatrix} \\ &= [\,T_L \quad T_R\,]\begin{vmatrix} T_s^t Bh_1 T_s & T_s^t Bh_2 T_s \\ T_s^t Bh_3 T_s & T_s^t Bh_4 T_s \end{vmatrix}\begin{vmatrix} |T_L^t| \\ |T_R^t| \end{vmatrix} \\ &= ((\,T_L \quad T_s^t)Bh_1 + (\,T_R \quad T_s^t)Bh_3)(\,T_R \quad T_s^t)^t + \\ &\quad ((\,T_L \quad T_s^t)Bh_2 + (\,T_R \quad T_s^t)Bh_4)(\,T_R \quad T_s^t)^t \end{aligned} \tag{2.1.3}$$

In one example, $(T_L\ T_s^t)$ and $(T_R\ T_s^t)$ are sparse. So, exemplary Equation (2.1.3) presents computationally fast calculations for logic **300** that operates on, for instance, two-dimensional images. One example precomputes the matrices $(T_L\ T_s^t)$ and $(T_R\ T_s^t)$. One example replaces $(T_L\ T_s^t)$ and $(T_R\ T_s^t)$ by the matrices C and D defined in Equations (1.5) and (1.6) for substitution in Equation (2.1.3), to obtain a result. Through rearrangement of terms of this result, one example obtains the following exemplary Equations (2.1.4), (2.1.5), and (2.1.6).

$$Bh=(X+Y)C^t+(X-Y)D^t \tag{2.1.4}$$

where

$$X=C(Bh_1+Bh_3)+D(Bh_1-Bh_3) \tag{2.1.5}$$

and

$$Y=C(Bh_2+Bh_4)+D(Bh_2-Bh_4) \tag{2.1.6}$$

In one example, a striking similarity exists between Equation (2.1.2), for an illustrative one-dimensional case, and each of exemplary Equations (2.1.4), (2.1.5), and (2.1.6), for an illustrative two-dimensional case. Equations (2.1.4), (2.1.5), and (2.1.6) in one example represent a computationally (e.g., very) fast way to implement logic **300**, such as in FIG. **9**.

Referring to FIG. **9**, a number of (e.g., all) instances of (e.g., addition) operation component **950** have some of their operands guaranteed to be zeros, and therefore advantageously avoid a need to perform a number of additions operations.

Again referring to FIG. **9**, exemplary computations **952** and **954** correspond to exemplary logic subportions **956** and **958**, respectively, of logic **300**. In one example, N=8. In a further example, "32A" represents thirty-two addition operations and "64M" represents sixty-four multiplication operations. For instance, if N=8 then an exemplary result of computations **952** and **954** comprises 320/(8*8)=1.25 addition operations and 1.25 multiplication operations, for example, per pixel of the original image (e.g., image **920**).

In one example, a similarity between Equation (2.1.2), for the one-dimensional case, and each of Equations (2.1.4), (2.1.5), and (2.1.6), for the two-dimensional case, advantageously allows performance of operations in a separable fashion. For instance, logic **300** that is employable with an exemplary two-dimensional case, performs "one-dimensional" computations along columns to get X and Y, and (e.g., subsequently) performs "one-dimensional" computations along rows of X and Y to get Bh, for example, as output image **916**. Such performance of "one-dimensional" computations for a two-dimensional case, in one example, allows an advantageously-increased computational speed of logic **300**.

Those skilled in the art will appreciate that additional ways exist for writing Equation (2.1.3) in a form similar to Equations (2.1.4), (2.1.5), and (2.1.6), for instance, to comprise the same number of computations as Equations (2.1.4), (2.1.5), and (2.1.6). For instance, another example of Equation (2.1.5) employs Bh_1 and Bh_2, and a further example employs Bh_3 and Bh_4 in Equation (2.1.6), such as where logic **300** initially performs processing along rows and subsequently performs processing along columns.

An exemplary description of logic **300** that implements Equations (2.1.3)–(2.1.6) comprises:

{
Receiving a plurality of image parts in a transform domain.
Applying simple linear processing on the low frequency parts of each image part.
Multiplying (either pre or post) each image part thus obtained by sparse matrices.
Applying simple linear processing to the parts thus obtained.
Multiplying (either post or pre) each image part thus obtained by sparse matrices (one example excludes this multiplication for an illustrative one-dimensional case).
Applying simple linear processing on the parts thus obtained to get a final set of image parts representing the final image in a transform domain.
}

"Simple linear processing" in one example comprises an identity operation in which output equals input, such as for

Equation (2.1.3), and in another example comprises additions and/or subtractions, such as for Equations (2.1.4)–(2.1.6).

One or more other examples employ analogous definitions of matrices such as matrices T, T_L, C, D, for transforms other than the DCT. In one example, a sparseness of matrices such as matrices C and D, depends only on orthogonality and symmetry properties of the N×N DCT matrix in relation to the N/2×N/2 DCT matrix. So, in one example, the sparseness property holds for other transforms, for example, transforms having properties such as properties of the Fourier transform and the Hadamard transform. One example obtains computational savings with employment of other such transforms.

One example employs the basis function of a selected transform that is employed with a particular instance of logic **300**, to construct the matrices C and D for the particular instance of logic **300**.

Referring to FIG. **12**, one example of logic **300** reduces the size of an image by any selected power of two. In one example, logic **300** changes size of an image by a power of two through employment of a direct implementation. In another example, repeated application of a certain instance of logic **300** that serves to change the size of an image by a factor of two, serves in another instance of logic **300** to reduce the size of the image by additional factors of two.

Referring to FIG. **7**, logic **300** in one example serves to increase the size of an image in the compressed domain. For example, one can consider an instance of logic **300** that serves to increase the size of an image, to comprise an inverse of an instance of logic **300** that serves to decrease the size of an image. One example of logic **300** comprises first and second independent implementations. The first implementation in one example performs the decreasing of the image size. The second implementation in one example performs the increasing of the image size.

Again referring to FIG. **7**, logic **300** in one example receives N×N transform coefficients as an input image **706**, and outputs an enlarged image in the same format, as image **702**.

Referring still to FIG. **7**, logic **300** in one example receives as input image **706** an N×N transform domain representation of a two-dimensional image. Instance Bh of image **706** comprises an exemplary N×N transform domain block. One example obtains four N×N transform domain blocks out of this N×N transform domain block, to effect a size change (e.g., increase) by a factor of two in each dimension.

Further referring to FIG. **7**, STEP **710** in one example applies an N×N inverse transform to Bh to obtain an N×N block as image **716** in (e.g., spatial) domain **308**. STEP **712** in one example splits the N×N block into four N/2×N/2 blocks **718**. STEP **714** in one example applies an N/2×N/2 (e.g., discrete cosine) transform to each block **718**, to obtain four N/2×N/2 blocks Bh_1, Bh_2, Bh_3, and Bh_4. Each of blocks Bh_1, Bh_2, Bh_3, and Bh_4 in one example comprises a low-frequency sub-block of a corresponding N×N block. STEP **714** further sets to zero the high-frequency coefficients of each of these N×N blocks. Image **704** in one example comprises four such blocks as the desired enlarged version of the block Bh in the compressed (e.g., transform) domain.

For illustrative purposes, the following exemplary description is presented.

Since $T^t\,T^{(N)}=I$ (N×N identity matrix) and $T^{(N)}=[T_L\ T_R]$ one obtains:

$$T_L{}^tT_L=T_R{}^tT_R=I_{N/2} \text{ and } T_L{}^tT_R=T_R{}^tT_L=O_{N/2}$$

where $I_{N/2}$ and $O_{N/2}$ denote the N/2×N/2 identity and zero matrix, respectively. So:

$$I_{N/2}=T_s(T_L{}^tT_L)T_s{}^t=(T_LT_s{}^t)^t(T_LT_s{}^t)$$

Similarly:

$$(T_LT_s{}^t)^t(T_LT_s{}^t)=I_{N/2}=(T_RT_s{}^t)^t(T_RT_s{}^t) \quad (2.1.7)$$

$$(T_LT_s{}^t)^t(T_RT_s{}^t)=O_{N/2}=(T_RT_s{}^t)^t(T_LT_s{}^t) \quad (2.1.8)$$

So, one particular example of logic **300** that increases the size of an image comprises exactly the reverse logic of a certain example of logic **300** that decreases the size of an image. Employment of Equation (2.1.3) in conjunction with orthogonality properties of the matrices ($T_R\ T_s{}^t$) and ($T_L\ T_s{}^t$) in exemplary Equations (2.1.7) and (2.1.8), allows a determination of the following exemplary Equations (2.1.9)–(2.1.12).

$$Bh_1=(T_LT_s{}^t)^tBh(T_LT_s{}^t) \quad (2.1.9)$$

$$Bh_2=(T_LT_s{}^t)^tBh(T_RT_s{}^t) \quad (2.1.10)$$

$$Bh_3=(T_RT_s{}^t)^tBh(T_LT_s{}^t) \quad (2.1.11)$$

$$Bh_4=(T_RT_s{}^t)^tBh(T_RT_s{}^t) \quad (2.1.12)$$

Equations (2.1.9)–(2.1.12) in one example of logic **300** of FIG. **7**, allow a determination of the N/2×N/2 low-frequency sub-blocks Bh_1, Bh_2, Bh_3, and Bh_4. One example of logic **300** receives input in the form of image block Bh in the transform domain and obtains output in the form of the N/2×N/2 low-frequency sub-blocks Bh_1, Bh_2, Bh_3, and Bh_4 in the transform domain.

One example of logic **300** implements Equations (2.1.9)–(2.1.12) to obtain advantageously fast computation through employment of (e.g., very) sparse embodiments of matrices ($T_L\ T_s{}^t$) and ($T_R\ T_s{}^t$).

Another example of logic **300** employs ($T_L\ T_s{}^t$) and ($T_R\ T_s{}^t$) per the definition of matrices E and F in Equations (1.7)–(1.8) for substitution in Equations (2.1.9)–(2.1.12) to obtain the following exemplary Equations (2.1.13)–(2.1.17).

$$Bh_1=(P+Q)+(R+S) \quad (2.1.13)$$

$$Bh_2=(P+Q)+(R-S) \quad (2.1.14)$$

$$Bh_3=(P+Q)-(R+S) \quad (2.1.15)$$

$$Bh_4=(P+Q)-(R-S) \quad (2.1.16)$$

where:

$$P=(E^tBh)E;Q=(E^tBh)F;R=(F^tBh)E;S=(F^tBh)F. \quad (2.1.17)$$

Equations (2.1.13)–(2.1.16) account for a factor, for example, a factor of two due to the different sizes of the DCTs, in the definitions of E and F.

In one example, exemplary bracketing in Equations (2.1.13)–(2.1.17) conveys an illustrative ordering of computations. Equations (2.1.13)–(2.1.17) in one example represent a (e.g., much) faster way to carry out the computations in Equations (2.1.9)–(2.1.12), since in one example nearly seventy-five percent of the entries in matrices E and F have the value of zero. Equations (2.1.13)–(2.1.17) in one example arrange the multiplications and additions in a hierarchical manner, to advantageously obtain a further increase in computational speed.

For illustrative purposes, FIG. **11** depicts such an implementation of logic **300**. Exemplary computations **1152** and

1154 correspond to exemplary logic subportions **1156** and **1158**, respectively, of logic **300**. In one example, N=8. In a further example, "96A" represents ninety-six addition operations and "160M" represents one hundred sixty multiplication operations. For instance, if N=8 then an exemplary result of computations **1152** and **1154** comprises 320/(8*8)=1.25 addition operations and 1.25 multiplication operations, for example, per pixel of the upsized image.

In one example, a similarity between logic **300** of FIG. **10**, for the one-dimensional case, and logic **300** of FIG. **11**, for the two-dimensional case, advantageously allows an interpretation of Equations (2.1.13)–(2.1.17) as corresponding to carrying out one-dimensional operations along the columns of Bh and (e.g., subsequently) along the rows of Bh.

One example employs ways to write Equations (2.1.9)–(2.1.12) in a form similar to Equations (2.1.14)–(2.1.17), for example, while involving the same number of computations. One example regroups portions of Equation (2.1.17) to carry out computations in the following exemplary Equation (2.1.18).

$$P=E^t(BhE);Q=E^t(BhF);R=F^t(BhE);S=F^t(BhF). \quad (2.1.18)$$

In view of Equations (2.1.9)–(2.1.18), one example describes logic **300** for upsizing as follows.

{
Receiving a plurality of image parts in a transform domain.
Multiplying (pre or post) each image part by sparse matrices.
Multiplying (post or pre) each of the image parts thus obtained by sparse matrices (one example excludes this multiplication for an illustrative one-dimensional case).
Applying simple linear processing on the image parts thus obtained. The image parts thus obtained are made the low-frequency parts of the corresponding image parts in the final image which is also in the transform domain.
}

"Simple linear processing" in one example comprises an identity operation in which output equals input such as for Equations (2.1.9)–(2.1.12), and in another example comprises additions and/or subtractions of two or more image parts to obtain a new set of image parts. In a further example, "simple linear processing" comprises the following exemplary operation that corresponds to Equations (2.1.13)–(2.1.18). In one example, the input comprises P, Q, R, and S, and the output comprises Bh1, Bh2, Bh3, and Bh4.

$PQ1=P+Q;$

$PQ2=P-Q;$

$RS1=R+S;$

$RS2=R-S;$

$Bh1=PQ1+RS1;$

$Bh2=PQ2+RS2;$

$Bh3=PQ1-RS1;$

$Bh4=PQ2-RS2;$

One or more other examples employ analogous definitions of matrices, such as matrices T, T_L, E, F, for transforms other than the DCT. In one example, the sparseness of matrices such as matrices E and F depends only on orthogonality and symmetry properties of the N×N DCT matrix in relation to the N/2×N/2 DCT matrix. So, in one example, the sparseness property holds for other transforms, for example, transforms having properties such as properties of the Fourier transform and the Hadamard transform. One example obtains computational savings with employment of such other transforms.

One example employs the basis function of a selected transform that is employed with a particular instance of logic **300**, to construct the matrices E and F for the particular instance of logic **300**.

Referring to FIG. **13**, one example of logic **300** increases the size of an image by any selected power of two. In one example, logic **300** changes a size of an image by a power of two through employment of a direct implementation. In another example, repeated application of a certain instance of logic **300** that serves to change the size of an image by a factor of two, serves in another instance of logic **300** to increase the size of the image by additional factors of two.

Logic **300** in one example implements an upsizing scheme irrespective of whether or not the originally input image, resulted from an implementation in logic **300** of a downsizing scheme.

Exemplary additional details for one example of logic **300** are provided in Rakesh Dugad and Narendra Ahuja, "A Fast Scheme for Altering Resolution in the Compressed Domain" (Proceedings 1999 IEEE Computer Society Conference on Computer Vision and Pattern Recognition, Cat. No PR00149, Jun. 23–25, 1999, Fort Collins, Colo., USA, IEEE Comput. Soc. Part Vol. 1, 1999, pp. 213–18 Vol. 1, Los Alamitos, Calif., USA).

The flow diagrams depicted herein are just exemplary. There may be many variations to these diagrams or the steps (or operations) described therein without departing from the spirit of the invention. For instance, the steps may be performed in a differing order, or steps may be added, deleted or modified. All these variations are considered a part of the claimed invention.

Although preferred embodiments have been depicted and described in detail herein, it will be apparent to those skilled in the relevant art that various modifications, additions, substitutions and the like can be made without departing from the spirit of the invention and these are therefore considered to be within the scope of the invention as defined in the following claims.

What is claimed is:

1. A method, comprising the steps of:

receiving first and second image parts; and

applying sparse matrix multiplication to each of the first and second image parts through utilization of matrices represented by $k1\cdot((T_L T^t_s)+(T_R T^t_s))$ and $k2\cdot((T_L T^t_s)-(T_R T^t_s))$, wherein superscript t denotes transpose of a matrix, k1 and k2 are scalar constants T_L and T_R are N/2 leftmost and N/2 rightmost columns respectively of an N×N non-identity matrix $T=[T_L T^R]$ such that $T T^t$ is an identity matrix and T_s is an N/2×N/2 non-identity matrix such that $T_s T^t_s$ is an identity matrix.

2. The method of claim **1**, wherein the matrices represented by $k1\cdot((T_L t^t_s)+(T_R T^t_s))$ and $k2\cdot((T_t T^t_s)-T_R T^t_s))$ each include a majority of entries with a value of zero.

3. The method of claim **1**, wherein the step of receiving the first and second image parts comprises the step of receiving a plurality of image parts that comprise an initial size; and wherein the step of applying sparse matrix multiplication to each of the first and second image parts comprises the step of applying sparse matrix multiplication to each image part of the plurality of image parts to obtain a resultant plurality of image parts that comprise a resultant size different from the initial size.

4. The method of claim 3, wherein the step of applying sparse matrix multiplication to each image part of the plurality of image parts comprises the step of selecting the resultant size and the initial size to comprise a ratio therebetween that includes a factor of two.

5. The method of claim 1, wherein the matrix T is one of a discrete cosine transform (DCT) matrix, a discrete sine transform matrix, a Fourier transform matrix, or a Hadamard transform matrix of size N×N, and the matrix T_s is the corresponding transform matrix of size N/2×N/2.

6. The method of claim 1, wherein the step of receiving the first and second image parts comprises the step of receiving a first plurality of image parts, wherein the step of applying sparse matrix multiplication to each of the first and second image parts comprises the step of applying sparse matrix multiplication to each image part of the first plurality of image parts to obtain a second plurality of image parts, and further comprising the step of applying sparse matrix multiplication to each image part of the second plurality of image parts.

7. The method of claim 6, wherein the step of applying sparse matrix multiplication to each image part of the second plurality of image parts comprises the step of applying sparse matrix multiplication to each image part of the second plurality of image parts to obtain a third plurality of image parts, and further comprising the step of applying simple linear processing to the third plurality of image parts to obtain low-frequency image parts in a transform domain.

8. The method of claim 7, wherein the step of receiving the first and second image parts comprises the step of receiving a plurality of image parts that comprise an initial image length and an initial image height; and

wherein the step of applying sparse matrix multiplication to each of the first and second image parts comprises the step applying sparse matrix multiplication to each image part of the plurality of image parts to obtain a resultant plurality of image parts that comprise a resultant image length and a resultant image height, wherein the resultant image length and the initial image length comprise a ratio therebetween that includes a factor of two, wherein the resultant image height and the initial image height comprise a ratio therebetween that includes a factor of two.

9. The method of claim 1, wherein the step of receiving the first and second image parts comprises the steps of:

receiving a first plurality of image parts in a transform domain that each comprise a low-frequency portion; and

applying simple linear processing to the low-frequency portion of each image part of the first plurality of image parts to obtain a second plurality of image parts;

wherein the step of applying sparse matrix multiplication to each of the first and second image parts comprises the step of applying sparse matrix multiplication to each image part of the second plurality of image parts to obtain a third plurality of image parts, and further comprising the step of applying simple linear processing to each image part of the third plurality of image parts to obtain a resultant image in the transform domain.

10. The method of claim 9, wherein the step of receiving the first and second image parts comprises the step of receiving a plurality of image parts that comprise an initial image length and an initial image height; and

wherein the step of applying sparse matrix multiplication to each of the first and second image parts comprises the step applying sparse matrix multiplication to each image part of the plurality of image parts to obtain a resultant plurality of image parts that comprise a resultant image length and a resultant image height, wherein the initial image length and the resultant image length comprise a ratio therebetween that includes a factor of two, wherein the initial image height and the resultant image height comprise a ratio therebetween that includes a factor of two.

11. The method of claim 1, wherein k1 and k2 each equal

$$\frac{1}{\sqrt{2}\cdot 2}.$$

12. The method of claim 1, wherein k1 and k2 each equal

$$\frac{\sqrt{2}}{2}.$$

13. A method, comprising the steps of:

receiving first and second image parts through receiving a first plurality of image parts,

applying sparse matrix multiplication to each of the first and second image parts through applying sparse matrix multiplication to each image part of the first plurality of image parts to obtain a second plurality of image parts;

applying sparse matrix multiplication to each image part of the second plurality of image parts to obtain a third plurality of image parts; and

applying simple linear processing to the third plurality of image parts to obtain low-frequency image parts in a transform domain and obtaining a value of zero for high-frequency image parts in the transform domain.

14. A system, comprising:

a transform component that receives first and second image parts; and

a transform component that applies sparse matrix multiplication to each of the first and second image parts through utilization of matricies represented by $k1\cdot((T_L T^t_s)+(T_R T^t_s))$ and $k2\cdot((T_L T^t_s)-(T_R T^t_s))$, wherein superscript t denotes transpose of a matrix, k1 and k2 are scalar constants, T_L and T_R are N/2 leftmost and N/2 rightmost columns respectively of an N×N non-identity matrix $T=[T_L T_R]$ such that $T T^t$ is an identity matrix and T_s is an N/2×N/2 non-identity matrix such that $T_s T^t_s$ is an identity matrix.

15. The system of claim 14, wherein the matrices represented by $k1\cdot((T_L T^t s)+(T_R T^t_s))$ and $k2\cdot((T_L T^t_s)-(T_R T^t_s))$ each include a majority of entries with a value of zero.

16. The system of claim 14, wherein the transform component that receives the first and second image parts comprises a transform component that receives a plurality of image parts that comprise an initial size; and

wherein the transform component that applies sparse matrix multiplication to each of the first and second image parts comprises a transform component that applies sparse matrix multiplication to each image part of the plurality of image parts to obtain a resultant plurality of image parts that comprise a resultant size different from the initial size.

17. The system of claim 16, wherein the transform component that applies sparse matrix multiplication to each image part of the plurality of image parts comprises a transform component that selects the resultant size and the initial size to comprise a ratio therebetween that includes a factor of two.

18. The system of claim 14, wherein the matrix T is one of a discrete cosine transform (DCT) matrix, a discrete sine transform matrix, a Fourier transform matrix, or a Hadamard transform matrix of size N×N, and the matrix T_s is the corresponding transform matrix of size N/2×N/2.

19. The system of claim 14, wherein the transform component that receives the first and second image parts comprises a transform component that receives a first plurality of image parts, wherein the transform component that applies sparse matrix multiplication to each of the first and second image parts comprises a transform component that applies sparse matrix multiplication to each image part of the first plurality of image parts to obtain a second plurality of image parts, and further comprising a transform component that applies sparse matrix multiplication to each image part of the second plurality of image parts.

20. The system of claim 19, wherein the transform component that applies sparse matrix multiplication to each image part of the second plurality of image parts comprises a transform component that applies sparse matrix multiplication to each image part of the second plurality of image parts to obtain a third plurality of image parts, and further comprising a transform component that applies simple linear processing to the third plurality of image parts to obtain low-frequency image parts in a transform domain.

21. The system of claim 20, wherein the transform component that receives the first and second image parts comprises a transform component that receives a plurality of image parts that comprise an initial image length and an initial image height; and

wherein the transform component that applies sparse matrix multiplication to each of the first and second image parts comprises a transform component that applies sparse matrix multiplication to each image part of the plurality of image parts to obtain a resultant plurality of image parts that comprise a resultant image length and a resultant image height, wherein the resultant image length and the initial image length comprise a ratio therebetween that includes a factor of two, wherein the resultant image height and the initial image height comprise a ratio therebetween that includes a factor of two.

22. The system of claim 14, wherein the transform component that receives the first and second image parts comprises:

a transform component that receives a first plurality of image parts in a transform domain that each comprise a low-frequency portion; and

a transform component that applies simple linear processing to the low-frequency portion of each image part of the first plurality of image parts to obtain a second plurality of image parts;

wherein the transform component that applies sparse matrix multiplication to each of the first and second image parts comprises a transform component that applies sparse matrix multiplication to each image part of the second plurality of image parts to obtain a third plurality of image parts, and further comprising a transform component that applies simple linear processing to each image part of the third plurality of image parts to obtain a resultant image in the transform domain.

23. The system of claim 22, wherein the transform component that receives the first and second image parts comprises a transform component that receives a plurality of image parts that comprise an initial image length and an initial image height; and

wherein the transform component that applies sparse matrix multiplication to each of the first and second image parts comprises a transform component that applies sparse matrix multiplication to each image part of the plurality of image parts to obtain a resultant plurality of image parts that comprise a resultant image length and a resultant image height, wherein the initial image length and the resultant image length comprise a ratio therebetween that includes a factor of two, wherein the initial image height and the resultant image height comprise a ratio therebetween that includes a factor of two.

24. The system of claim 14, wherein k1 and k2 each equal

$$\frac{1}{\sqrt{2}\cdot 2}.$$

25. The system of claim 14, wherein k1 and k2 each equal

$$\frac{\sqrt{2}}{2}.$$

26. A system comprising:

a transform component that receives first and second image parts through receiving a first plurality of image parts;

a transform component that applies sparse matrix multiplication to each of the first and second image parts to obtain a second plurality of image parts;

a transform component that applies sparse matrix multiplication to each image part of the second plurality of image parts to obtain a third plurality of image parts; and

a transform component that applies simple linear processing to the third plurality of image parts to obtain low-frequency image parts in a transform domain and to obtain a value of zero for high-frequency image parts in the transform domain.

27. An article, comprising:

a computer-readable signal-bearing medium;

means in the medium for receiving first and second image parts; and

means in the medium for applying sparse matrix multiplication to each of the first and second image parts through utilization of matricies represented by $k1\cdot((T_L T^t_s)+(T_R T^t_s))$ and $k2\cdot((T_L T^t_s)-(T_R T^t_s))$, wherein superscript t denotes transpose of a matrix, k1 and k2 are scalar constants, T_L and T_R are N/2 leftmost and N/2 rightmost columns respectively of an N×N non-identity matrix $T=[T_L T_R]$ such that $T T^t$ is an identity matrix and T_s is an N/2×N/2 non-identity matrix such that $T_s T^t_s$ is an identity matrix.

28. The article of claim 27, wherein the matrices represented by $k1\cdot((T_L T^t_s)+(T_R T^t_s))$ and $k2\cdot((T_L T^t_s)-(T_R T^t_s))$ each include a majority of entries with a value of zero.

29. The article of claim 27, wherein the means in the medium for receiving the first and second image parts comprises means in the medium for receiving a plurality of image parts that comprise an initial size; and

wherein the means in the medium for applying sparse matrix multiplication to each of the first and second image parts comprises means in the medium for applying sparse matrix multiplication to each image part of the plurality of image parts to obtain a resultant plurality of image parts that comprise a resultant size different from the initial size.

30. The article of claim 29, wherein the means in the medium for applying sparse matrix multiplication to each image part of the plurality of image parts comprises means in the medium for selecting the resultant size and the initial size to comprise a ratio therebetween that includes a factor of two.

31. The article of claim 27, wherein the matrix T is one of a discrete cosine transform (DCT) matrix, a discrete sine transform matrix, a Fourier transform matrix, or a Hadamard transform matrix of size N×N, and the matrix T_s is the corresponding transform matrix of size N/2×N/2.

32. The article of claim 27, wherein the means in the medium for receiving the first and second image parts comprises means in the medium for receiving a first plurality of image parts, wherein the means in the medium for applying sparse matrix multiplication to each of the first and second image parts comprises means in the medium for applying sparse matrix multiplication to each image part of the first plurality of image parts to obtain a second plurality of image parts, and further comprising means in the medium for applying sparse matrix multiplication to each image part of the second plurality of image parts.

33. The article of claim 32, wherein the means in the medium for applying sparse matrix multiplication to each image part of the second plurality of image parts comprises means in the medium for applying sparse matrix multiplication to each image part of the second plurality of image parts to obtain a third plurality of image parts, and further comprising means in the medium for applying simple linear processing to the third plurality of image parts to obtain low-frequency image parts in a transform domain.

34. The article of claim 33, wherein the means in the medium for receiving the first and second image parts comprises means in the medium for receiving a plurality of image parts that comprise an initial image length and an initial image height; and

wherein the means in the medium for applying sparse matrix multiplication to each of the first and second image parts comprises means in the medium for applying sparse matrix multiplication to each image part of the plurality of image parts to obtain a resultant plurality of image parts that comprise a resultant image length and a resultant image height, wherein the resultant image length and the initial image length comprise a ratio therebetween that includes a factor of two, wherein the resultant image height and the initial image height comprise a ratio therebetween that includes a factor of two.

35. The article of claim 27, wherein the means in the medium for receiving the first and second image parts comprises:

means in the medium for receiving a first plurality of image parts in a transform domain that each comprise a low-frequency portion; and

means in the medium for applying simple linear processing to the low-frequency portion of each image part of the first plurality of image parts to obtain a second plurality of image parts;

wherein the means in the medium for applying sparse matrix multiplication to each of the first and second image parts comprises means in the medium for applying sparse matrix multiplication to each image part of the second plurality of image parts to obtain a third plurality of image parts, and further comprising means in the medium for applying simple linear processing to each image part of the third plurality of image parts to obtain a resultant image in the transform domain.

36. The article of claim 35, wherein the means in the medium for receiving the first and second image parts comprises means in the medium for receiving a plurality of image parts that comprise an initial image length and an initial image height; and

wherein the means in the medium for applying sparse matrix multiplication to each of the first and second image parts comprises means in the medium for applying sparse matrix multiplication to each image part of the plurality of image parts to obtain a resultant plurality of image parts that comprise a resultant image length and a resultant image height, wherein the initial image length and the resultant image length comprise a ratio therebetween that includes a factor of two, wherein the initial image height and the resultant image height comprise a ratio therebetween that includes a factor of two.

37. The article of claim 27, wherein k1 and k2 each equal

$$\frac{1}{\sqrt{2}\cdot 2}.$$

38. The article of claim 27, wherein k1 and k2 each equal

$$\frac{\sqrt{2}}{2}.$$

39. An article, comprising:

a computer-readable signal-bearing medium;

means in the medium for receiving first and second image parts through receipt of a first plurality of image parts;

means in the medium for applying sparse matrix multiplication to each of the first and second image parts which comprises means in the medium for applying sparse matrix multiplication to each image part of the first plurality of image parts to obtain a second plurality of image parts;

means in the medium for applying sparse matrix multiplication to each image part of the second plurality of image parts to obtain a third plurality of image parts; and

means in the medium for applying simple linear processing to the third plurality of image parts to obtain low-frequency image parts in a transform domain and for obtaining a value of zero for high-frequency image parts in the transform domain.

* * * * *