UNIVERSITY OF TORONTO

INSTITUTE FOR AEROSPACE STUDIES

4925 Dufferin Street, Toronto, Ontario, Canada, M3H 5T6

Project Ickle: Dowel-packer Machine

prepared by

Team 58 – Wednesday

SOON CHEE LOONG 999295793
STEVEN BERIOS 998981428
THOMAS PEARSON 998735659

prepared for

Prof. M.R. Emami

A technical report submitted for
AER201 – Engineering Design

TA: Michael Czajka

April 15, 2012

PROJECT ICKLE: DOWEL-PACKER MACHINE

AER201 2013
M. Reza Emami,
University of Toronto,
Institute for Aerospace Studies,
Division of Engineering Science

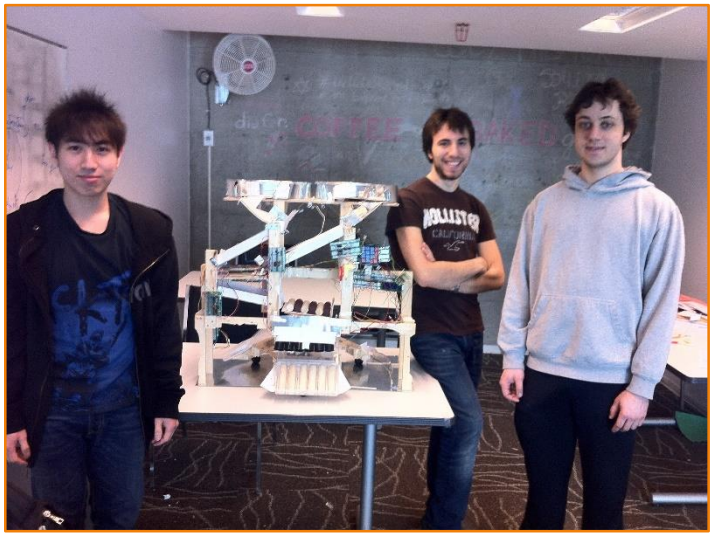

APRIL 15, 2013

SOON CHEE LOONG 999295793
STEVEN BERIOS 998981428
THOMAS PEARSON 998735659
TA: MICHAEL CZAJKA

Project Ickle: Dowel-packer Machine

1 ACKNOWLEDGEMENTS

The authors would like to thank Professor Reza Emami, workshop supervisor Charles Lin, and the esteemed efforts of the Wednesday Section TAs, particularly those of Michael Czajka. The authors would also like to thank all our Engineering Science 1T5 classmates for sharing web resources and for their continued support throughout the project.

2 ABSTRACT

The machine described in this report is a solution to an RFP for sorting and packing dowels. Two colours of dowels are provided and expected to be loaded into 2 reservoirs, one for each colour. The machine is expected to pack these dowels into boxes that have 6 slots each, with the slots being designed to hold exactly one dowel. The dowels should be packed into the boxes in the pattern specified by the user from a predetermined set of 6 patterns. Two boxes are expected to be loaded, with space on the machine for a third. The boxes are also required to be shut and latched by the machine, then ejected in an identified location. The machine must perform all these functions autonomously, with no interaction from humans after the dowels and boxes are loaded, and the instructions input into the machine, up to the point where the boxes have been fully shut and the machine finishes its operations. The machine will be controlled with a microcontroller and keypad, and information will be displayed on an LCD screen. All necessary functions and actuators to accomplish this are to be determined by the design team. Major constraints include a size constraint of a cube with 75 cm long sides, a weight constraint of 6 kg, a run time of 2 minutes and a cost constraint of $230.

This machine performs these functions by breaking the problem down into 5 distinct problems and solving each one with a unique mechanism. The machine orients the dowels with rotating reservoirs, dispenses them as desired with a gate system, loads them all at once with a dropping mechanism, moves the boxes around to various stations with a rotating carousel and closes them with a purposefully shaped wire. Each actuator is powered by its own circuit, which include various circuit protection for the components, driven by a PIC18 microcontroller. The microcontroller is also programmed to interact with the keypad and LCD to satisfy the requirements.

3 TABLE OF CONTENTS

1 Acknowledgements 1
2 Abstract 2
4 Notation & Symbols 5
5 Abbreviations & Terminology 6
6 Introduction 7
6.1 Background 7
6.2 Survey 7
6.3 Project Formulation 7
6.4 Current Solutions 8
7 Objectives, Constraints and Acceptance Criteria 8
7.1 Objectives 8
7.2 Acceptance Criteria 9
7.2.1 Speed 9
7.2.2 Complexity 9
7.2.3 Modularity 9
7.2.4 Financial Cost 10
7.2.5 Reliability and Robustness 10
7.2.6 Moving Parts 10
8 Subsystems 11
8.1 Electromechanical Systems 11
8.1.1 Approach 11
8.1.2 Design Problem 1: Dowel Orientation 11
8.1.3 Design Problem 2: Correct Dispensing of Dowel Patterns 14
8.1.4 Design Problem 3: Loading Dowels into Boxes 15
8.1.5 Design Problem 4: Loading Multiple Boxes 17
8.1.6 Design Problem 5: Shutting the Boxes 19
8.1.7 Holistic Structure 20
8.1.8 Success Rate 21
8.2 Circuits 21
8.2.1 Approach 21
8.2.2 Pin Configurations ..... **Error! Bookmark not defined.**

8.2.3 PIC18F4620 Circuit 22
8.2.4 PIC18F4620 - 4 bit LCD Interface 26
8.2.5 PIC18F4620 - MM74C922 4x4 Keypad Encoder Interface 26
8.2.6 Reservoir Circuits 27
8.2.7 Solenoid Circuits 28
8.2.8 Dropper Circuit 28
8.2.9 Closing Wheel Circuit 29
8.2.10 Microswitch Circuits 29
8.2.11 DS1307 Real Time Clock Circuit 30
8.2.12 Pololu #1200 Stepper Motor Circuit 31
8.2.13 Power Calculations 32
8.2.14 Suggestions for Improvement 32
8.3 Microcontroller 32
8.3.1 Approach 32
8.3.2 Liquid Crystal Display (LCD) 33
8.3.3 4x4 KEYPAD 33
8.3.4 DS1307 Real Time Clock, Microswitches 33
8.3.5 TIP142 NPN Transistor 33
8.3.6 Calculations 34
8.3.7 Suggestions for Improvement 36
9 Integration 36
9.1 Discussion 36
9.2 Holistic Suggestions for Improvement 37
10 Accomplished Schedule 38
11 Conclusions 39
12 Standard Operating Procedure 39
12.1 Loading the Boxes 39
12.2 Orienting the Carousel 39
12.3 Orienting the Dropper Motor 39
12.4 Loading the Dowels 39
12.5 Operation 39
13 Bibliography ..... **Error! Bookmark not defined.**

4 NOTATION & SYMBOLS

Symbol	Description	Symbol	Description
	OR gate		Non-inverting buffer
	AND gate		Inverter (NOT gate)
	NAND gate		Op-amp
	Microswitch		Sensor
	5V supply		Ground
	12V supply		Resistor
	Pin		Potentiometer
	Motor		Intersecting wires (connected at node)
	Wire		Intersecting wires (no connection)

Symbol	Description
P	Power
V	Voltage
I	Current
R	Resistance
I^2C	Inter-Integrated Circuit
IC	Integrated Circuit

5 ABBREVIATIONS & TERMINOLOGY

Term	Description
Box platforms	The 3 white surfaces on the outside of the carousel
Carousel	The large hexagonal structure underneath the frame
Closing wire	The long, rounded wire connected to the reservoir base and the frame
Collection ramp	The long ramp underneath the gate mechanism
Dowel aligning ramp system	The set of small ramps adjacent to the reservoirs
Dowel separators	The wires and intruding walls inside the reservoirs
Dowel splitting tubes	The system of walls and tubes below the dropper floor
Dropper	The mechanism at the end of the collection ramp that drops the dowels into the boxes
Dropper floor	The wooden platform of the dropper adjacent to the collection ramp
Gate mechanism	The 4 solenoids and gates in between the bottom of the receptacles
Guard wall	The short, rounded piece of sheet metal attached to the base of the robot
Platform walls	The short, 3-sided walls attached to the platforms
Receptacles	The 2 long ramps in the center of the frame; this is where dowels are stored
Reservoir base	The piece of plywood supporting the two reservoirs
Reservoir walls	The pieces of sheet metal that surround the reservoirs
Reservoirs	The cylindrical objects at the top of the machine where the dowels enter

6 INTRODUCTION

6.1 BACKGROUND

Dowels are known to serve a number of uses in simple mechanical systems. For example, dowels are used to strengthen a woodworker's craft's joints [1] and as rotors in wooden generators used to convert mechanical energy to electrical energy [2]. Additional example uses include creating plate racks, replace broken chair rails, hanging closet rod, and create a custom curtain rod [3].

A perfect mass-market retail system protects its product and promotes the brand with its distinctive shape, unique opening method, lightweight, compact, and low cost packaging [4].

Packaging dowels in unique boxes allows dowels to be marketed more effectively. The boxes supplied are also reusable, an upgrade from the usual plastic packaging that cannot be resealed once opened [5].

6.2 SURVEY

While a relatively simple problem in principle, designing a system of organizing the dowels in such a way that prevented jamming was far from trivial, and required the most foresight.

Two reference designs were consulted during the preliminary design of the reservoir systems responsible for initial contact and organization of the dowels, and served as a proof of concept to demonstrate the viability of a spinning platform forcing cylindrical objects outwards to the perimeter of the container. The first design is that of a past AER201 group involving the organization of cylindrical vials which utilizes the notion of a centrifuge to force the vials into a single channel (http://www.youtube.com/watch?v=F1g0mAieCoo). The second design is a segment of an industrial plastic water bottle manufacturing system, and similarly contains a large centrifuge forcing empty water bottles towards a single-channeled outer ring, preventing the stacking of water bottles using a large spinning brush (http://www.youtube.com/watch?v=6R9dzmeyvRI).

6.3 PROJECT FORMULATION

AER201 course requires its 2nd year Engineering Science students to design autonomous robots to simulate a real project development process for the students. Prof. M. Reza Emami, has requested a need for a machine that can package light and dark wood dowels in boxes in 6 different combinations reliably and quickly, based on operator's keyed-in requests [6]. The Request-For-Proposal (RFP) contains constraints, which includes costs, size, operation time, and weight.

The success of this project will benefit both consumers and producers in manufacturing cost, market branding, and a greener packaging system as the DowelBot is able to replace expensive machinery and labour cost. In addition, the DowelBot is able to package distinct dowel patterns in different boxes which can be used as an extra feature in the packaging industry.

The goal of this project is to produce a functional, effective, and efficient robot that helps the user package dowels into boxes. The objective of this project is to produce a robot that meets the constraints of the RFP given such as cost constraint of CAD230, mass constraint of 6kg, dimension constraints of 0.75 x 0.75 x 0.75 m3, and an operation time constraint of 2 minutes.

The prototype is a Carousel that holds and moves the boxes to the different mechanisms of the DowelBot.

6.4 Current Solutions

Alternative design solutions were discussed in detail and the proposed solution which incorporates the best design was chosen based on the criteria, cost, speed, and safety. Planning was done based on weekly tasks and the machine was expected to be fully functional by 10th April 2013. The total cost of the project which includes manufacturing costs is CAD 230.00. The machine was built by our Electrical Expert, Soon Chee Loong, Programming Specialist, Steven Berios, and Mechanical Craftsman, Tommy Pearson.

7 Objectives, Constraints and Acceptance Criteria

The chosen design aims to address needs outlined in the client's request for proposal by providing a solution that exhibits:

Modularity – in well-defined functional components which are compact and well integrated

Robustness – in reliable performance and long term durability

Efficiency – in material and energy use

Elegance – in both functionality and form

7.1 Objectives

1. The proof-of-concept prototype should fulfill the following objectives:
2. The prototype shall completely fit within a 75x75x75 cm^3
3. The weight of the machine shall not exceed 6 kg.
4. The total prototype costs shall not exceed $230 CDN.
5. The machine shall be fully autonomous and operate using its own power supply or plugged in the AC, 110V-60Hz, 3-pin outlet.
6. In case of emergency, <stop> button onboard shall stop all mechanical moving parts.
7. The machine must be fully autonomous, and no interaction with an external PC or remote control is permitted during operation. Operation must start by pressing a <start> button on the keypad.
8. No installation or instrumentation is allowed in addition to what is devised within the machine.
9. The locations for supplying dowels and boxes and also the pickup location/bin must be specified in the machine clearly.
10. At the end of each run, the machine display must be on prompt to show the following information per operator's request: operation time, number of dowels remaining in each reservoir, and the packaging pattern for each box.
11. The machine user interface for both operation and information retrieval must be self-explanatory, and provide easy navigation for operators of various skill levels.

12. Each box is “packaged correctly” if all dowels are placed according to the operator’s selected pattern for the particular box.
13. Each box is “closed completely” only if the cover is completely closed and the latch is snapped.
14. Each box or dowel is considered as “damaged” if there are clear defects as a result of the operation, to the referee’s discretion.
15. The operation time is the duration between when the <start> button on the keypad is pressed and when the termination/completion message is shown on the machine LCD. Total operation time shall be correctly recorded and shall not exceed 2 minutes.
16. The operation time is considered correctly recorded if it equals to the time measured by the referee with an uncertainty of 0.05.
17. The machine’s response to the operator’s inquiry about the packaging statistics is considered “correct” if it is according to the outcome of the performed operation, otherwise it is considered as “incorrect”.
18. Each operation is “qualified” for scoring if the machine delivers at least one packed and closed box (with minimums 5 dowels in each, even if not placed or sorted correctly) to the pickup location/bin within 2 minutes, returns to the standby mode by displaying the completion or termination message at the end of its operation, and prompts for packaging information.
19. Each operation is “disqualified” if the machine structurally collapses, falls over, or hangs or jams unpredictably (for more than 2 minutes) with no termination display, or damages a box, or terminates the operation before delivering at least one packed and closed box (with minimum 5 dowels in each, even if not placed or sorted correctly) to the pickup location/bin, or does not display termination/completion message on the LCD at the end of operation, or the team declares the termination. If any of the above happens to the first run, the team will have 3 minutes to fix the system and run for the second time, should they wish.
20. There will be no control on the conditions of the contest environment.
21. The machine must pose no hazard to the operator, and shall not be perceived as hazardous (e.g., too much vibration or noise or frequent sparks during the operation).

7.2 Acceptance Criteria

During both the conceptualization and construction stages of the project, design decisions were made based on the following design criteria.

7.2.1 Speed

7.2.2 Complexity

As a whole, the complexity of a system can be measured by the number of interrelated parts it contains. A design that allows a function to be executed with similar effectiveness but with a simpler design, would be preferred over a more complex design.

7.2.3 Modularity

A design where each subsystem/component performing a certain task is physically separate from the others would allow for more ease during assembly, testing and repairs. Also, a more modular design

would allow for more freedom if changes to the design were made. Similarly, for the code, sub functions should be made for readability and good style.

7.2.4 Financial Cost

The total budget for the final machine has been set to $227. A lower cost would be preferred if it does not detract from the functionality and quality (such as accuracy and speed) of the machine. The cost of the prototype should also be kept to a minimum.

7.2.5 Reliability and Robustness

The device should be built to minimize the need for repairs. The design must take into account various conditions (ex. high temperature ambient lighting, etc.) and be able to withstand a certain amount of abuse from variable external forces (e.g. wind, rough handling, etc.) For the microcontroller, the code must take into account different cases in order to anticipate potential problems during operation time.

7.2.6 Moving Parts

The design should contain the most minimum amount of moving parts and more emphasis on mechanical systems, gravity, and physics to simplify the electric circuits and microcontroller programming which reduces the complexity in designing both these systems. Seniors also advised that minimal moving parts are always a better design.

8 BUDGET

Materials	**Usage**	**Quantity/Dimensions**	**Total Cost (CAD)**	**Source**
Wood	Construct Frame and Carousel	4'x8'x3/8"; 1395 cm^3	20.00	[34]
Sheet Metal	Construct Reservoir	500 cm^3	20.00	[35]
Wheels	Closes the box, til the floor backwards to allow dowels to drop into box	1	1.62	[33]
Metal Bars	Axle for Wheels	2	10.00	[32]
Screws	Connects materials together	2	6.82	[31]
Microswitch	Count number of dowels that entered the Dowel Receptacle	2	4.00	[6]
DC Motor	Spins the reservoirs	2	6.38	[30]
DC Motor	Moves floor to enable dowels to drop into the box.	1	3.19	[30]
Solenoids	Allow dowels to drop one by one into the Dowel Sorter	4	20.00	[6]
Stepper Motor	Moves the boxes to the different mechanisms	1	19.88	[29]
Cables	Connects the circuits and sensors	1	5.00	[28]
PIC18F4620	Controls all circuit activities	1	7.94	[12]
Development Board	Debugs and powers the microcontroller	1	50.00	[6]

Power Supply	Supplies power to all actuators	1	15.00	[6]
LCD and Keypad	Allows User Interface with Robot	1	6.00	[6]
Resistors	Control current flow	40	4.00	[27]
Capacitors	Bypass Noise	20	0.48	[26]
Zener/LED Diodes	Prevent Voltage Spike and Debugging	20	5.52	[25]
Buffers 4050	Isolate Circuits	10	6.20	[13]
Bipolar Transistor	Acts as a switch for DC Motors	10	5.00	[14]
MOSFET Transistor	Acts as a switch for Stepper Motor	10	10.50	[15]
		Total Cost	**227.53**	
Note: The prices are estimates only. The actual price will be based on the actual components used.				

9 SUBSYSTEMS

9.1 ELECTROMECHANICAL SYSTEMS

9.1.1 Approach

The approach taken for the overall design of the robot was to break down the requirements and design a specific mechanism to solve each problem. From the top down, the problems were broken down as follows: Orienting the dowels, dispensing dowels according to the specified pattern, loading the dowels into the boxes, loading multiple boxes and shutting the boxes. These problems are elaborated below. Once individual solutions had been determined, they were brought together into the final design of the robot.

9.1.2 Design Problem 1: Dowel Orientation

9.1.2.1 Description of Problem

One of the most difficult challenges was orienting the dowels from their random orientation and preventing jamming. Due to the dimensional constraint of 75 cm in all directions and the shape of the dowels, the dowels needed to be aligned side by side instead of head-to-tail, since 12 dowels will exceed 75 cm head-to-tail. Jamming is also a problem that occurs in the reservoir, primarily due to dowels entering the reservoir with different orientations.

9.1.2.2 Solution

In order to remove the problems caused by randomness, the reservoirs were design as cylindrical compartments with a rotating floor, 5 cm high walls and a diameter of 30 cm. The rotating floor creates centripetal force that forces the dowels to the stationary walls, and aligns them tangentially to the circular base as seen in figure 1.

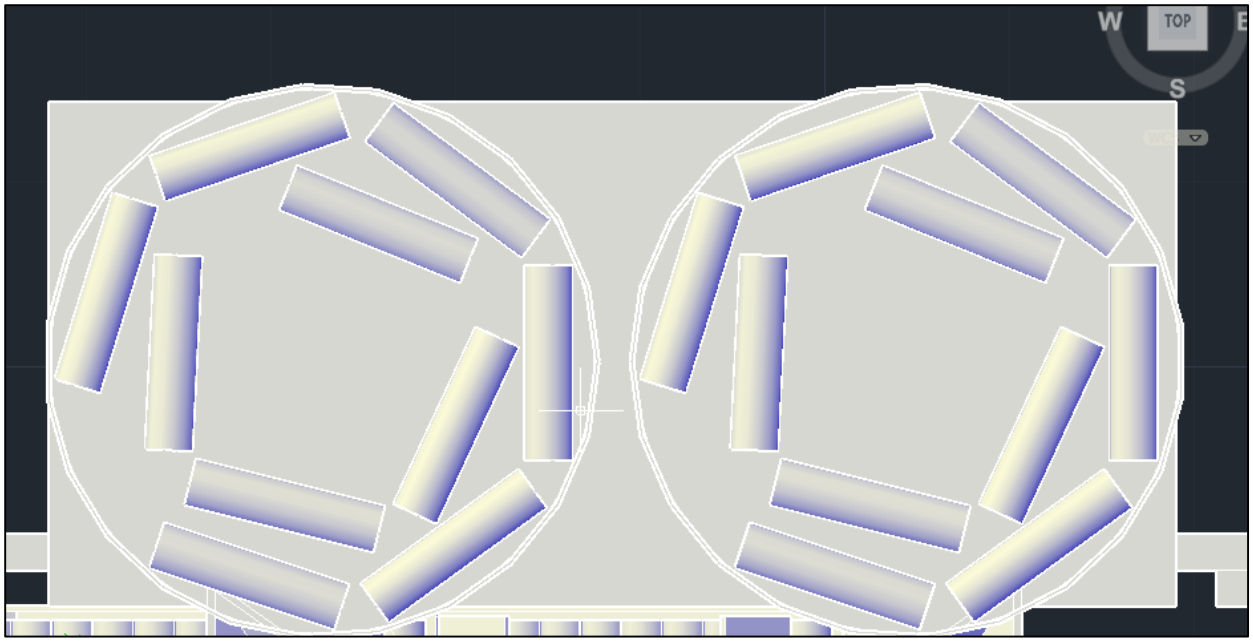

The next step of this design is to remove them one at a time. In order to accomplish this, a small section of the wall is removed and another piece is added to direct the dowels out of the reservoir. The altered wall is illustrated in figures 2 in red. This alone is insufficient to prevent jamming and ensure the dowels exit one at a time, as they may still stack on top of each other. The most common jam is shown in figure 3.

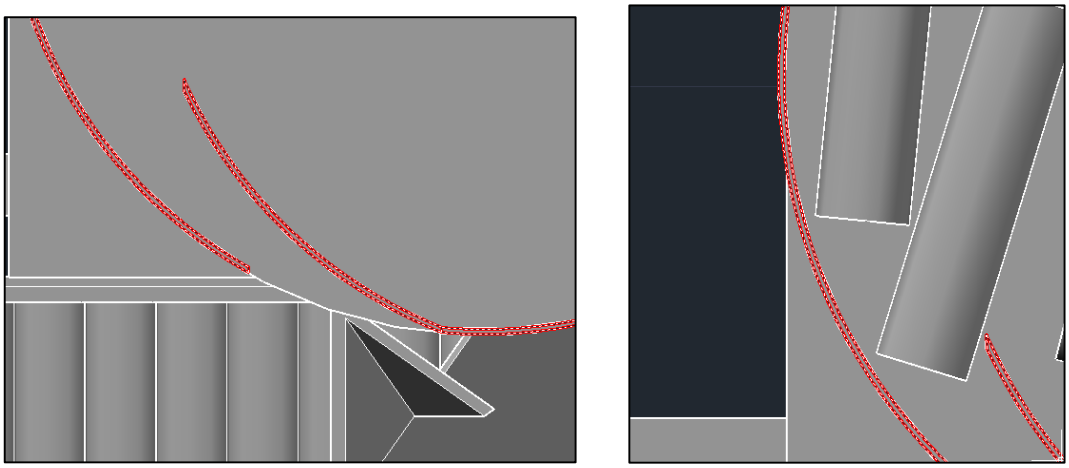

To prevent this type of jam, a wire is used to extend the additional piece of wall, from the top of the wall down to the base of the reservoir, and acts as a dowel separator. This wire raises the dowels that are not properly tangential. An additional piece of wall is also used above the gap between the two parts of wall and above the height of a single dowel to push raised dowels back towards the center of the reservoir.

Once the dowels exit the reservoir, a system of ramps is used to change their alignment from head-to-tail to side by side. The first ramp is in the shape of a 'V', which the dowels travel down and any inconsistencies in alignment are resolved. Next, one side of the 'V' drops away. The dowels exit the reservoir with enough speed that their alignment does not change for one length of a dowel past the drop off. At this point, they hit a wall that acts as a pivot for the dowels, with the back of the dowel swinging down to the same height as the front. The dowels, now aligned parallel with the ground, roll down the receptacle, which is exactly long enough for all 12 dowels. For the brown dowels, it was found that a trap door helps with this final alignment that only gives way when the full weight of an aligned dowel is resting against it.

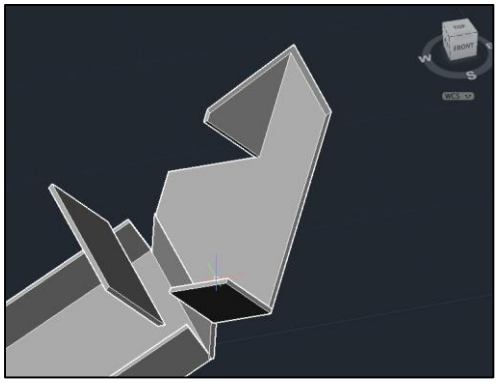

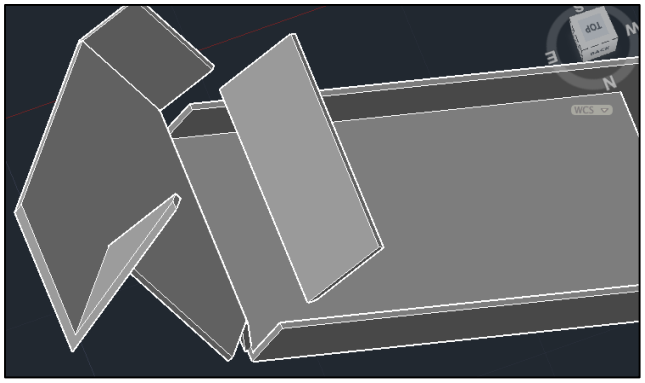

9.1.2.3 Materials and Components

The reservoir walls were constructed of aluminum sheet metal and attached to the 3/8” plywood base with L brackets on the outside. The circular base was made of stiff matboard. The bases were mounted directly on motors using plastic gears to provide more structure at the center and a single screw was securing each base to the motor shaft, with crazy glue to strengthen the connection. The motors were embedded into the wooden base with a small piece of sheet metal to hold them in place. The motors were Shenzhen DC Gearhead Motors (angle). The ramp system and receptacles were also made of matboard. A piece of sheet aluminum was used to reduce friction on the brown ramp.

The benefit of sheet aluminum and matboard is that they are lightweight while providing enough structure. The aluminum is thinner, easier to bend and has less friction, and the matboard has more friction (beneficial for base) and structure.

9.1.2.4 Force Calculations

The torque needs to exceed the force of friction with 12 dowels on it. The coefficient of friction between wood and paper is 0.52. The force exerted by the 12 dowels on the wooden surface (force of friction) is 0.52 x 25 g x 12 dowels x 9.8 m/s2 = 1.53 N. Taking the distance of the force from the axis as the radius (15 cm), we get a frictional torque of 0.23 N m.

[1] coefficient of friction http://hypertextbook.com/facts/2005/wood.shtml

9.1.3 Design Problem 2: Correct Dispensing of Dowel Patterns

9.1.3.1 Description of Problem

Once the dowels are aligned properly, they need to be released one at a time, in the correct order specified by the user.

9.1.3.2 Solution

A gate system is the most logical solution to this problem. A single gate would allow dowels to be dispensed on command, but would not be able to easily dispense only one at a time. A double gate system allows for reliable dispensing of single dowels. When the first gate is opened, the dowels all drop to rest on the second gate. The distance between the first gate and the second is equal to the diameter of a single dowel. When the first gate closes, there is only a single dowel between the two gates, which will be released when the second gate opens.

9.1.3.3 Materials and Components

The gates were made of sheet metal, and holes were cut in the receptacle for the gates. They were attached to 4 linear solenoids that provided the necessary motion. The solenoids were mounted on a piece of 3/8” plywood. Additional pieces of plywood and screws were used to prevent the solenoid from extending past its operational limits, with pieces of matboard glued on to the additional pieces to find the exact limits precisely. The solenoid system is shown in figure 6 below.

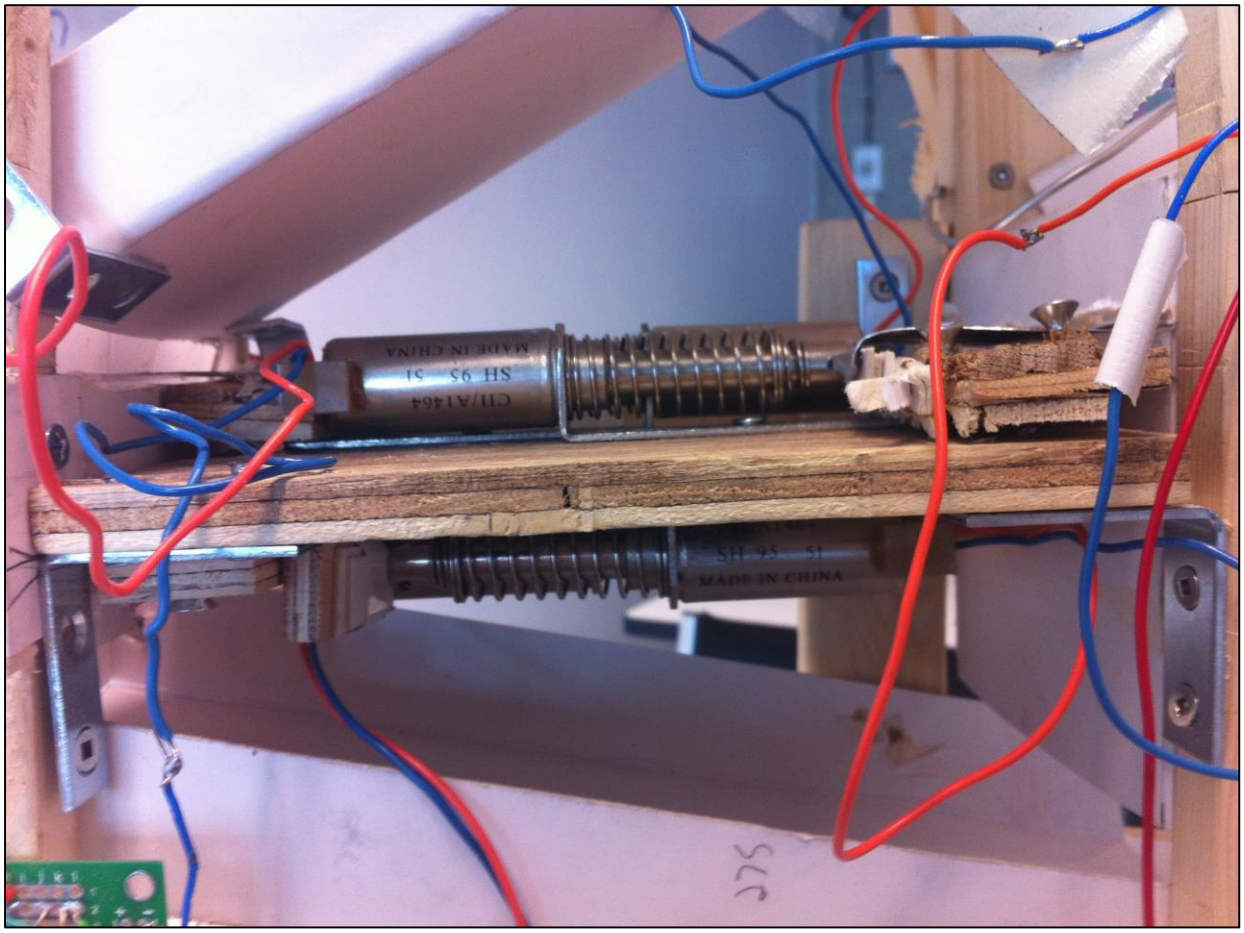

9.1.4 Design Problem 3: Loading Dowels into Boxes

9.1.4.1 Description of Problem

A central problem to this project is getting the dowels into the boxes in a consistent manner. Loading the dowels one at a time requires time and precision, but loading them all at once presents other problems, such as the fact that 6 dowels side by side are closer than the slots for them on the boxes.

9.1.4.2 Solution

This robot uses a floor that pivots to drop all 6 dowels into the box at once. The floor is at the end of a ramp that collects dowels from the gate mechanisms. The floor is at a 5 degree angle to ensure the dowels stay at the correct end, while not being too much of an angle to present a problem when dropping the dowels. A wall stopping the dowels from falling of the end is connected to a pulley mounted on a motor via some fishing line. When the motor turns, it pull the line shorter and pulls up the floor to roughly 80 degrees before the line automatically falls off the pulley, eliminating the possibility of problems due to over rotation of the motor. The motor then turns it the opposite direction, lowering the floor to its original position. A strategically placed piece of matboard at the bottom of the pulley prevents the line from engaging by pushing it away from the pulley. This mechanical system greatly reduces the accuracy required from the PIC in terms of timing.

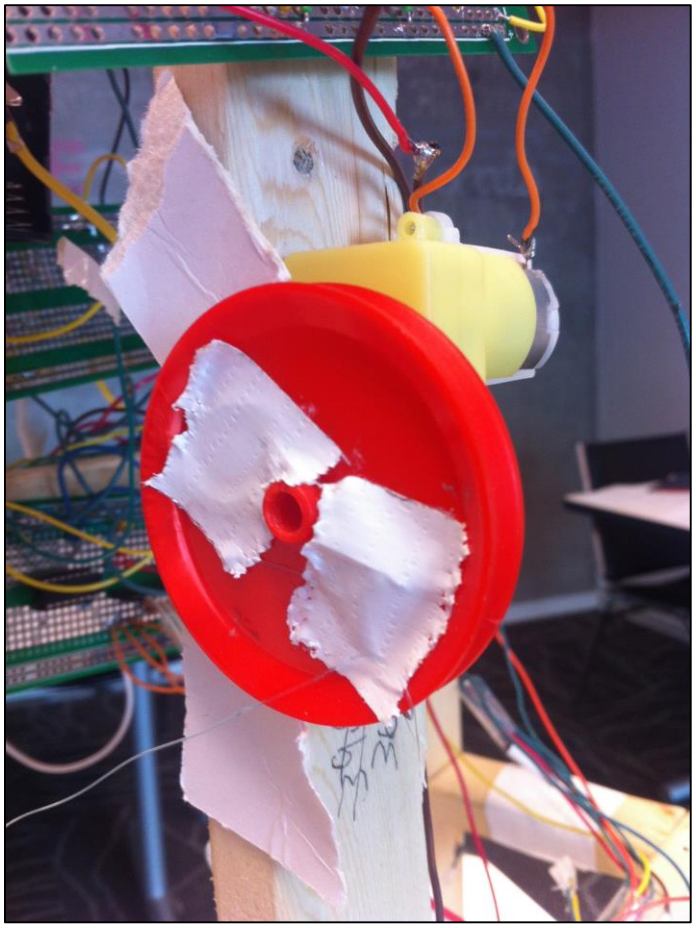

Once the floor has been angled enough for the dowels to fall off, the dowels need to be spread out to the correct distance to fall into the box. This is done using 5 small angled walls that separate the dowels into to 6 tubes, spaced at the same distance as the slots in the box. These are both mounted on a piece of wood angled at 60 degrees from horizontal, as this was the best angle to consistently load dowels as determined by tests. An additional piece was placed on top of these to make sure the dowels don't slide off the floor prematurely. Four pieces of tape were used per tube to prevent the dowels from getting stuck on the tubes' edges.

9.1.4.3 Materials and Components

The motor used was a Shenzhen DC Gearhead Motors (straight) and was friction fit to the plastic pulley that had diameter of 3.5 cm. The floor was made of a piece of 3/8" plywood screwed into a small piece of 2x4 cut to 5 degrees. A piece of matboard was mounted on top of the plywood to reduce friction. The separating walls were made of construction paper and the tubes were film canisters that had had their bottoms cut off. In future iterations, sheet aluminum would be recommended to replace both the walls and the tubes, as they can be bent at 90 degrees and screwed into the wooden base.

9.1.5 Design Problem 4: Loading Multiple Boxes

9.1.5.1 Description of Problem

As specified in the RFP, the machine must have the ability to load up to 2 boxes, and must have space for 3 boxes. To solve this, either the loading mechanism must be moved to the boxes, or the boxes must be moved to the loading mechanism.

9.1.5.2 Solution

The solution employed by this device to load multiple boxes is a carousel that has space for up to 3 boxes. The carousel angles the boxes at 35 degrees from horizontal due to size constraints. The carousel was originally designed for 6 boxes but was cut down due to weight constraints. It is mounted on 3 castors to increase stability. On each of the 3 platforms for the boxes, walls were placed on the top and

sides of the box location to hold the box in the proper place. The boxes do not fall off the platforms because when the lid is open, it latches onto the top wall, as seen in figure 9. When the lid closes, the box is no longer held in place and will slide off the carousel at the desired location.

The carousel is powered by a stepper motor via gears with a 1:1 ratio. The gear system allows for the stepper to be swapped out when needed. The stepper was chosen as it can rotate the carousel a precise amount every time without the need for sensors. The carousel is not fixed to the machine to allow for easier transportation, access to the stepper and the bottom of the carousel. Instead, the stepper turns a wheel that has been cut down to the spokes. The carousel has a screw inside that the spokes will push when the carousel is mounted.

9.1.5.3 Materials and Components

The structure of the carousel was made with two hexagons of 2x1 lumber, attached by additional pieces. A piece of 3/8” plywood was screwed on the top, with a hole in the middle. This hole aligns with a plastic gear on the stepper mechanism, to keep it in the correct position. Trapezoidal pieces of matboard were attached to the frame as platforms for the boxes. Matboard was also used for the walls to hold the boxes. The structure of the carousel was cut down quite a bit to satisfy weight constraints. The stepper mechanism was mounted on a piece of 3/8” plywood that was attached to the base of the robot using cut down boxes of 2x4 lumber. A bolt was securely fastened to the plywood as the axis for wheel. Plastic gears were screwed onto both the top and the bottom of the wheel. The bottom gear was

connected to the gear mounted on the stepper motor, and the upper gear fits the hole in the center of the carousel.

9.1.6 Design Problem 5: Shutting the Boxes

9.1.6.1 Description of Problem

As specified by the RFP, the boxes need to be closed and latched once they have been loaded. Given the current solutions to the other problems, the boxes are all fully opened, slightly more than 180 degrees.

9.1.6.2 Solution

The solution used by this device exploits the rotational motion to close the box. Once past the dropping stage the boxes encounter a wire shaped in a manner that slowly closes the box as it moves around. Because the lid holds the box in place when open, a guard wall is required to hold the box on its platform once it is closed. The wire and guard wall can be seen in figure 11 below.

9.1.6.3 Materials and Components

The next stage requires latching the box. This phase never reached implementation, although it was planned. Ideally, a simple wheel would be employed to force the box shut. Problems may have arisen due to the angle of box on the carousel. A linear actuator may be required for effective latching of the boxes. Alternatively, a string attached to a flat surface over top of the box and a motor below could be implemented to squeeze the boxes shut.

9.1.7 Holistic Structure

The structure of the robot rests on a sheet of aluminum 75 cm by 45 cm. The stepper mechanism was precisely screwed into the center of the base. The primary 2x1 wooden structure was also screwed into the base. The primary purpose of this piece of aluminum is to keep the stepper and the guard wall in their proper place. The primary structure was originally designed with 4 angled braces as seen in figure 11, but it was determined that one was required. Several sections of the rest of the structure was also cut down due to weight issues.

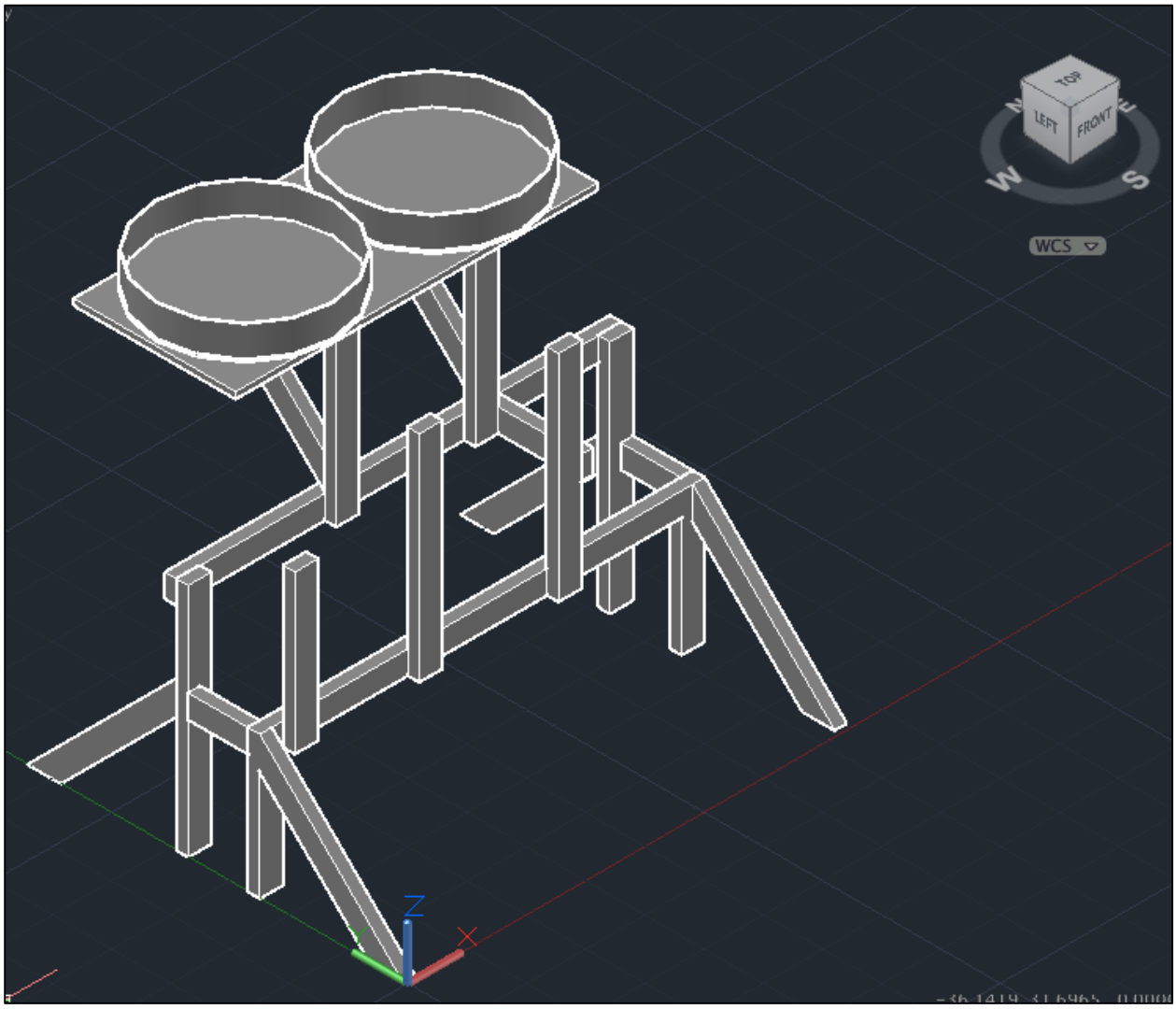

The structure was designed around the receptacles, which fit in between the 2 long horizontal pieces. The 2 reservoirs are mounted on a piece of plywood attached to the back 2 vertical supports, with only one of the angled braces used in the final machine. The dropper mechanism fits between the two vertical supports on the front of the structure. The structure was designed around the path of the boxes, including the path of the lids closing, as seen in figure 13.

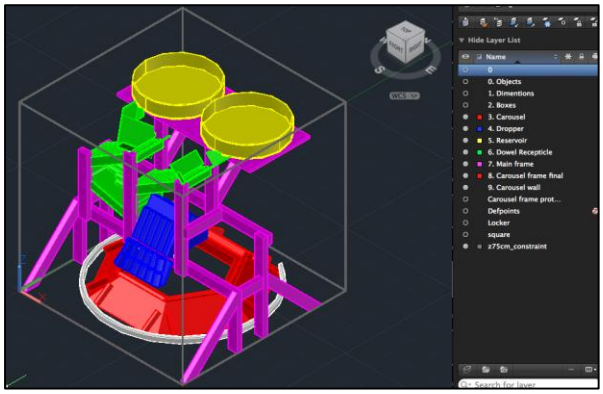

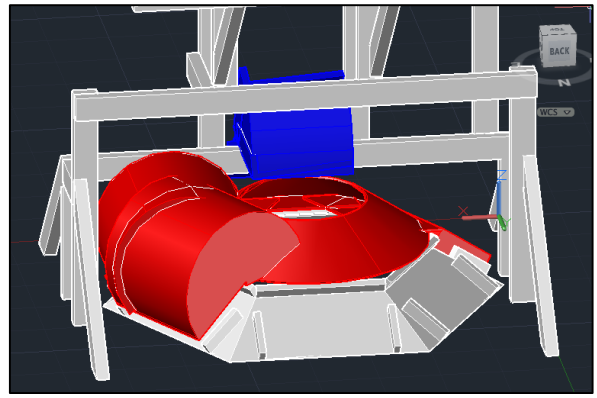

9.1.8 Success Rate

The various sections of the robot each have varying rates of success. At the time of the demo, the most inconsistent part needed for a qualified run was the reservoirs. Due to lack of calibration of both the power supplied and the geometry of the ramp system and dowel splitter, the white and brown reservoirs dispenses dowels correctly with a success rate 20% and 5% respectively. The gate mechanism functioned with a success rate of over 95%, as did the dropper. The closing wire and rotation of the carousel worked 100% of the time, although the rate at which the second box was aligned properly for dispensing dowels was close to 10%.

9.2 Circuits

9.2.1 Approach

Every circuit designer has to account for a number of problems. In this design, the circuits had to deal with these various problems:

1. Number of pins available
2. Sufficient Power Requirements
3. Voltage and Current requirements for various actuators
4. Signal Handling
5. Safety
6. Circuit Design for all actuators

9.2.1.1 Pins Used

The microcontroller used for this robot design project is PIC18F4620. Each micro-controller has its limited number of general input, output, and special purpose pins. To aim for the most optimal design, the micro-controller PIC18F4620 is used due to its ability to provide enough IO pins, I^2C peripheral, and rising-edge trigger interrupt module.

9.2.1.2 Power Requirements

The power requirements for various actuators are shown in Table 500. Sufficient power needs to be given to each actuator in order for it to function effectively.

9.2.1.3 Voltage and Current Requirements

The voltage requirements for various actuators are shown in Table 501. Proper voltage and current needs to be given to each actuator in order for it to function effectively. For example, supplying a DC Motor too much voltage causes it to run really quickly which may not be desired. In addition, supplying too much voltage causes an actuator to heat up and may burn out the actuator. On the other hand, supplying a DC Motor too little voltage causes it to run slowly and may not have enough torque to actuate its function. In this case, the DC Motor will not be able to rotate all 12 dowels in each reservoir.

9.2.1.4 Signal Handling

Signal regulation has to be done in order to ensure the micro-controller receives a stable 5V. Also, it has to be protected from voltage and current spikes from inductive load. Malfunction of the PIC18F4620 results of malfunctioning of the entire controls and communications that occurs on the robot.

9.2.1.5 Safety

The robot has various actuators that may be dangerous to the user when it malfunctions. The user needs to have the capability of stopping all actuators on the robot in case of emergency.

9.2.1.6 Actuator Circuit Design

Each actuator requires a different circuit design. However, almost all of them exhibit similar properties as shown in Figure 400.

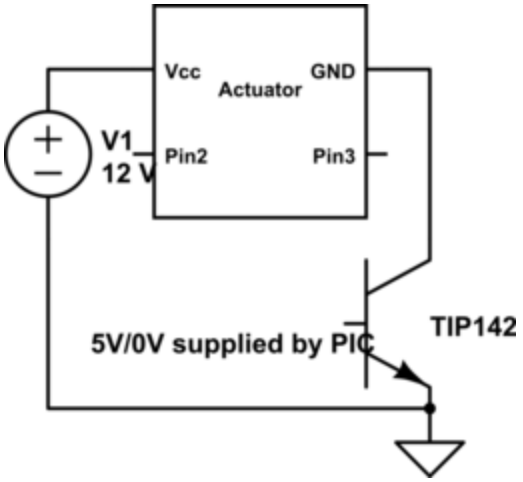

All actuators are driven when the PIC supplies a 5v to the TIP142 Transistor, which connects the actuator to ground. Additionally, a 1N4001 Diode is connected in parallel with an inductive to prevent high voltage spikes when the TIP142 BJT NPN Transistor switches state.

9.2.2 Solutions

9.2.2.1 Pin Configurations

9.2.2.1.1 Special Purpose Pins

Input

A7 - A6: Oscillators, connected to 20MHz Oscillator

B2 - B1: Rising Edge Micro Switch Interrupt

Output
C4 - C3: DS1307 Real Time Clock (SDA, SCL)

9.2.2.1.2 General Purpose Pins

Input
B7 - B3: M7C922 Keypad
E0: Micro Switch, Dropper

Output
A4 - A1: Stepper Motor
A0, C0: Reservoirs, both motors
C7, C6, C5, A5: 4 Solenoids
C2, C1: SN754410 H-Bridge, Bidirectional Motor, Dropper
D7 - D2: 4-bit LCD, Enable, Reset
D1, D0: SN754410 H-Bridge, Bidirectional Motor, Closing Wheel

In summary, nearly all pins on the PIC18F4620 were needed for this circuit design. The only remaining I/O pins that enables further upgrade in the future are Pin E1 and Pin E2. Also, the PIC18F4620 can be made to interface with the PIC18F2550 to increase its number of available pins, which was not needed in this design.

9.2.2.2 Power Supply 12V, 5A

The calculations are done by measuring the resistance of each actuator using an ohmmeter, and calculate its current based on the voltage across it using Ohm's Law, V = IR. Then, the power required for each specific actuator can be calculated by multiplying the current going through it and the voltage across it, P = VI. Although the total sum of power requirements for all actuators are high, the micro-controller design does not require all actuators to run simultaneously.

Therefore, the total power required based on the the maximum power requirement at any given time is 21.86 W as shown in Table 547. The power supply used has a rating of 12V 5A = 60W which is sufficient for this design.

9.2.2.3 Voltage Regulator, Pulse Width Modulation, Alternate Power Supply, and Resistors

1. 12 V: Solenoids, Stepper Motor
2. 5 V: PIC18F460 microcontroller, SN754410 H-Bridge IC, Micro Switches
3. 3 V: DC Motors

The current is limited by connected appropriate resistors in series with each actuator.

The resistor values are chosen based on Ohm's Law, $V = IR_{total}$, where R_{total} is the total series resistance of each actuator circuit, V is the voltage supplied to each actuator circuit and I is the a current rating thats below the maximum current any component that the actuator circuit is able to handle. In this case, the resistor is manipulated in order to achieve a current, I that is below the component's maximum current rating, I_{max}.

As the power supply provides a constant 12 V, this can be step down into 5V and 3V by different methods:

9.2.2.3.1 Method 1: Voltage Regulator

Voltage regulators such as LM7805 and LM117 can be used to step down 12V power supply into 5V and 3V. The advantage of voltage regulator is that it provides a stable voltage signal.

9.2.2.3.2 Method 2: Pulse Width Modulation (PWM)

PWM is done by changing the duty cycle of voltage supplied to an actuator. This can be done in 2 ways:

9.2.2.3.2.1 PIC18F4620 PWM Peripherals

The PIC18F4620 provides 2 PWM Peripheral pins that are easy to work with and does not require any external circuit design. However, it will not be sufficient if more than 2 PWM signals are needed.

9.2.2.3.2.2 External PWM Circuit

An external PWM Circuit can be added to provide PWM signals to actuators.

The benefits of PWM are that the amount of voltage supplied can be easily modified to to enhance the effectiveness of an actuator.

9.2.2.3.3 Method 3: External Power Supply

External power supply with a 3V and 5V can be used instead by establishing a common ground with each other and connected its positive pins to the actuators. Although not desirable due to increased weight and cost, this greatly simplifies circuit design and allows quick prototyping. An example of an external power supply would be connecting 1.5V batteries in series.

9.2.2.3.4 LM7805 Voltage Regulator, 4050 Buffer and 1N4001 Diode

To ensure safety of operation, a 1k resistor and a 4050 Non-Inverting Buffer is connected in series of every pins on the PIC18F4620 to prevent excessive current or voltage sparks from inductive loads such as motors and solenoids from destroying the microcontroller. Also, these voltage and current sparks are prevented by connecting a 1N4001 Diode in parallel with each inductive load.

An LM7805 Voltage Regulator is used to provide a stable 5V supply to the microcontroller.

9.2.3 Circuit Design

9.2.3.1 PIC18F4620 Circuit

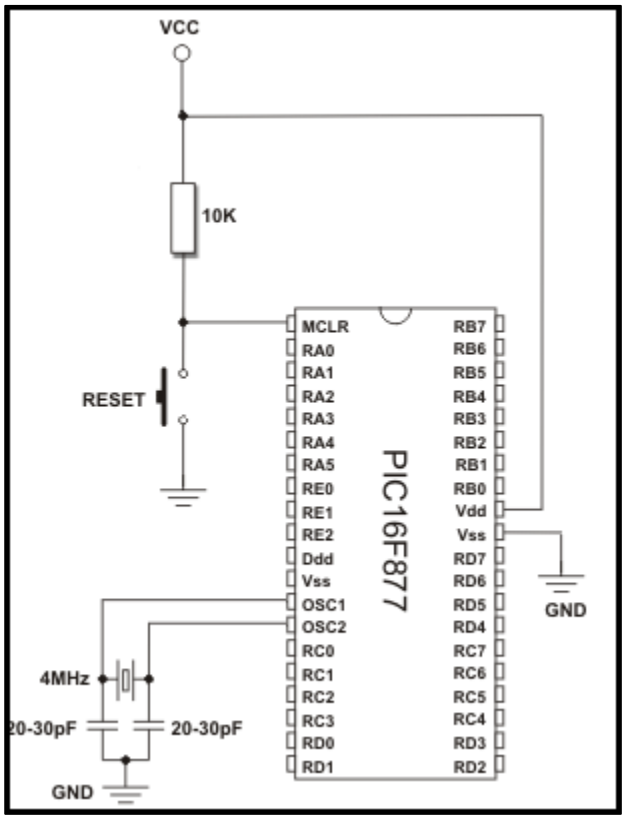

A 20 MHz clock is oscillator is used instead.

9.2.4 PIC18F4620 - 4 bit LCD Interface

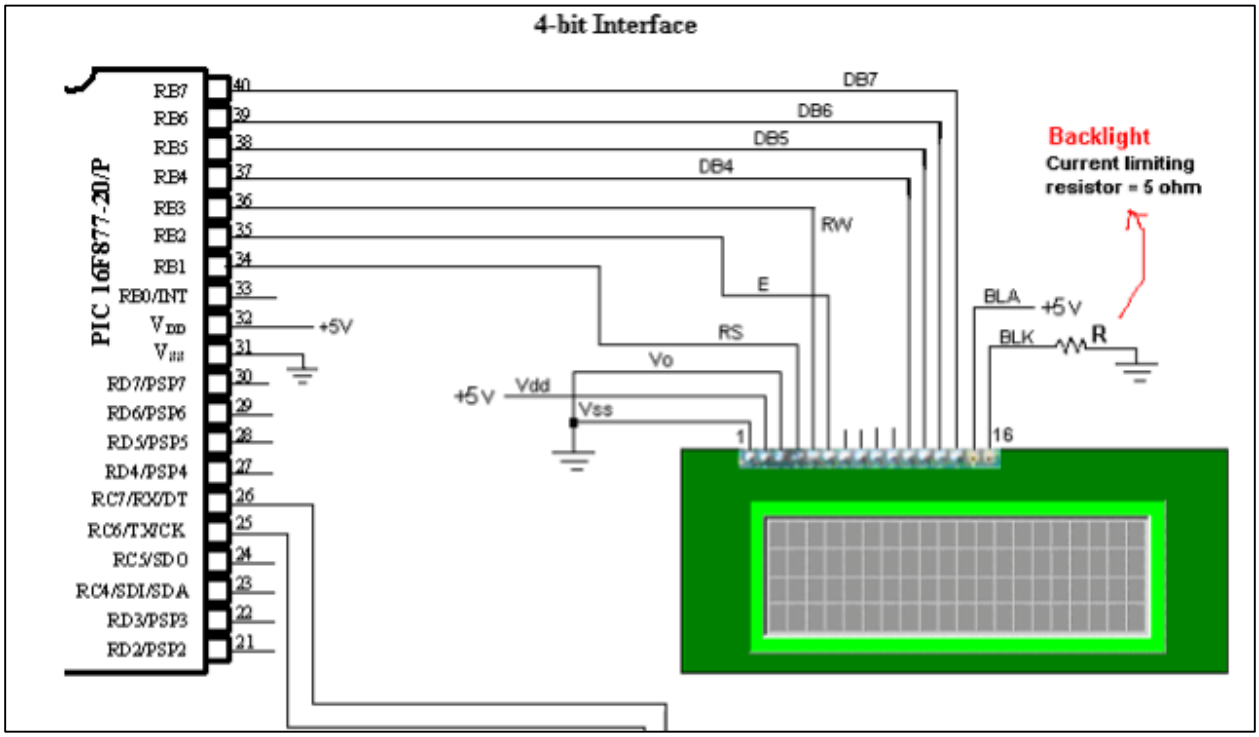

The LCD is connected to pins D7-D4, whereas E and RS are connected to pins D3, D2.

9.2.5 PIC18F4620 - MM74C922 4x4 Keypad Encoder Interface

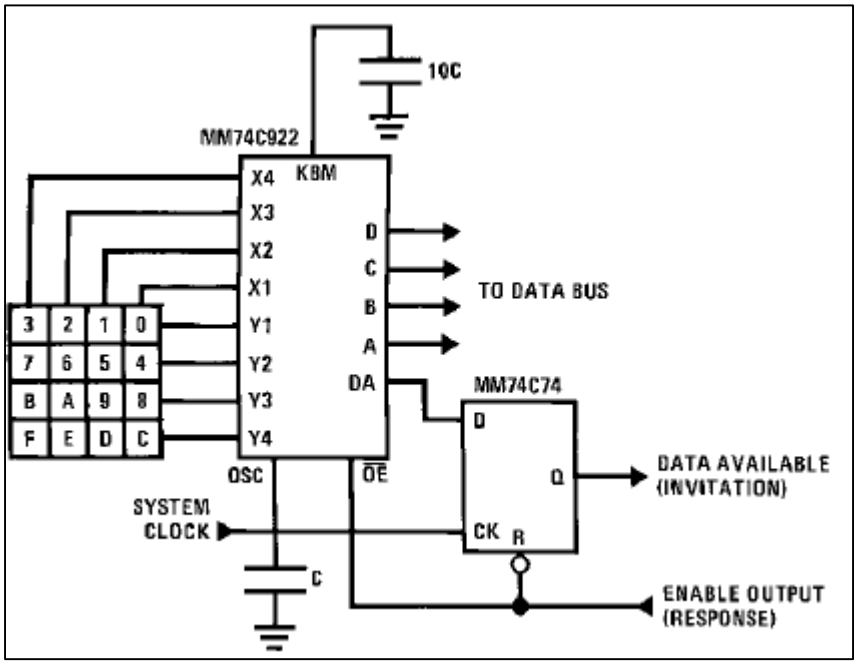

Note: A, B, C, D are connected to PINS B7-B4 whereas DA is connected to Pin B3.

The pattern that it receives from the PIC184620 is shown in Figure 666.

(Pins 0 through 11)

Switch Position		0 Y1, X1	1 Y1, X2	2 Y1, X3	3 Y1, X4	4 Y2, X1	5 Y2, X2	6 Y2, X3	7 Y2, X4	8 Y3, X1	9 Y3, X2	10 Y3, X3	11 Y3, X4
DATA OUT	A	0	1	0	1	0	1	0	1	0	1	0	1
	B	0	0	1	1	0	0	1	1	0	0	1	1
	C	0	0	0	0	1	1	1	1	0	0	0	0
	D	0	0	0	0	0	0	0	0	1	1	1	1
	E (Note 1)	0	0	0	0	0	0	0	0	0	0	0	0

(Pins 12 through 19)

Switch Position		12 Y4, X1	13 Y4, X2	14 Y4, X3	15 Y4, X4	16 Y5(Note 1), X1	17 Y5 (Note 1), X2	18 Y5 (Note 1), X3	19 Y5 (Note 1), X4
DATA OUT	A	0	1	0	1	0	1	0	1
	B	0	0	1	1	0	0	1	1
	C	1	1	1	1	0	0	0	0
	D	1	1	1	1	0	0	0	0
	E (Note 1)	0	0	0	0	1	1	1	1

9.2.6 Reservoir Circuits

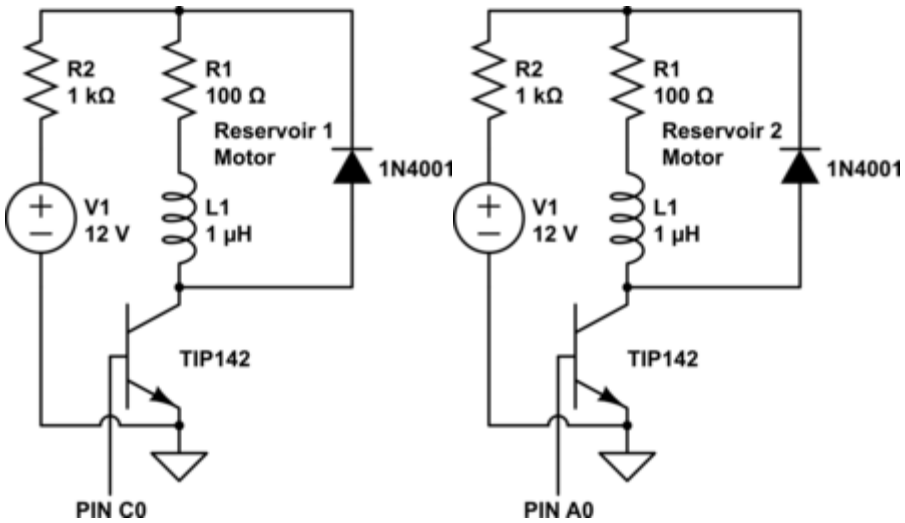

9.2.7 Solenoid Circuits

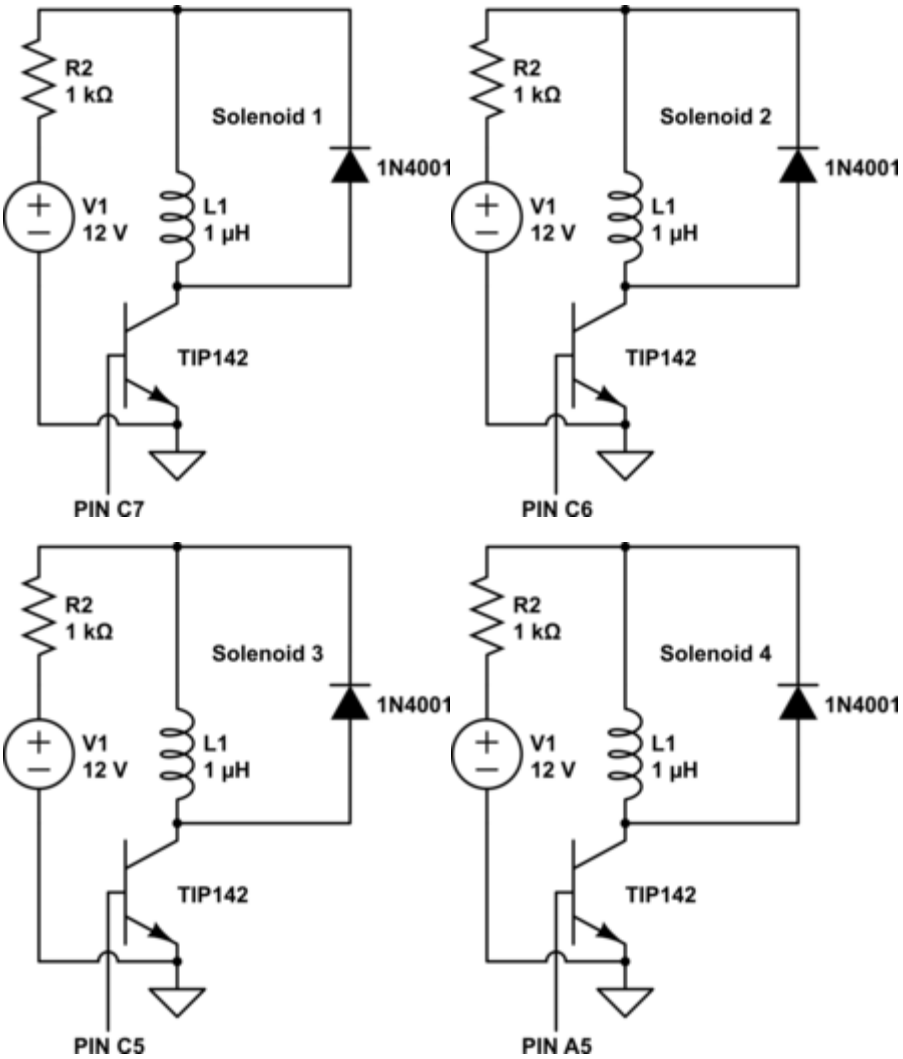

9.2.8 Dropper Circuit

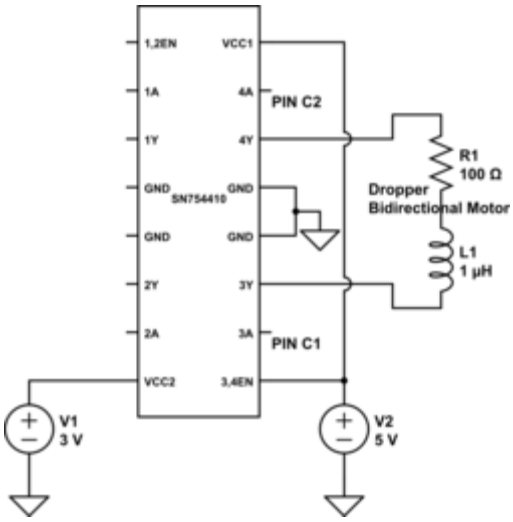

PIN C1: Clockwise Direction
Raises dropper to drop dowels into box.

PIN C2: Counter - Clockwise Direction
Returns dropper to its original position

9.2.9 Closing Wheel Circuit

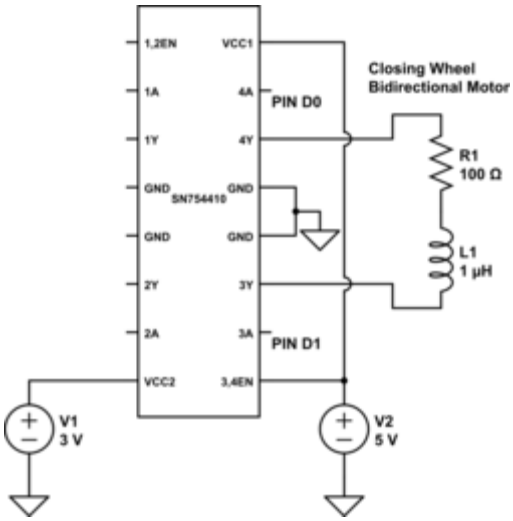

PIN D0: Clockwise Direction
Spins to drop an actuator that locks box.

PIN D1: Counter - Clockwise Direction
Spins to raise the actuator to allow next box to pass under it.

Note: The Closing Wheel was not implemented in time.

9.2.10 Microswitch Circuits

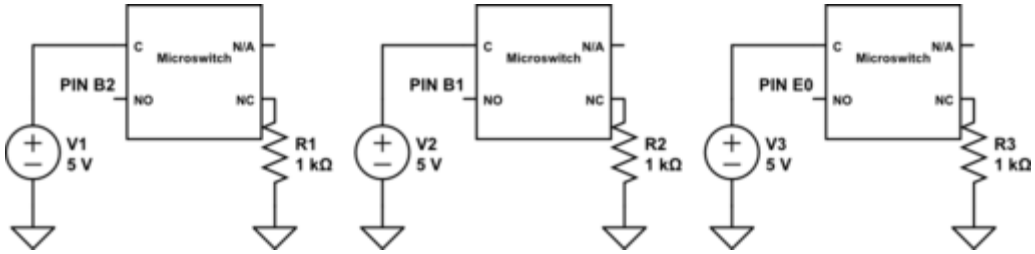

When not closed, the microswtich connects 5V to ground through the NC pin to prevent any floating current.

When closed, the microswtich sends 5V to the PIC18F4620 microcontroller through pins B2, B1, and E0. Pins B2 and B2 activates the interrupt service routine of the microcontroller to keep track of number of dowels entering the robot. Pin E0 allows the microcontroller to stop the Dropper Circuit as the Dropper has reached its proper position.

Note: The Micro Switches were not implemented in time.

9.2.11 DS1307 Real Time Clock Circuit

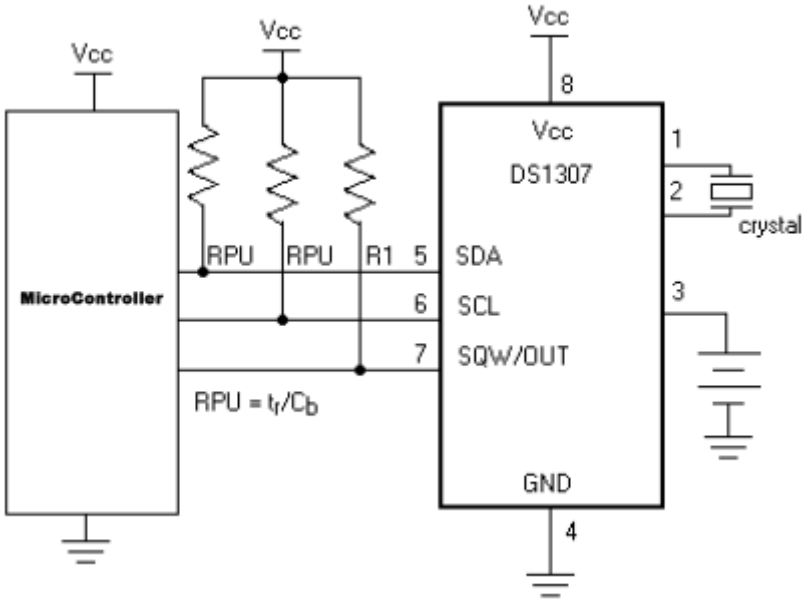

Note: DS1307 SDA and SCL pins are connected to PIN C4 (SDA) & PIN C3 (SCL) whereas SQW/OUT pin is not needed in this design.

Note: The DS1307 was not implemented in time.

9.2.12 Pololu #1200 Stepper Motor Circuit

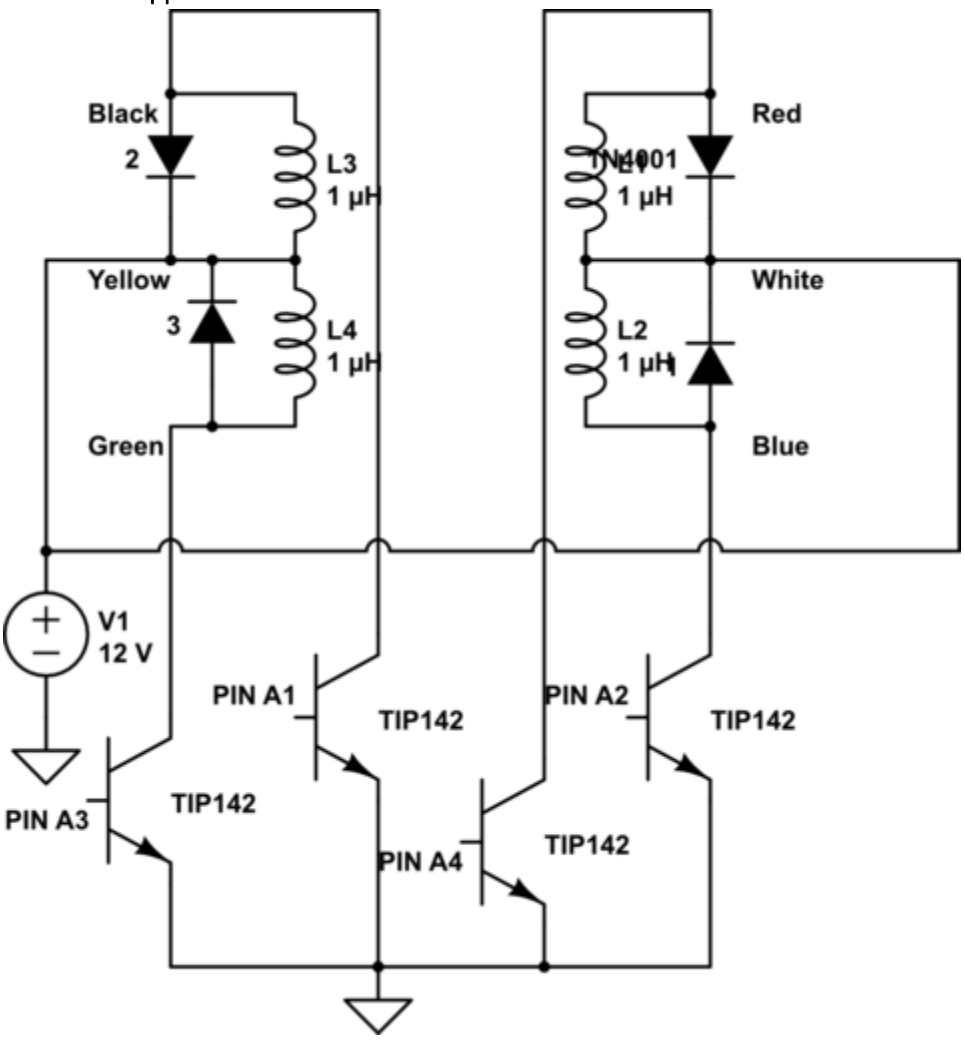

This Stepper Motor Circuit allows the Micro-Controller to actuate it in 3 different ways.
1: Power Stepping
2: Single Stepping
3: Half Stepping

It does so by consecutively connecting each pins to ground.
The routine for Single Stepping are:
A1-> A2 -> A3 -> A4 -> A1

9.2.13 Power Calculations

Device	Voltage (V)	Resistance (Ohm)	Current (A)	Power (W)
Reservoir DC Motor 1	3	2.4	1.25	3.75
Reservoir DC Motor 2	3	2.4	1.25	3.75
Solenoid 1	12	25	0.48	5.76
Solenoid 2	12	25	0.48	5.76
Solenoid 3	12	25	0.48	5.76
Solenoid 4	12	25	0.48	5.76
Stepper Motor	12	160	0.075	0.9
Microswitch 1	5	1000	0.005	0.025
Microswitch 2	5	1000	0.005	0.025
Microswtich 3	5	1000	0.005	0.025
Dropper DC Motor	3	2.4	1.25	3.75
Wheel DC Motor	3	2.4	1.25	3.75
PIC18F4620	5	166	0.03	0.15
Total Maximum Power Needed				21.86
Note: Only one solenoid is one at any given time.				

Maximum Power needed at any given time = 21.86 W

9.2.14 Suggestions for Improvement

The microcontroller should be provided with sufficient capacitors, and a circuit design with a very isolated signal for the microcontroller to prevent it from resetting due to various actuators drawing all the current away from it. This error caused the microcontroller to reset when the motors are drawing too much current due to increased load held by the motors.

9.3 MICROCONTROLLER

9.3.1 Approach

The microcontroller is the brain of the Codename Dowelbot. It is in charge of all controls and communications that occur within the robot. Below are the various problems that the microcontroller face.

9.3.1.1 Design Problem 1: Displaying Information to the User

The microcontroller itself outputs voltages from 0 to 5 volts. It needs to have some way of displaying information to the user.

9.3.1.2 Design Problem 2: Receiving Input from the User

The microcontroller itself inputs voltages between 0 and 5 Volts. It needs to be able to accept precise information on dowel patterns from the user with an easy to use user interface.

9.3.1.3 Design Problem 3: Storing and Retrieving Patterns, Time of Operation and Remaining Number of Dowels

The microcontroller needs to be able to easily store from and retrieve to the user dowel patterns, time of operation, and number of dowels remaining information for each reservoir.

9.3.1.4 Design Problem 4: Drive Actuation Systems as Required

The microcontroller is responsible for initiating, terminating, and coordinating actuators to perform tasks successfully. These tasks are described in Section 6: Electromechanical Systems.

9.3.2 Liquid Crystal Display (LCD)

The microcontroller displays information to user by interfacing with the LCD. The LCD enables microcontroller to send binary information to enable the LCD to display ASCII characters to the user.

A look-up table is implemented to enable the micro-controller to output strings instead of characters. This is done as shown in the A) LCD Code section of Appendix: Final Report Code.

```
Welcome_Msg:

        dw "Press any key", 0
```

9.3.3 4x4 KEYPAD

The 4x4 KEYPAD is a multi-array switches that allows the microcontroller to detect one of the 16 buttons that a user presses. By assigning different roles to each of the 16 buttons, the 4x4 KEYPAD allows the microcontroller to interact with the user in 16 different ways.

The microcontroller detects keypad input by polling on PORTB, 3 where the M74C922 Data Available (DA) pin is connected to. Once detected, the micro-controller detects which key is pressed, as shown in the B) KEYPAD Code section of Appendix: Final Report Code.

9.3.4 DS1307 Real Time Clock, Microswitches

The microcontroller is capable of storing information in EEPROM, registers, ROM, and RAM. It stores information in the form of hexadecimal, binary, or integers. The PIC18F4620 has timer interrupts that enables it to keep track of time operation. In addition, the DS1307 Real Time Clock chip enables the microcontroller to keep track of real time via I^2C communication. Each time new dowels are thrown into the robot, the dowels collide with a micro switch that sends an interrupt signal to the microcontroller. The microcontroller keeps track of the number of dowels based on the number of interrupts caused by the dowels.

The storage of dowel pattern information into the EEPROM is shown in the C) Storage Information section of the Appendix: Final Code

Note: The microswitches and RTC clock were not implemented in time.

9.3.5 TIP142 NPN Transistor

The microcontroller begins actuation of an actuator by switching on the TIP142 transistor connecting the actuator to ground. It switches on the TIP142 transistor by sending a signal of 1 to it and terminates the actuator by sending a signal of 0 to the TIP142 transistor, which turns the transistor off. As the actuator is not connected to ground, no current passes through it. Therefore, the actuator does not actuate.

It actuates the transistor using the simple

bsf PORTX, x ; where Xx is the pin that the actuator is connected to. For example, Solenoid is connected to C7.

It contracts (activates) the solenoid, delays for a few seconds and deactivates using.

bsf PORTC, 7 ; contracts solenoid to allow current dowel to drop.
Delay2s ; give it 2 seconds to drop
bcf PORTC, 7 ; extends solenoid to prevent next dowel from dropping.

9.3.6 Calculations

9.3.6.1 Delay

All delays were done using number of program instruction calculations.

; 20 MHz -> 1 instruction = 0.2us (microseconds)

For 100 us delay, need 100/0.2 = 500 instruction cycles

movlw 0xA5 ; 165 ; add 1 line to waste 1 instruction for easier division -> 496 - 1 = 495

movwf temp;

DELAY:

```
        decfsz temp
        goto DELAY
        return
```

Ttotal = (1movwf) + 3(decfsz + goto) ((value of w) + 1(skip) + 2(return) = 500

Value of w = 495/3 = 165

Thus, w = 15.

This results in 500 instruction cycles which is a 100 us delay.

9.3.7 Program Code

The code flows from top to bottom as follows:

Configuration Bits

Variables

PIC18F4620 Initialization

Set Input, Output, and Special Purpose Ports

Look Up Table for LCD

A) Standby:

This is where the program restarts and waits for user to input key to begin program.

B) Pattern_Menu:

This is where the program stores patterns input by user. The user is able to type any of the 6 different patterns using KEYS 1-6.

C) Operation:

This is where the program begins operation

1. Starts Timer
2. Activates Reservoirs
3. Retrieves First Pattern
4. Activates Solenoids based on pattern
5. Activates Dropper
6. Spins Carousel 120 degrees to get to second box position.
7. Retrieves Second Pattern
8. Repeat steps iv) and v)
9. Spins Carousel 120 degrees to latch and drop off current box.
10. Stops Time
11. Menu Display, user can choose to retrieve information regarding number of dowels available, operation time, dowel pattern information, or return to Standby.

9.3.8 Debug Program Code

As shown in Appendix: Debug Program Code

Different keys activates different actuators for testing.

The code flows from top to bottom as follows:

Configuration Bits

Variables

PIC18F4620 Initialization

Set Input, Output, and Special Purpose Ports

Look Up Table for LCD

A) Standby:

This is where the program restarts and waits for user to input key to begin program.

B) Pattern_Menu:

C) Pattern_Menu2:

This is where any of the 8 keys above will activate each different actuator:

Key 1: Dark Solenoid Top

Key 2: Dark Solenoid Bottom

Key 3: White Solenoid Top

Key 4: White Solenoid Bottom

Key 5: Stepper Motor 60 Degrees

Key 6: Stepper Motor 360 Degrees

Key A: Reservoirs (Hit A again to stop)

Key B: Dropper

It returns to Pattern_Menu2 upon completion.

9.3.9 Suggestions for Improvement

A program for debugging should have been written much earlier as shown in Appendix Debug Program. The Debug Program idea was only sparked at the last few days of integration. This program was extremely helpful during the integration phase.

10 INTEGRATION

10.1 DISCUSSION

The first part fully integrated into the machine was the gate mechanism. Since this was a simple binary operation, the integration of this actuator with the circuits was quite simple. There was some difficulty determining the operation limits of the actuators, but that was handled before the mechanism was mounted on the robot.

The motor for the dropper was also quite simple. Originally, the motor was going to be operated using precise delays and/or with the help of a microswitch to determine when the dropper was fully lowered. Issues occurred with the functionality of the microswitch, and in the end, a physical solution turned out to be the easiest and most reliable. A single piece of matboard below the pulley ensured that when the motor was lowering the floor, it would not start pulling it back up by over rotating in the opposite direction.

The stepper motor required some work during integration as the original was not powerful enough to move the carousel. Because of the modularity of the stepper motor mount, it was not too difficult to replace the motor. The calibration of the stepper was something that was not fully completed to ensure that the second box. An alternate way to align the second box would be to fix the program, then move the physical walls for the boxes on the platforms.

The biggest issue in debugging was the reservoirs. They had several successful runs, but were never working consistently. Problems encountered include the leads breaking, the PIC restarting due to the load on the motors and problems with functionality when power was switched from batteries used for testing to the power supply. In the end, batteries proved to be more consistent, but put the robot overweight.

Another large issue was the weight. During the integration phase, the robot was brought down from 9 kg to approximately 6 kg.

Microswitches at the top of the receptacles were put into place, but the circuitry was never completed for them.

Messy circuits also led to confusion and short circuits that needed to be debugged.

10.2 Holistic Suggestions for Improvement

The number one improvement that could be made to the robot would be to increase the power of the reservoir motors. They saw a wide range of speeds with different loads on them. An increase in both gear ratio and voltage would increase their power while maintaining the ideal speed. Also, using the power supply would reduce weight and increase consistency, reducing the problems encountered with dying batteries. Additionally, more sensors to verify the proper operation of the system would be beneficial. This would allow the robot to be smarter, and rely less on hard coding the delays of the systems. Several components of the structure could be reduced from 2x1 to 1x1 lumber to reduce the weight of the system.

11 ACCOMPLISHED SCHEDULE

ID	Task Name	Start	Finish
1	Role Assignment	1/7/2013	1/7/2013
2	Goal Discussion	1/7/2013	1/9/2013
3	Ideation Phase	1/9/2013	1/14/2013
4	Initial Mechanical Design Survey	1/16/2013	1/19/2013
5	Conceptual Design	1/16/2013	1/21/2013
6	Proposal	1/24/2013	1/27/2013
7	Material/Component Acquisition	1/30/2013	2/6/2013
8	PIC/Circuits Integration	2/27/2013	3/6/2013
9	Electromech/Circuits Integration	3/6/2013	3/13/2013
10	Functionality	3/13/2013	3/20/2013
11	Debugging	3/20/2013	4/10/2013
12	**Microcontroller**	**1/23/2013**	**2/27/2013**
13	High Level Program Flowchart	1/23/2013	1/28/2013
14	Program Pseudocode	1/28/2013	2/1/2013
15	LCD/Keypad Interfacing	2/1/2013	2/6/2013
16	PWM	2/6/2013	2/13/2013
17	General Actuation Logic	2/6/2013	2/13/2013
18	Stepper Motor Logic	2/13/2013	2/20/2013
19	Dowel Counting Logic	2/13/2013	2/20/2013
20	Timing	2/13/2013	2/20/2013
21	Date & Time	2/20/2013	2/27/2013
22	Debugging & Additional Features	2/20/2013	2/27/2013
23	**Circuits**	**1/26/2013**	**2/13/2013**
24	Electrical Design	1/26/2013	1/30/2013
25	Complete Circuit (Signal) Analysis	1/30/2013	2/6/2013
26	Actuation Circuit on Breadboard	1/30/2013	2/6/2013
27	Complete Circuit on Breadboard	2/6/2013	2/13/2013
28	Circuit Debugging Tools	2/6/2013	2/13/2013
29	**Electromechanical**	**1/30/2013**	**2/27/2013**
30	Machine Frame/Structure	1/30/2013	2/6/2013
31	Dowel Reservoirs	1/30/2013	2/6/2013
32	Dispensing Mechanism	2/6/2013	2/13/2013
33	Carousel & Pipe	2/6/2013	2/13/2013
34	Pickup Box	2/6/2013	2/13/2013
35	Closing Mechanism (Wheel & Wire)	2/13/2013	2/20/2013
36	Dowel Opening & Spinning Mechanism	2/20/2013	2/27/2013

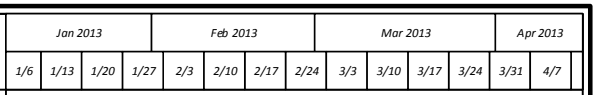

12 Conclusions

In conclusion, this robot uses 8 actuators, a circuit system controlled by a PIC microcontroller, and various physical mechanisms to orient and dispense up to 24 dowels into up to 3 boxes, and then proceeds to close those boxes.

13 Standard Operating Procedure

13.1 Loading the Boxes

1. Load the first box into its slot by sliding it up the platform, with the lid closed and hinges facing inwards, so that it is touching all 3 walls of the platform.
2. Next, open the lid so that it latches on to the back wall on the platform.
3. Repeat steps 1-2 for the other 2 boxes, in the order specified by the numbers on the platforms. Note that the lid of the 3rd box will be resting on top of the lid of the 2nd box. This is because the 3rd box will be closed before the 2nd.

13.2 Orienting the Carousel

4. Rotate the carousel at least 90 degrees counterclockwise until the first box is precisely lined up with the dropping tubes. Do not rotate it clockwise as this will cause the castors on the carousel to be facing the wrong direction, and the carousel will not move smoothly at the beginning.
5. The next step involves aligning the spokes of the stepper mechanism with the screw in the carousel. Only a small, counterclockwise adjustment will be needed to ensure that they are in contact, ensuring that the stepper will begin moving the carousel immediately.

13.3 Orienting the Dropper Motor

6. For best results, the pulley on the dropper should be rotated clockwise until the fishing line is taught but not supporting the dropper floor. This ensures that when the motor is engaged, it will raise the floor without delay.

13.4 Loading the Dowels

7. Simply dump the dowels into their respective reservoirs, which are labeled white and brown. Orientation is not important, but care should be taken not to load too many near the dowel separator, which would increase the risk of jamming. Ensure there are enough dowels to complete the desired patterns.

13.5 Operation

8. Connect the power supply to the robot. The LCD should light up as soon as there is power.
9. As per the message on the LCD, press any key on the keypad to begin the program.
10. Press 1-6 on the keypad to select the first pattern to be loaded.

11. Press B on the keypad to enter another pattern.
12. Repeat steps 10-11 to input up to 3 patterns to be loaded. This machine does not have the capability of loading more than 3 boxes.
13. To begin operation, hit A on the keypad.

14 BIBLIOGRAPHY

[1] "AER201 Vial Sorting Machine," [Online]. Available: http://www.youtube.com/watch?v=F1g0mAieCoo. [Accessed 30 January 2013].

[2] "BCX 51-16 E6327," [Online]. Available: http://www.digikey.com/product-detail/en/BCX%2051-16%20E6327/BCX%2051-16%20E6327DKR-ND/3819878. [Accessed 30 January 2013].

[3] "Box Sealer Machine," [Online]. Available: http://www.youtube.com/watch?feature=player_detailpage&v=Cdi1NtAlfG0#t=44s~0:45. [Accessed 30 January 2013].

[4] "Cosmetic Packaging Machine," [Online]. Available: http://www.youtube.com/watch?v=Gs60kAIosa8. [Accessed 30 January 2013].

[5] "Diadem- Parcel Sorter," [Online]. Available: http://www.youtube.com/watch?v=6mrcwtmkv54. [Accessed 30 January 2013].

[6] "Dowel - 10 Uses For A Wooden Round Rod," [Online]. Available: http://www.dowel.com.au/dowel-10-uses-for-wooden-round-rod/. [Accessed 30 January 2013].

[7] "Dowelmax 3/8" Standard Kit Order," [Online]. Available: http://www.dowelmax.com/standard-order.html. [Accessed 30 January 2013].

[8] "Electric Generator," [Online]. Available: http://www.miniscience.com/projects/KITWG/index.html. [Accessed 30 January 2013].

[9] "Emergency Stop," [Online]. Available: http://www.securitysafetyproducts.co.uk/images/products_image2-1229-d.jpg. [Accessed 30 January 2013].

[10] "Empty Bottle Unscrambler 整列機 PC2000A," [Online]. Available: http://www.youtube.com/watch?v=6R9dzmeyvRI. [Accessed 30 January 2013].

[11] "Faber-Castell pencil production (c) telefilm filmproduktion Nürnberg," [Online]. Available: http://www.youtube.com/watch?v=Zsnw98aTWOM. [Accessed 30 January 2013].

[12] "Future Of Packaging Industry," [Online]. Available: http://www.globalchange.com/future-of-packaging-industry.htm. [Accessed 30 January 2013].

[13] "How to make a simple box dispenser.," [Online]. Available: http://www.youtube.com/watch?v=27Gk3Vzxw8w. [Accessed 30 January 2013].

[14] "M1088 Automated Small Box Loading Machine," [Online]. Available: http://www.youtube.com/watch?v=KaV-cYoZv-U. [Accessed 30 January 2013].

[15] "Machine for orienting containers," [Online]. Available: http://www.google.com/patents?id=_toMAAAAEBAJ&pg=PA2&source=gbs_selected_pages&cad=4. [Accessed 30 January 2013].

[16] "Mark IV Tilt Sorter," [Online]. Available: http://www.youtube.com/watch?v=GZRkrfaBIiM. [Accessed 30 January 2013].

[17] "MC3303DT," [Online]. Available: http://www.digikey.com/product-detail/en/MC3303DT/497-4050-6-ND/2506064. [Accessed 30 January 2013].

[18] "MIC94053YC6 TR," [Online]. Available: http://www.digikey.com/product-detail/en/MIC94053YC6%20TR/576-2939-1-ND/1822099. [Accessed 30 January 2013].

[19] "PIC18F4620-I/P," [Online]. Available: http://www.digikey.com/product-detail/en/PIC18F4620-I%2FP/PIC18F4620-I%2FP-ND/613256. [Accessed 30 January 2013].

[20] "Staedtler Pencil Manufacturing," [Online]. Available: http://www.youtube.com/watch?v=olPykARjbGw. [Accessed 30 January 2013].

[21] "tray sealing machine," [Online]. Available: http://www.youtube.com/watch?v=_KNlEfhQf28. [Accessed 30 January 2013].

[22] "Wood Joinery - Methods for Connecting Wood," [Online]. Available: http://woodworking.about.com/od/joinery/p/Doweling.ht. [Accessed 30 January 2013].

[23] R. Emami, "RFP," [Online]. Available: http://aer201.aerospace.utoronto.ca/projects/project3.htm. [Accessed 30 January 2013].

15 APPENDICES

15.1 PROGRAM CODE

```
;-----------------------------------------------------------------
; Practice 20: Actual Code On Progress Four on PIC18F4620
; Written By : Soon Chee Loong
; Accomplish: ??
;
;
;-----------------------------------------------------------------
; Need to Work On:
; 10. Flipper Motor (work out delay timing)
; 1. Timer, Real Time, use rtc clock, basically get current time, and get current time after operation and
deduct to find actual time and display number on LCD.
; 2. Number of dowels
; 3. Dowels pattern to display
; 9. Microswitch Interrupt Service Routine at Port B7-B4, Change Keypad to Pins E..., it gets activated
when pin b changes state
        ; B0, B1 -> Microswitch input with interrupts(according to yihtang, double check!)
; 7. Counting number of dowels using interrupts.
; 12. Change code to suit new stepper motor and box arrangments
                ; INITIAL : 1. box (won't drop cause lid opens), 2 box, 3 empty, 4 box (dowels drop), 5
wire close, 6 shut, 1. drop

;               i)  Dowel Dropping
;               ii) Move twice -> 1st box: shuts, 2nd box: dowel drop
;               ii) move once -> 3rd box: (don't account for 3rd box)
;               iii)
;               iv)
;               v)
;               vi)
;-----------
; DONE
; 4. Changing Ports to actual ports
        ; C2, C1 => Bidirectional motor  DONE     (BROWN)
        ; D7-D4 => LCD, D3,D2 => E, RS   DONE     (ORANGE)
        ; B7-B4 => Keypad              DONE     (GREEN)
        ; B3 => Keypad Enable Bit       DONE         (GREEN)
        ; C7-C4 => Solenoids           DONE         (RED)
                ; C7 =
                ; C6 =
                ; C5 =
                ; C4 =
        ; C3, C0 => both motors                DONE                    (BLUE)
        ; A4-A1 => Stepper Motor               DONE                    (WHITE)
; 5. Including Stepper Motor
```

```
; 6. Changing Code Flow to actual Flow
; 8. Move Solenoids, First check that 2 motors start spinning
; 11; BUG: Never goes to Ejector cause something wrong with eeprom or something. it always has
BWBWBW regardless of input
                ; Did not save w to pattern before pattern encoding
                ; Did not decrement number of patterns.

        list p=18f4620                  ; list directive to define processor
        #include <p18f4620.inc>         ; processor specific variable definitions
;-----------------------------------------------------------------
;Configuration Bits
;-----------------------------------------------------------------
                CONFIG OSC=HS, FCMEN=OFF, IESO=OFF
                CONFIG PWRT = OFF, BOREN = SBORDIS, BORV = 3
                CONFIG WDT = OFF, WDTPS = 32768 ;
                CONFIG MCLRE = ON, LPT1OSC = OFF, PBADEN = OFF, CCP2MX = PORTC
                CONFIG STVREN = ON, LVP = OFF, XINST = OFF
                CONFIG DEBUG = OFF
                CONFIG CP0 = OFF, CP1 = OFF, CP2 = OFF, CP3 = OFF
                CONFIG CPB = OFF, CPD = OFF
                CONFIG WRT0 = OFF, WRT1 = OFF, WRT2 = OFF, WRT3 = OFF
                CONFIG WRTB = OFF, WRTC = OFF, WRTD = OFF
                CONFIG EBTR0 = OFF, EBTR1 = OFF, EBTR2 = OFF, EBTR3 = OFF
                CONFIG EBTRB = OFF
;-----------------------------------------------------------------
;Declare unbanked variables (at 0x70 and on)
        cblock  0x70
                COUNTH                  ;used in delays
                COUNTM                  ;used in delays
                COUNTL                  ;used in delays
                Table_Counter
                lcd_tmp
                lcd_d1
                lcd_d2
                com
                dat
                num_patterns
                pattern
                num_dowels
                div_tmp                 ;used in dividing
                div_ans         ;answer of the divide function
                num_white_dowels ; Keeps track of number of white dowels in reservoir
                num_black_dowels ; Keeps track of number of black dowels in reservoir
                delay1s_1
                delay1s_2
                delay1s_3
                tempwsaveregister; DEBUG: save w for debugging
                ; Interrupt variables
```

```
                W_TEMP
                STATUS_TEMP
                BSR_TEMP
        endc

;-----------------------------------------------------------------
;Declare constants for pin assignments (LCD on PORTD)
                #define RS      PORTD,2
                #define E       PORTD,3

      ORG     0x0000    ;RESET vector must always be at 0x00, when pic restarts, it gets here.

                 goto     init      ;Just jump to the main code section.

                 org         0x08 ; high priority interrupt handler
                 goto HighPriorityInterruptHandler

                        ;                    org 0x18  ; will only be executed if NOT in compatibility mode
                        ;                    goto LowPriorityInterruptHandler
;-----------------------------------------------------------------
; Delay: ~160us macro
;-----------------------------------------------------------------

; This macro delays the LCD by 255 instructions on 20 MHZ clock.

LCD_DELAY macro ; copy this whole macro till endm by just writing LCD_DELAY at bottom,
                                ; macro means inline code, it will just copy paste into whatever section.
        movlw   0xFF    ; 11111111
        movwf   lcd_d1  ; lcd_d1 has the value
        decfsz  lcd_d1,f ; decrement lcd_d1 by 1, skip next line if 0.
        goto    $-2
        endm

; To display strings in PIC18F4620
;-----------------------------------------------------------------
; Display macro
;-----------------------------------------------------------------
Display macro   Message  ; call by typing Display "Command Line Argument", see example below, it uses
look up tables
                ; Declare local subfunctions
                local     loop_   ; local labels are part of the macro, cause word local, it is inline, so can't
be non-local,
                                        ; if it is non-local, the same loop_ will get copied many times
resulting in
                                        ; runtime error.
                                                ; when have label/subfunction in macro, need local.
                local     end_
                movlw  LOW(Message) ; Message is command line argument,
```

```
                movwf  TBLPTRL     ; moving value of low to a special register called TBLPTRL, Table
Pointer Low
                movlw  HIGH(Message)
                movwf  TBLPTRH                    ; Table Pointer High
                movlw  UPPER(Message)
                movwf  TBLPTRU ; Table Pointer Upper
loop_
                tblrd     *+   ; read into TABLAT and increment, command to look at address, put into SPR
TABLAT, increment and read it.
                movf    TABLAT, W ; get data into working register
                xorlw   B'00000000' ;check WORK reg to see if 0 is returned, 0 => end of string, xor : 00
&& 11 => 0, 10 && 01 => 1; only returns 0 if all 0.
                btfsc   STATUS,Z ; ; check last instruction (xor) to see if 0 was return, if it is 0, execute
next line, if not, skip.
                goto    end_
                call    WR_DATA ; write data into LCD
                goto    loop_
end_
                endm

;-----------------------------------------------------------------
; Initialize PIC
;-----------------------------------------------------------------
init
                        ; TODO: ENABLE GLOBAL INTERRUPT
                        ; TODO: ENABLE  "ENABLE FLAG" FOR B0 and B1, if flag bit is 1, then there is an
interrupt. I will only jump to interrupt vector if interrupt is enabled
                        ; TODO: Enable interrupt on positive edge for both interrupts.
                        ; TODO: Clear interrupt flag bits before operation begins.
                        ; INT1P -> Interupt priority,
                        ; INT1F -> Flag becomes 1 when hardware interrupt occurs
                        ; INT1D -> enables this interrupt to occur

; CHANGE THIS INTCON LINE AS YOU"RE USING INTERRUPTS!!!!!, build interrupt debouncing circuit.
                clrf    INTCON                    ; Disable all interrupts!! Pg95/390 of datasheet
      bsf       STATUS,0        ; select bank 1, NOT SURE IF STILL APPLICABLE , a carry out occur if set C
on STATUS to 1.
; Analog to Digital
; movlw0x0F               ; 00001111
;movwf ADCON1                    ; set PORTA to digital

; Comparators
;                movlw 0x0F              ; configure comparators
;                movwf CMCON                       ; for digital input

; Set Inputs/Outputs (TRISX)
      clrf      TRISA   ; 00000000 -> A4-A1 => Stepper Motor
      movlw     b'11111110'     ; Set required keypad inputs
```

```
                                                ;---------------------------
                                                ;DEBUG
                                                ;                                        clrf TRISB
        movwf       TRISB ; 11111110 -> B7-B4 Keypad Inputs, B3 => Keypad Enable
                    clrf      TRISC      ; 00000000 -> C7-C4 Solenoids, C3,C0 => Both Motor, C2,C1 =>
Bidirectional motor
                    clrf      TRISD              ; 00000000 -> D7-D4 LCD Data, D3,D2 E & RS for LCD
                    movlw b'011'                 ; Set required microswitch inputs
                    movwf TRISE                  ; microswtich input

                   ; EEPROM
                    clrf      EEADRH                     ; point at address 00h for EEPROM (ranges from 00h to
33Fh)
                    clrf      EEADR              ; EEADRH and EEADR holds the address of EEPROM being
accessed

        bcf         STATUS,0   ; select bank 0, NOT SURE IF STILL NEEDED
; Set Initial Output Voltage
        clrf        PORTA ; Don't drive motor
        clrf        PORTB ; Don't accept any initial input from KEYPAD
        clrf        PORTC ; Don't contract any solenoids, Don't move any motors
        clrf        PORTD ; Don't write anything on LCD
                    clrf   PORTE ; Don't accept any microswitch input

                    call      InitLCD    ;Initialize the LCD, subroutine at bottom.
                    goto      Standby    ; goto Standby

;-----------------------------------------------------------------
; Look up table
;-----------------------------------------------------------------
Real_Time:
                   dw                "17:04", 0                          ; temporary
Welcome_Msg:
                   dw                "Press any key", 0
Pattern_Select1:
                   dw                "Press 1-6 to",0
Pattern_Select2:
                   dw                "Select a pattern", 0
Start_Operation:
                   dw                "A) Start", 0
New_Pattern:
                   dw                "B) Add pattern", 0
Completion_Msg1:
                   dw                "Operation complete. A) Operation Time.", 0
Completion_Msg2:
                   dw                "B) Pattern Info C) Dowel Count, D) Exit.", 0
Key_Continue:
                   dw                "Press any key.",0
```

```
Light_Count:
                dw              "White Dowels:  9",0
Dark_Count:
                dw              "Brown Dowels: 3 ",0
Prev_Patterns:
                dw              "Prev Patterns:",0

; Start & Stop Message
Start_Reservoirs:
                dw              "Res Activated", 0
Start_Stepper_Motor:
                dw              "Step Motor Activated", 0
Start_Solenoids:
                dw              "Sol Activated", 0
Start_Flipper_Forward:
                dw              "Flip Forward Activated", 0

Start_Flipper_Backward:
                dw              "Flip Backward Activated", 0

Stop_Reservoirs:
                dw              "Res Terminated", 0
Stop_Flipper_Forward:
                dw              "Flip Forward Terminated", 0
Stop_Flipper_Backward:
                dw              "Flip Backward Terminated", 0

Close_Last:
                dw              "Close Last Box", 0

Drop_Last:
                dw              "Drop Last Box", 0

; Debug Message

Solenoid_White_Debug1:
                dw              "Solenoid W T C", 0 ; Solenoid White Top Contract
Solenoid_White_Debug2:
                dw              "Solenoid W T E", 0 ; Top Extend
Solenoid_White_Debug3:
                dw              "Solenoid W B C", 0 ; Bottom Contract
Solenoid_White_Debug4:
                dw              "Solenoid W B E", 0 ; Bottom Extend
Solenoid_Black_Debug1:
                dw              "Solenoid B T C", 0 ; Solenoid Black Top Contract
Solenoid_Black_Debug2:
                dw              "Solenoid B T E", 0
Solenoid_Black_Debug3:
```

```
                dw              "Solenoid B B C", 0
Solenoid_Black_Debug4:
                dw              "Solenoid B B E", 0

Stepper_Motor_Debug1:
                dw              "Before Stepper Motor", 0
Stepper_Motor_Debug2:
                dw              "After Stepper Motor", 0

Stepper_Motor_Debug3:
                dw              "Stepper Motor 32", 0
Stepper_Motor_Debug4:
                dw              "Stepper Motor 200", 0
Stepper_Motor_Debug11:
                dw              "Stepper Motor 1", 0
Stepper_Motor_Debug12:
                dw              "Stepper Motor 2", 0
Stepper_Motor_Debug13:
                dw              "Stepper Motor 3", 0
Stepper_Motor_Debug14:
                dw              "Stepper Motor 4", 0
Stepper_Motor_Debug15:
                dw              "Stepper Motor 5", 0
Stepper_Motor_Debug16:
                dw              "Stepper Motor 6", 0

OPTIMEFINAL
                dw              "Operation : 90s", 0

;-----------------------------------------------------------------
; Main
;-----------------------------------------------------------------

; Main occurs in Operation

;-----------------------------------------------------------------
;Standby Mode
;-----------------------------------------------------------------
Standby:
                call            Clear_Display
                Display         Real_Time ; NOT DONE YET
                call            Switch_Lines
                Display         Welcome_Msg
                ; Wait for Keypad to be pressed (Data Available -> B3)
                        ;----------------------------
                        ; DEBUG:
;                       movwf           tempwsaveregister
;                       movlw           B'00001000'
```

```
;                       movwf       PORTB
;                       movf        tempwsaveregister, W
                btfss       PORTB,3             ;Wait until keypad button is pressed, btfss skips
next line if 1(set)
                bra                 $-1
                        ;----------------------------
                        ; DEBUG:
;                       movwf       tempwsaveregister
;                       movlw       B'00000000'
;                       movwf       PORTB
;                       movf        tempwsaveregister, W
                btfsc       PORTB,3             ;Wait until keypad button is depressed, btfsc
skips next line if 0 (clear)
                bra                 $-1

;-----------------------------------------------------------------
; User Interface
;-----------------------------------------------------------------
                ; Clear Number Patterns to 0 patterns initially
                clrf        num_patterns ; stores number of patterns given. At least 1, max. infinity.

; This subroutine gets called in beginning for pattern 1 and might get called again later
; for pattern2. It will store both patterns in EEPROM at address 01H and 02H in the end.
; It may be repeated for a 3rd pattern too! num_patterns stores number of patterns given
Pattern_Menu:
                call        Clear_Display
                Display     Pattern_Select1
                call        Switch_Lines
                Display     Pattern_Select2
                ; Wait till the keypad is pressed before reading
                        ;----------------------------
                        ; DEBUG:
;                       movwf       tempwsaveregister
;                       movlw       B'00001000'
;                       movwf       PORTB
;                       movf        tempwsaveregister, W
                btfss       PORTB,3             ;Wait until keypad button is pressed
                bra                 $-1
                        ;----------------------------
                        ; DEBUG:
;                       movwf       tempwsaveregister
;                       movlw       B'00000000'
;                       movwf       PORTB
;                       movf        tempwsaveregister, W
                btfsc       PORTB,3             ;Wait until keypad button is released
                bra                 $-1

                ;make sure that the data entered is between 1 and 6 inclusive
```

```
                ; Note: The keypad is released already, but the keypad holds the last key pressed,
                                                                                                ; not sure
if due to keypad or MM74C922N chip.
                ; skips if B7 == 1 or if B5 and B4 are both 1 => Keypad Input given was not 1-6
                btfsc           PORTB,7
                goto            Pattern_Menu ; keep looping if B7 is not 0
                btfss           PORTB,4 ; B7 is 0, skip if B4 is 1
                goto            Store_Pattern
                btfss           PORTB,5 ; B7 is 0, skip if B5 is 1
                goto            Store_Pattern
                goto            Pattern_Menu

; Store the keypad pattern pressed onto pattern then to EEPROM
Store_Pattern:
                ;store data from keypad into memory for use during operation
                swapf           PORTB,w ; let w hold the last keypad pressed in xxxxbbbb (where bbbb is
the code for last keypad pressed)
                                ; swapf swaps B7-B4 with B3-B0 and store result in w or f if f is stated. In
this case, it stores in w.
                andlw           0x0F    ; and w with 00001111 to not let first 4 bits which does not
matter interfere, w = 0000bbbb
                movwf           pattern ; let pattern register hold the current pattern
                movlw           0x02    ;takes keypad entry and coverts it into the pattern number
                                                        ; let w = 00000010
                ; Change coded pattern for 1-3 from keypad input to their actual binary values
                cpfsgt          pattern ; compare f with W and skip if f > W , if f > W => f is more than 3
=> skip
                incf            pattern ;f < 4 since did not skip, increment f by 1 => f += 1
(00000010+00000001 = 00000011) and store result in W
                                        ; increment if input was 1-3 and not 4-6 to change the keypad
encoder binary codes
                                        ;  to actual numerical value and not keypad value
                ;write pattern to EEPROM
                incf            EEADR  ;increment data memory address by one (initially at 0x00 at
beginning of program)
                movff           pattern, EEDATA ; movff => move from file to file, in this case, move
from pattern to EEDATA
                call            Write_EEPROM ; write the first pattern at EEPROM

                ;next two lines are just to check the encoder functionality
                call            Pattern_Encoder ; when returned, 'pattern' variable holds the pattern of
the dowels based on input given
                                                                        ; 000111 => WWWBBB (W =
white, B = Black)
                ; pattern holds actual pattern to dispense dowels
;movff          pattern,PORTD ; move pattern to PORTC to output the patterns on the LEDs to see if
right
```

```
                                                        ; Debugging just to see if correct pattern was
given , have not checked!!!!!
                incf            num_patterns            ;increase the pattern count as first pattern was
given.

; Continue to get second pattern and maybe more if needed.
Pattern_Menu2
                call            Clear_Display
                Display         Start_Operation ; Press A to start
                call            Switch_Lines
                Display         New_Pattern     ; Press B to add a new pattern

                        ;----------------------------
                        ; DEBUG:
;                       movwf           tempwsaveregister
;                       movlw           B'00111000' ; A
;                       movwf           PORTB
;                       movf            tempwsaveregister, W
                btfss           PORTB,3                 ;Wait until data is available from the keypad
                bra                     $-1

                swapf           PORTB,W                 ;Read keypad from portB <7:4> into W<3:0>
                andlw           0x0F ; and W with 00001111

                ;if not given B input (0111), go back to pattern menu
                sublw           0x07  ; subtract w with 000111 and place result in w
                bz                      Pattern_Menu ; bz = branch if zero (ZERO bit is 1 => last
instruction resulted in 0), will repeat Pattern Menu
                ;if A), start operation
                sublw           0x04 ; The math used is 2... method, where it loops back in this case 3 - 7
- 4 = 0.
                bnz                     Pattern_Menu2 ; loop again if button A was not pressed (means
neither A nor B was pressed)

;-----------------------------------------------------------------
; Operation
;-----------------------------------------------------------------

; Begin operation once user press A or when 2nd pattern is given.
Operation:
; TODO:START TIMER

        ; Begin spinning reservoirs AND LET IT SPIN TILL whenever

;----------------------

; DEBUG
;       call Stepper_Motor_Once_Debug
```

```
                ;-----------------------------
                ; TEMP: Message for debugging
                call            Clear_Display
                Display         Start_Reservoirs
                call            DelayMessage
;Spin_Reservoirs:
                bsf LATC, 0
                bsf LATC, 3
                call DelayReservoirs
;----------------------
; TODO: Delay while Counting Dowels using interrupts.
;
                goto InfiniteLoop; TEST: BOTH MOTORS SPIN FOREVER , it is definitely not watchdog,
must be power supply.
; Store number of patterns into EEDATA
                movff           num_patterns,EEDATA
                incf            EEADR ; change EEPROM address
                call            Write_EEPROM ; write the number of patterns on EEPROM
                movf            num_patterns,w ; w holds number of patterns
                subwf           EEADR ; ; go to address of the last given pattern.

; Dispense box into loading area

DisperserFirstBox:
                goto BoxPositioner ; dont move stepper motor for first box.

Dispenser: ; Will come here 1st time right after above code, and right after 6 dowels are loaded onto box
(Flipper)
                        ; where it moves stepper motor once for next operation
                movlw   0x00                    ; w is 00000000
                cpfsgt  num_patterns    ; compare num_patterns with W, if f>w, skip next line
                goto    Ejector         ; will only be here with num_patterns == 0

                                                        ;               call
        Clear_Display
                                                        ;               Display
        Stepper_Motor_Debug1
                call Stepper_Motor_Once ; to move next box into place, at the same time closing the
current box.
                                                        ;       call            Clear_Display
                                                        ;       Display
        Stepper_Motor_Debug2
                call Stepper_Motor_OnceHalf ; to move the 2nd box into place, need to move stepper
motor twice.
;-----------------------------------------------------------------
; Box Positioner
;-----------------------------------------------------------------
```

```
BoxPositioner:
; Read next pattern
                call    Read_EEPROM ;read what the next pattern should be into w.
                incf    EEADR       ;increment address in the EEPROM
                movwf   pattern     ; need move from w to pattern before encoding final pattern
                call    Pattern_Encoder     ;convert pattern number to actual pattern sequence
                movlw   0x06        ;set number of dowels to 6
                movwf   num_dowels ; num_dowels stores number of dowels
                decf    num_patterns; decrement number of patterns left
Check_Box:
                movlw   0x00
                cpfsgt  num_dowels ; as long num_dowels is not 0, skip Ejector and jump to move box
                goto    Flipper ; Will only go to Dispenser once all 6 dowels are completed
; Will be here if num_dowels not 0.
;-----------------------------------------------------------------
; Dowel Sorter
;-----------------------------------------------------------------
Dowel_Sorter:
                ;check next dowel
                btfsc   pattern,0 ; will skip next line if the bit 0th bit of pattern is 0 => white
                bra             Dark_Dowel
; Move solenoids for White Dowels
Light_Dowel:
                bsf             LATC, 7
                call            Clear_Display
                Display         Solenoid_White_Debug1
                call            DelaySolenoid
                call            Clear_Display
                Display         Solenoid_White_Debug2
                bcf             LATC, 7
                call            DelaySolenoid
                call            Clear_Display
                Display         Solenoid_White_Debug3
                bsf     LATC, 6
                call            DelaySolenoid
                call            Clear_Display
                Display         Solenoid_White_Debug4
                bcf         LATC, 6
                call            DelaySolenoid
;                                                                       goto Light_Dowel ; TEST:
Test that Solenoids are opening and closing within given time frame

;ADDON: CHECK IF DOWEL IS IN BOX, REPEAT IF NOT     ;btfss PORTE,0              ;check if dowel is
in the box

        ;bra            Light_Dowel     ;repeat rod motion if dowel not in box
                decf    num_dowels      ;decrease the dowel count
                rrncf   pattern         ;shift the pattern over so the next dowel is in bit 0
```

```
                goto    Check_Box
; Move Soleniods for Dark Dowels
Dark_Dowel:
        call DelayFlipper
        call DelayFlipper
                bsf     LATC, 5
                call            Clear_Display
                Display         Solenoid_Black_Debug1
                call            DelaySolenoid
                call            Clear_Display
                Display         Solenoid_Black_Debug2
                bcf     LATC, 5
                call            DelaySolenoid
                call            Clear_Display
                Display         Solenoid_Black_Debug3
                bsf     LATC, 4
                call            DelaySolenoid
                call            Clear_Display
                Display         Solenoid_Black_Debug4
                bcf     LATC, 4
                call            DelaySolenoid
;                                                                       goto Dark_Dowel ; ;
TEST: Test that Solenoids are opening and closing within given time frame , need change to dark

;ADDON: CHECK IF DOWEL IS IN BOX, REPEAT IF NOT      ;btfss PORTE,0                  ;check if dowel is
in the box

        ;bra            Light_Dowel     ;repeat rod motion if dowel not in box
                decf    num_dowels      ;decrease the dowel count
                rrncf   pattern, 1              ;shift the pattern over so the next dowel is in bit 0 and
place result back into pattern
                goto    Check_Box

;-----------------------------------------------------------------
; Flipper
;-----------------------------------------------------------------
                ;------------------------------
                ; TEMP: Message for debugging
                call            Clear_Display
                Display         Start_Flipper_Forward
                call            DelayMessage
Flipper:
        bsf LATC, 2; move motor direction upwards
        call DelayFlipper
        bcf LATC, 2; stop it
                ;------------------------------
                ; TEMP: Message for debugging
                call            Clear_Display
```

```
                Display         Stop_Flipper_Forward
                call            DelayMessage
                ;-----------------------------
                ; TEMP: Message for debugging
                call            Clear_Display
                Display         Start_Flipper_Backward
                call            DelayMessage
        bsf LATC, 1; move motor direction downwards
        call DelayFlipper
        bcf LATC, 1; stop it
                ;-----------------------------
                ; TEMP: Message for debugging
                call            Clear_Display
                Display         Stop_Flipper_Backward
                call            DelayMessage
        goto Dispenser

;-----------------------------------------------------------------
; Box Ejector
;-----------------------------------------------------------------
; Will only come here once no more boxes needed to be loaded
; Currently, there is one box still at the dowel dispenser location. have to move it to drop it out.
Ejector:
; Stop Reservoir
                ;-----------------------------
                ; TEMP: Message for debugging
                call            Clear_Display
                Display         Stop_Reservoirs
                call            DelayMessage
bcf LATC, 3
bcf LATC, 0
;bsf LATC, 2; move motor direction upwards
;               call DelayFlipper;
;               call DelayFlipper
;bcf LATC, 2; stop it
                ;-----------------------------
                ; TEMP: Message for debugging
                call            Clear_Display
                Display         Close_Last
                call            DelayMessage
call Stepper_Motor_Once ; moves it to close box
                ;-----------------------------
                ; TEMP: Message for debugging
                call            Clear_Display
                Display         Drop_Last
                call            DelayMessage
call Stepper_Motor_Once ; moves it to shut it
call Stepper_Motor_Once ; move it to drop it
```

```
call Stepper_Motor_Once ; move it to drop it
call Stepper_Motor_Once ; move it to drop it
call Stepper_Motor_Once ; move it to drop it

;-----------------------------------------------------------------
; Completion Message with MENU
;-----------------------------------------------------------------
Completion:
; TODO : Stop timer
        call        Clear_Display
        Display     Completion_Msg1
        call        Switch_Lines
        Display     Completion_Msg2
        call        Scroll_Menu
        swapf       PORTB,W             ;Read keypad  from portB <7:4> into W<3:0>
        andlw       0x0F

LASTMENU:
        btfss       PORTB,3                     ;Wait until keypad is pressed
        bra             $-1
        btfsc       PORTB,3                     ;Wait until keypad is released
        bra             $-1
; MENU:
; D: End Operation
; A: Operation Time
; C: Dowel Count
; B: Pattern Info
        ;go to correct menu option
        sublw       0x0F        ;check if D is pressed
        bz              End_Operation
        sublw       0x0C        ;check if A is pressed
        bz              Op_Time
        sublw       0x08        ;check if C is pressed
        bz              Dowel_Count
        sublw       0x04        ;check if B is pressed
        bz              Pattern_Info
        bra             Completion      ;returns to completion menu if choice is not valid


;D
End_Operation:
        goto        Standby
;A
Op_Time:
        call        Clear_Display
        Display     OPTIMEFINAL ; NOT DONE YET
        call        Switch_Lines
        Display     Key_Continue
```

```
                btfss           PORTB,3                         ;Wait until keypad is pressed
                bra                     $-1
                bra                     LASTMENU ; NEED CHANGE TO BRA COMPLETION
;-----------------
;B
Pattern_Info:
                call            Clear_Display
                Display         Prev_Patterns ; NOT DONE YET!!!!!
                call            Switch_Lines
                ;read the pattern choices from EEPROM
                call            Read_EEPROM ; will read into W
                movwf           num_patterns ; will know number of patterns
                subwf           EEADR ;
                ; Have not implemented Pattern Info
                movlw           0x00
Disp_Pattern:
                call            Read_EEPROM ; read first pattern
                addlw           0x30 ; W = 00110000, A PATTERN TO DISPLAY ON LCD
                movwf           PORTC  ; TO TEST TO  DISPLAY ON LCD, NEED TO CHANGE
                call            WR_DATA
                incf            EEADR
                dcfsnz          num_patterns ; decrement and check if 0 , if it is, next line is not skipped
                bra                     End_Disp_Pattern ; skip as long still got number of patterns to
display
                movlw           ","
                call            WR_DATA ; TO TEST DISPLAY ON LCD, NEED TO CHANGE
                bra                     Disp_Pattern

End_Disp_Pattern:
                btfss           PORTB,3                         ;Wait until keypad is pressed ; NOTE: IT
WAITS TILL KEYPAD IS PRESSED.
                bra                     $-1
                bra                     LASTMENU
;-----------------
;C
;TODO Dowel Count
Dowel_Count:
                ; NOT DONE YET!!!!!
                ;read from the weight sensors the # of remaining dowels
                call            Clear_Display
                Display         Light_Count
                call            Switch_Lines
                Display         Dark_Count
                btfss           PORTB,3                 ;Wait until keypad is pressed
                bra                     $-1
                btfsc           PORTB,3                 ;Wait until keypad is released
                bra                     $-1
                bra                     LASTMENU
```

```
;-----------------------------------------------------------------
; Encoders
;-----------------------------------------------------------------
; This subroutine encodes which pattern was given, it branches to proper pattern when given.
; To use it, pattern with incremented number 01 => 1 not 2 has to be used.
Pattern_Encoder: ; PATTERN NEEDS TO HOLD PATTERN NUMBER, EXAMPLE, PATTERN 1 IS 000001 NOT
000000
                dcfsnz  pattern   ; decrement pattern and store result in W, skip if result is not 0
                bra             Pattern_1
                dcfsnz  pattern
                bra             Pattern_2
                dcfsnz  pattern
                bra             Pattern_3
                dcfsnz  pattern
                bra             Pattern_4
                dcfsnz  pattern
                bra             Pattern_5

; These subroutines gets branched into by Pattern Encoder, when branched, the working register stores
the proper pattern
; 0 => white dowels
; 1 => black dowels
Pattern_6:
;               movlw  b'010101' ; => dowels will come out as black, white, black, white, black, white.
                movlw  b'000000'
                bra             Exit_Encoder
Pattern_1:
                movlw  b'000000'
                bra             Exit_Encoder
Pattern_2:
;               movlw  b'111111'
                movlw  b'000000'
                bra             Exit_Encoder
Pattern_3:
;               movlw  b'000111' ; => dowels come out from solenoid from right => black black, black,
white, white, white -> on box will be white white white-> black black, black.
                movlw  b'000000'
                bra             Exit_Encoder
Pattern_4:
                movlw  b'000000'
;               movlw  b'001100'
                bra             Exit_Encoder
Pattern_5:
                movlw  b'000000'
;               movlw  b'110011'

; now, the pattern holds the actual pattern of the dowels that needs to be kept.
```

```
Exit_Encoder:
                movwf  pattern
                return
;-----------------------------------------------------------------
; Accessing EEPROM
;-----------------------------------------------------------------
Write_EEPROM:
                ;writes EEDATA to current address in EEPROM
                bcf             EECON1,EEPGD ;point to DATA memory
                bcf             EECON1,CFGS          ;access EEPROM
                bsf             EECON1,WREN          ;enable writes
                movlw           0x55                 ;writing sequence
                movwf           EECON2
                movlw           0xAA
                movwf           EECON2
                bsf             EECON1,WR            ;set WR bit to begin write
                btfsc           EECON1,WR            ;wait for write to finish
                bra             $-1
                bcf             EECON1,WREN          ;disables writes on write complete set
                return

; Reads into W
Read_EEPROM:
                ;reads from currect address in EEPROM to working register
                bcf             EECON1,EEPGD ; clear EEPGD to go to EEPROM address, set to
go to normal program memory. in this case, go to eeprom address
                bcf             EECON1,CFGS ; CFGS: set => configuration , clear => memory
data
                bsf             EECON1,RD    ; initialize EEPROM read
                btfsc           EECON1,RD            ;wait for read to finish, if bit RD of EECON1 is 0,
skip next instruction
                bra             $-1
                movf            EEDATA,W ; move data read to W
                return

;-----------------------------------------------------------------
; LCD control
;-----------------------------------------------------------------

; This function switches LCD to the next line
Switch_Lines:
                movlw  B'11000000'
                call   WR_INS
                return

; This function clears the Display
Clear_Display:
                movlw  B'00000001'
```

```
                call    WR_INS
                return

Scroll_Menu:
                movlw           b'00011000'             ;Move to the left
                call            WR_INS
                call            Delay
                btfss           PORTB,1     ;Wait until data is available from the keypad
                bra                     Scroll_Menu
                btfsc           PORTB,1
                bra                     $-1
                return
;-----------------------------------------------------------------
; Stepper Motor Controls
;-----------------------------------------------------------------

; Model #1200 Pololu Stepper Motor: 1.8deg/step=> 200 steps per revolution => 200/6 => 33  or 34
steps. or 32 to simplify code.
                        ; For counter clockwise: Blue -> Green -> Red -> Black
                        ; Yellow and White connects to VSS

; Model #57BYGH420 Wantai Stepper Motor: 1.8deg/step => 200 steps per revolution => 200/6 => 33 or
34 steps or 32 to simplify code.

; Blue -> Green-> Red -> Black -> Clockwise
; Black -> Red -> Green -> Blue -> Counter clockwise

Stepper_Motor_4 ; Counter-clockwise
                bsf     LATA, 1
                call DelayStepperMotor ; Need delay to move motor
                bcf     LATA, 1
                bsf     LATA, 2
                call DelayStepperMotor
                bcf     LATA, 2
                bsf     LATA, 3
                call DelayStepperMotor
                bcf     LATA, 3
                bsf     LATA, 4
                call DelayStepperMotor
                bcf     LATA, 4
                return

Stepper_Motor_2 ; Counter-clockwise
                bsf     LATA, 1
                call DelayStepperMotor ; Need delay to move motor
                bcf     LATA, 1
                bsf     LATA, 2
                call DelayStepperMotor
```

```
                bcf     LATA, 2
                return

Stepper_Motor_4_Clockwise
                bsf     LATA, 4
                call DelayStepperMotor ; Need delay to move motor
                bcf     LATA, 4
                bsf     LATA, 3
                call DelayStepperMotor
                bcf     LATA, 3
                bsf     LATA, 2
                call DelayStepperMotor
                bcf     LATA, 2
                bsf     LATA, 1
                call DelayStepperMotor
                bcf     LATA, 1
                return

Stepper_Motor_20:
        call Stepper_Motor_4
        call Stepper_Motor_4
        call Stepper_Motor_4
        call Stepper_Motor_4
        call Stepper_Motor_4
        return

Stepper_Motor_26:
        call Stepper_Motor_4
        call Stepper_Motor_4
        call Stepper_Motor_4
        call Stepper_Motor_4
        call Stepper_Motor_4
        call Stepper_Motor_4
        call Stepper_Motor_2
        return

Stepper_Motor_28:
        call Stepper_Motor_4
        call Stepper_Motor_4
        call Stepper_Motor_4
        call Stepper_Motor_4
        call Stepper_Motor_4
        call Stepper_Motor_4
        call Stepper_Motor_4
        return

; should be 33.. but need 40 since first few stop sit.
```

```
Stepper_Motor_40
        call Stepper_Motor_20
        call Stepper_Motor_20
        return

Stepper_Motor_200
        call Stepper_Motor_40
        call Stepper_Motor_40
        call Stepper_Motor_40
        call Stepper_Motor_40
        call Stepper_Motor_40
        return

Stepper_Motor_OnceHalf
        call Stepper_Motor_26
        return


; This subroutine moves the stepper motor for 60degrees (one actual complete movement)
Stepper_Motor_Once
        call            Clear_Display
        Display         Stepper_Motor_Debug3
        call Stepper_Motor_40
                                                                        ;call
        Clear_Display
                                                                        ;Display
        Stepper_Motor_Debug4
                                                                        ;call Stepper_Motor_200
        return

;-----------------------------------------------------------------
; Divide Function (for # of dowels)
;-----------------------------------------------------------------
div_10:
                ;divides a number by 10
                ;input: number to be divided in working register
                ;output: answer in working register
                ;will need to modify division factor based on weight sensor properties
                movwf  div_tmp          ;store number in temp register
                movlw  D'10'            ;number to divide by
                clrf   div_ans          ;reset div_ans
div_loop
                cpfsgt div_tmp
                return
                subwf  div_tmp
                incf   div_ans
                bra            div_loop
```

```
;-----------------------------------------------------------------
; Menu_Delay (Exit if keypad is pressed)
;-----------------------------------------------------------------

; Keypad Delay to wait for input
Delay
        local     Delay_Loop
    movlw 0x88 ; 10001000, 136
    movwf COUNTH
    movlw 0xBD ; 10111101, 189
    movwf COUNTM
    movlw 0x04 ; 00000100 ; 4
    movwf COUNTL

Delay_Loop  ; loops till time out or if data is available
          btfsc    PORTB,1                    ;Check if data is available from the keypad
                        return
    decfsz        COUNTH, f
    bra           Delay_Loop
    decfsz        COUNTM, f
    bra           Delay_Loop
    decfsz        COUNTL, f
    bra           Delay_Loop
    nop
    nop
                        return

;---------------------------------
;DELAY 1 Second with 20MHz clock
; Actual delay = 1 seconds = 5000000 cycles
; Error = 0 %

Delay1s
                        ;4999993 cycles
        movlw  0x2C
        movwf  delay1s_1
        movlw  0xE7
        movwf  delay1s_2
        movlw  0x0B
        movwf  delay1s_3
Delay1s_help
        decfsz  delay1s_1, f
        goto    $+2
        decfsz  delay1s_2, f
        goto    $+2
        decfsz  delay1s_3, f
        goto    Delay1s_help
                        ;3 cycles
```

```
        nop
        nop
                        ;4 cycles (including call)
        return

Delay1sori
                        ;4999993 cycles
        movlw  0x2C
        movwf  delay1s_1
        movlw  0xE7
        movwf  delay1s_2
        movlw  0x0B
        movwf  delay1s_3
Delay1sori_help
        decfsz  delay1s_1, f
        goto    $+2
        decfsz  delay1s_2, f
        goto    $+2
        decfsz  delay1s_3, f
        goto    Delay1s_help
                        ;3 cycles
        goto    $+1
        nop
                        ;4 cycles (including call)
        return

Delay5s
        call Delay1s
        call Delay1s
        call Delay1s
        call Delay1s
        call Delay1s
        return

Delay25s
        call Delay5s
        call Delay5s
        call Delay5s
        call Delay5s
        call Delay5s
        return

Delay1000s
        call Delay25s
        call Delay25s
        call Delay25s
        call Delay25s
        call Delay25s
```

```
        call Delay25s
        call Delay25s
        call Delay25s
        call Delay25s
        call Delay25s
        call Delay25s
        call Delay25s
        call Delay25s
        call Delay25s
        call Delay25s
        call Delay25s
        call Delay25s
        call Delay25s
        call Delay25s
        call Delay25s
        call Delay25s
        call Delay25s
        call Delay25s
        call Delay25s
        call Delay25s
        call Delay25s
        call Delay25s
        call Delay25s
        call Delay25s
        call Delay25s
        call Delay25s
        call Delay25s
        call Delay25s
        call Delay25s
        call Delay25s
        call Delay25s
        call Delay25s
        call Delay25s
        call Delay25s
        call Delay25s
        call Delay25s
        call Delay25s
        return

Delay10000s
        call Delay1000s
        call Delay1000s
        call Delay1000s
        call Delay1000s
        call Delay1000s
        call Delay1000s
        call Delay1000s
        call Delay1000s
        call Delay1000s
        call Delay1000s
```

```
        return


Delay50000s ;
call Delay10000s
call Delay10000s
call Delay10000s
call Delay10000s
call Delay10000s
return

Delay100ks ;
        call Delay10000s;
        call Delay10000s;
        call Delay10000s;
        call Delay10000s;
        call Delay10000s;
        call Delay10000s;
        call Delay10000s;
        call Delay10000s;
        call Delay10000s;
        call Delay10000s;
        return

Delay1000ks
        call Delay100ks
        call Delay100ks
        call Delay100ks
        call Delay100ks
        call Delay100ks
        call Delay100ks
        call Delay100ks
        call Delay100ks
        call Delay100ks
        call Delay100ks
        return

Delay500ks
        call Delay100ks
        call Delay100ks
        call Delay100ks
        call Delay100ks
        call Delay100ks
        return

; Actual Delays

DelaySolenoid ; Delay for solenoids  Backup: Just 1 Delay10000
```

```
        call Delay10000s
        call Delay10000s
        return

DelayStepperMotorNew; Delay for Pololu Stepper motor
        call Delay1000s
        call Delay1000s
        return

DelayStepperMotor ; Delay for Hurst Stepper Motor (Needs to be longer)
        call Delay1000s
        call Delay1000s
        call Delay1000s
        return

 ; Delay for Flipper Motor

        DelayFlipper ; Delay for Flipper Motor
        call Delay100ks
        return

        call Delay50000s
        return

DelayMessage ; Delay for any short messages, especially during debugging to know what's going on
        call Delay10000s
        call Delay10000s
        return

DelayReservoirs
        call Delay1000ks
        call Delay500ks
        return

;-----------------------------------------------------------------
; LCD-related subroutines
;-----------------------------------------------------------------
InitLCD
        bcf STATUS,0
        bsf E     ;E default high

        ;Wait for LCD POR to finish (~15ms)
        call lcdLongDelay
        call lcdLongDelay
        call lcdLongDelay

        ;Ensure 8-bit mode first (no way to immediately guarantee 4-bit mode)
        ; -> Send b'0011' 3 times
```

```
        movlw  b'00110011'
        call   WR_INS
        movlw  b'00110010'
        call   WR_INS

        ; 4 bits, 2 lines, 5x7 dots
        movlw  b'00101000'
        call   WR_INS

        ; display on/off
        movlw  b'00001100'
        call   WR_INS

        ; Entry mode
        movlw  b'00000110'
        call   WR_INS

        ; Clear ram
        movlw  b'00000001'
               call   WR_INS
        return

  ;ClrLCD: Clear the LCD display
ClrLCD
        movlw  B'00000001'
        call   WR_INS
  return

;-----------------------------------------------------------------
  ; Write command to LCD - Input : W , output : -
;-----------------------------------------------------------------
; Write LCD specific instructions to LCD
WR_INS
        bcf            RS                          ;clear RS
        movwf  com                          ;W --> com
        andlw  0xF0                   ;mask 4 bits MSB w = X0
        movwf  PORTD                  ;Send 4 bits MSB
        bsf            E                           ;
        call   lcdLongDelay   ;__  __
        bcf            E                           ;  |__|
        swapf  com,w
        andlw  0xF0                   ;1111 0010
        movwf  PORTD                  ;send 4 bits LSB
        bsf            E                           ;
        call   lcdLongDelay   ;__  __
        bcf            E                           ;  |__|
        call   lcdLongDelay
        return
```

```
;-----------------------------------------------------------------
   ; Write data to LCD - Input : W , output : -
;-----------------------------------------------------------------
; Write words that needs to be output to LCD
WR_DATA
          bsf          RS
          movwf  dat
          movf   dat,w
          andlw  0xF0
          addlw  4
          movwf  PORTD
          bsf          E                          ;
          call   lcdLongDelay   ;__   __
          bcf          E                          ;  |__|
          swapf  dat,w
          andlw  0xF0
          addlw  4
          movwf  PORTD
          bsf          E                          ;
          call   lcdLongDelay   ;__   __
          bcf          E                          ;  |__|
          return

lcdLongDelay
   movlw d'20'
   movwf lcd_d2
LLD_LOOP
   LCD_DELAY
   decfsz lcd_d2,f
   goto LLD_LOOP
   return
;-----------------------------------------------------------------
; Interrupt Handling
;-----------------------------------------------------------------

; Interrupts
; Interrupt Flag bit
; Interrupt Enable bit
; Global Interrupt (disable/enable)
; reset vector is 0, when reset pic, it goes to 0.

; high priority can interrupt low priority interrupt but not vice versa.

 HighPriorityInterruptHandler:
          ; need declare temporary variables
MOVWF W_TEMP ; W_TEMP is in virtual bank
MOVFF STATUS, STATUS_TEMP ; STATUS_TEMP located anywhere
```

```
MOVFF BSR, BSR_TEMP ; BSR_TMEP located anywhere
; USER ISR CODE
; Check which flag bit got set
; Increase the count for number of dowels
; DEBUG: Display haha for 2 seconds with delay
; clear flag bit
MOVFF BSR_TEMP, BSR ; Restore BSR
MOVF W_TEMP, W ; Restore WREG
MOVFF STATUS_TEMP, STATUS ; Restore STATUS
        ; save w register
        ; save status register
        ; save bsr register?? pg 105
        ; identify which flag generated the interrupt..
        ; restore w register
        ; restore status register
        retfie ; return interrupt


I2Cstart
        banksel SSPCON2
        bsf SSPCON2, SEN   ; start it
        banksel PIR1
Swait ; start wait
        btfss PIR1, SSPIF  ; wait for it to set == 1
        goto Swait
        bcf PIR1, SSPIF  ; clear it
        return


; sending by putting code/address/data to SSPBUF register
; Note, address must be in w before calling
i2cSend
        banksel SSPBUF
        movwf SSPBUF
        banksel PIR1
cwait ; clear wait
        btfss PIR1, SSPIF
        goto cwait
        bcf PIR1, SSPIF
        return


i2cStop
        banksel SSPCON2
        bsf SSPCON2, PEN
        banksel PIR1
Pwait
        btfss PIR1, SSPIF
```

```
        goto Pwait
        bcf PIR1, SSPIF
        return



;-----------------------------------------------------------------
; End
;-----------------------------------------------------------------
; For Debugging
InfiniteLoop:
        goto InfiniteLoop ;

; it never reaches end, it always goes to standby, though END signifies to MPLAB that this is the end of
the code
        END



; I2C write code
;I2Cwrite.asm
;
;i2C Master Mode Program
;for use in 24LC16B Serial EEPROM access by 16F877
;in I2C Master Mode Operation of SSP Module of 16F877 (with Fosc = 20 MHz ) ;
;1-byte data writing to 24LC16B
;
;
  list     p=16f877
INTCON EQU 0x0B STATUS EQU 0x03 ZERO EQU 0x00 PIR2 EQU 0x0D PIR1 EQU 0x0C SSPIF EQU 0x03
PIE1 EQU 0x8C
PIE2 EQU 0x8D
;for STATUS
;I2C Modules
;SSP Interrupt Flag (must be cleared for next I2C)
SSPCON
SSPEN
SSPCON2
PEN
SEN
SSPSTAT
SMP
SSPADD
baud100
baud400
TRISC
SSPBUF
;
```

```
;
org
goto START org 0x05
movlw 0x18 banksel TRISC movwf TRISC
;MSSP Module Setup movlw baud100
;0001 1000
  ;RC4 (SDA) and RC3(SCL) as inputs
  ;100KHz speed
  ;write baud rate
;1000 0000
;
banksel SSPADD movwf SSPADD
movlw 0x80 banksel SSPSTAT movwf SSPSTAT
EQU 0x14 EQU 0x05 EQU 0x91 EQU 0x02 EQU 0x00 EQU 0x94 EQU 0x07 EQU 0x93 EQU 0x31 EQU 0x0B
EQU 0x87 EQU 0x13
  ;SSP Enable bit
;SMP=1 for 100KHz, SMP=0 for 400KHz (Choose 100KHZ)
;100KHZ standard speed
;400KHz fast speed  ($0B)
;line 1
0x0000
START
;i2c operation INITIALIZATION
;PORTC setup  - SDA and SCL both as inputs
          ;100KHZ (no slew rate control)
;selection with I2C mode
;
movlw 0x28 ;0010 1000 (SSPEN=1, SSPM3:0= 1000 ) master mode banksel SSPCON
movwf SSPCON
;========================================================================== ;WRITING
for a byte data
;Sequence
;1. Start event <S>
;2. Send Control Byte for EPEROM with Write Op <C>
; CONTROL BYTE STRUCTURE OF 24LC16B
; 1010A2A1A0R/W
; The first 4-bit code is establisihed for serial EEPROM by the I2C Bus Specification
; Next 3 bits are for Block Select (26LC16B has 8 blocks, with each block having 256 Bytes)
;    R/W = 1 for reading
;    R/W = 0 for writing
;3. Wait for ACK from EEPROM (Use SSPIF of PIR1)<K> ;4. Send the address in a block of EEPROM<A>
;5. Wait for ACK from EEPROM<K>
;6 Send a byte of data<D>
;7. Wait for ACK from EEPROM <K>
;8. STop EVENT<P>
```

```
;9. Give 24LC16 a few ms to write the
data ;================================================================ ; SEQUENCE IN
WRITING
; PIC (master Side)>S>> >C>> >A>> >D>> >P>>
; 24LC16 (slave side) <<K< <<K<
<<K< ;================================================================ ;
;Flag Clear
banksel PIR1
bcf PIR1, SSPIF ;clear the SSP flag
;>S>> START
call i2cStart
;>C>> CONTROL movlw 0xA0
call i2cSend ;block code write to 24LC16 ;>A>> ADDRESS
movlw 0x00 ;address info
call i2cSend ;>D>> DATA
movlw 'm' ;1 byte data
call i2cSend ;>P>> STOP
call i2cStop
call delay10ms ;Give 24LC16B time to write the data
;your subroutines here
;your subroutines here
    END
```

15.2 Debug Program Code

```
;-----------------------------------------------------------------
; Practice 18: DEBUGGING on PIC18F4620 TWO
            ; Keys work when you press
; Keypad:
;(UPDATED)
; 1: Black up
; 2. Black down
; 3. WHITE up
; 4. white down
; 5. 32 steps
; 6. 200 steps
; A. press once to on motor, press again to let go.
; B. Flipper

; Pin Outs
; A7-A6 -> Oscillator
; C7-C5, A5 -> Solenoid
; A4-A1 -> Stepper
; B7-B4-> Keypad, B3 -> Keypad enable
; B2, B1 -> Microswitch Interrupt
; C4-C3 -> RTC
; C2-C1 -> Bidirectional motor, flipper
; A0, C0 -> both motors, reservoirs
; D7-D4 -> LCD, D3, D2 -> E, RS
```

```
; D1, D0 -> Bidirectional motor, Closing wheel
; E0 -> Microswtich close box


; Input/Output , TRIS
; 76543210
; A -> 0000000
; B -> 1111111x
; C -> 000IC000
; D -> 00000000
; E -> xx0

; Written By : Soon Chee Loong
; Accomplish: ??
;
;
;-----------------------------------------------------------------
; Need to Work On:
; 10. Flipper Motor (work out delay timing)
; 1. Timer, Real Time, use rtc clock, basically get current time, and get current time after operation and
deduct to find actual time and display number on LCD.
; 2. Number of dowels
; 3. Dowels pattern to display
; 9. Microswitch Interrupt Service Routine at Port B7-B4, Change Keypad to Pins E..., it gets activated
when pin b changes state
        ; B0, B1 B2-> Microswitch input with interrupts
; 7. Counting number of dowels using interrupts.
; 12. Change code to suit new stepper motor and box arrangments
                ; INITIAL : 1. box (won't drop cause lid opens), 2 box, 3 empty, 4 box (dowels drop), 5
wire close, 6 shut, 1. drop

;               i)  Dowel Dropping
;               ii) Move twice -> 1st box: shuts, 2nd box: dowel drop
;               ii) move once -> 3rd box: (don't account for 3rd box)
;               iii)
;               iv)
;               v)
;               vi)
;-----------
; DONE
; 4. Changing Ports to actual ports
        ; C2, C1 => Bidirectional motor  DONE     (BROWN)
        ; D7-D4 => LCD, D3,D2 => E, RS   DONE     (ORANGE)
        ; B7-B4 => Keypad              DONE     (GREEN)
        ; B3 => Keypad Enable Bit       DONE         (GREEN)
        ; C7-A5 => Solenoids           DONE          (RED)
                ; C7 =
                ; C6 =
```

```
                ; C5 =
                ; C4 =
        ; A0, C0 => both motors          DONE            (BLUE)
        ; A4-A1 => Stepper Motor         DONE            (WHITE)
; 5. Including Stepper Motor
; 6. Changing Code Flow to actual Flow
; 8. Move Solenoids, First check that 2 motors start spinning
; 11; BUG: Never goes to Ejector cause something wrong with eeprom or something. it always has
BWBWBW regardless of input
                ; Did not save w to pattern before pattern encoding
                ; Did not decrement number of patterns.

        list p=18f4620                  ; list directive to define processor
        #include <p18f4620.inc>         ; processor specific variable definitions
;-----------------------------------------------------------------
;Configuration Bits
;-----------------------------------------------------------------
                CONFIG OSC=HS, FCMEN=OFF, IESO=OFF
                CONFIG PWRT = OFF, BOREN = SBORDIS, BORV = 3
                CONFIG WDT = OFF, WDTPS = 32768 ;
                CONFIG MCLRE = ON, LPT1OSC = OFF, PBADEN = OFF, CCP2MX = PORTC
                CONFIG STVREN = ON, LVP = OFF, XINST = OFF
                CONFIG DEBUG = OFF
                CONFIG CP0 = OFF, CP1 = OFF, CP2 = OFF, CP3 = OFF
                CONFIG CPB = OFF, CPD = OFF
                CONFIG WRT0 = OFF, WRT1 = OFF, WRT2 = OFF, WRT3 = OFF
                CONFIG WRTB = OFF, WRTC = OFF, WRTD = OFF
                CONFIG EBTR0 = OFF, EBTR1 = OFF, EBTR2 = OFF, EBTR3 = OFF
                CONFIG EBTRB = OFF
;-----------------------------------------------------------------
;Declare unbanked variables (at 0x70 and on)
        cblock  0x70
                COUNTH                  ;used in delays
                COUNTM                  ;used in delays
                COUNTL                  ;used in delays
                Table_Counter
                lcd_tmp
                lcd_d1
                lcd_d2
                com
                dat
                num_patterns
                pattern
                num_dowels
                div_tmp                 ;used in dividing
                div_ans         ;answer of the divide function
                num_white_dowels ; Keeps track of number of white dowels in reservoir
                num_black_dowels ; Keeps track of number of black dowels in reservoir
```

```
                delay1s_1
                delay1s_2
                delay1s_3
                tempwsaveregister; DEBUG: save w for debugging
                ; Interrupt variables
                W_TEMP
                STATUS_TEMP
                BSR_TEMP
                debugpattern
        endc

;-----------------------------------------------------------------
;Declare constants for pin assignments (LCD on PORTD)
                #define RS      PORTD,2
                #define E       PORTD,3

      ORG     0x0000    ;RESET vector must always be at 0x00, when pic restarts, it gets here.

                 goto     init      ;Just jump to the main code section.

                 org        0x08 ; high priority interrupt handler
                 goto HighPriorityInterruptHandler

                        ;                   org 0x18  ; will only be executed if NOT in compatibility mode
                        ;                   goto LowPriorityInterruptHandler
;-----------------------------------------------------------------
; Delay: ~160us macro
;-----------------------------------------------------------------

; This macro delays the LCD by 255 instructions on 20 MHZ clock.

LCD_DELAY macro ; copy this whole macro till endm by just writing LCD_DELAY at bottom,
                                ; macro means inline code, it will just copy paste into whatever section.
        movlw   0xFF    ; 11111111
        movwf   lcd_d1  ; lcd_d1 has the value
        decfsz  lcd_d1,f ; decrement lcd_d1 by 1, skip next line if 0.
        goto    $-2
        endm

; To display strings in PIC18F4620
;-----------------------------------------------------------------
; Display macro
;-----------------------------------------------------------------
Display macro   Message  ; call by typing Display "Command Line Argument", see example below, it uses
look up tables
                ; Declare local subfunctions
                local     loop_    ; local labels are part of the macro, cause word local, it is inline, so can't
be non-local,
```

```
                                        ; if it is non-local, the same loop_ will get copied many times
resulting in
                                        ; runtime error.
                                                ; when have label/subfunction in macro, need local.
                local     end_
                movlw  LOW(Message) ; Message is command line argument,
                movwf  TBLPTRL      ; moving value of low to a special register called TBLPTRL, Table
Pointer Low
                movlw  HIGH(Message)
                movwf  TBLPTRH                  ; Table Pointer High
                movlw  UPPER(Message)
                movwf  TBLPTRU ; Table Pointer Upper
loop_
                tblrd     *+   ; read into TABLAT and increment, command to look at address, put into SPR
TABLAT, increment and read it.
                movf    TABLAT, W ; get data into working register
                xorlw   B'00000000' ;check WORK reg to see if 0 is returned, 0 => end of string, xor : 00
&& 11 => 0, 10 && 01 => 1; only returns 0 if all 0.
                btfsc   STATUS,Z ; ; check last instruction (xor) to see if 0 was return, if it is 0, execute
next line, if not, skip.
                goto    end_
                call    WR_DATA ; write data into LCD
                goto    loop_
end_
                endm

;-----------------------------------------------------------------
; Initialize PIC
;-----------------------------------------------------------------
init

        movlw b'10000000'
        movwf INTCON ; enable unmasked interrupt ;
        movlw b'11110000' ;;
        movwf INTCON2 ; allow rising edge ;
        movlw b'11011000';
        movwf INTCON3 ; enable external interrupt and high priority them for int1 and int2

                        ; TODO: ENABLE GLOBAL INTERRUPT
                        ; TODO: ENABLE  "ENABLE FLAG" FOR B0 and B1, if flag bit is 1, then there is an
interrupt. I will only jump to interrupt vector if interrupt is enabled
                        ; TODO: Enable interrupt on positive edge for both interrupts.
                        ; TODO: Clear interrupt flag bits before operation begins.
                        ; INT1P -> Interupt priority,
                        ; INT1F -> Flag becomes 1 when hardware interrupt occurs
                        ; INT1D -> enables this interrupt to occur
```

```
; CHANGE THIS INTCON LINE AS YOU"RE USING INTERRUPTS!!!!!, build interrupt debouncing circuit, buy
small resistors!!!!!
                                        ;                       clrf      INTCON                    ; Disable all
interrupts!! Pg95/390 of datasheet
      bsf          STATUS,0         ; select bank 1, NOT SURE IF STILL APPLICABLE , a carry out occur if set C
on STATUS to 1.
                   ; Allow port E to be used for digital input
                    movlw 0x0F ;
                    movwf ADCON1                    ; set portA to digital
                    movlw 0x0F               ; configure comparators
                    movwf CMCON                     ; for digital input

; Set Inputs/Outputs (TRISX)
; A -> 0000000
; B -> 1111111x
; C -> 000IC000
; D -> 00000000
; E -> xx0
      clrf         TRISA    ; 00000000 -> A4-A1 => Stepper Motor
      movlw      b'11111110'      ; Set required keypad inputs
                                                ;---------------------------
                                                ;DEBUG
                                                ;                                        clrf TRISB
      movwf      TRISB ; 11111110 -> B7-B4 Keypad Inputs, B3 => Keypad Enable , B2, B1 -> microswtich
interrupts
          ; ENABLE INTERRUPTS AT B1 and B2!!!
                    clrf      TRISC      ; 00000000 -> C7-C5,A5 Solenoids, C4,C3-> RTC,  A0,C0 => Both Motor,
C2,C1 => Bidirectional motor
                    clrf      TRISD              ; 00000000 -> D7-D4 LCD Data, D3,D2 E & RS for LCD , D1, D0 ->
Bidirectional motor
                    movlw b'111'               ; Set required microswitch inputs, E0 -> Flipper microswtich
                    movwf TRISE                ; microswtich input
                   ; EEPROM
                    clrf      EEADRH                    ; point at address 00h for EEPROM (ranges from 00h to
33Fh)
                    clrf      EEADR              ; EEADRH and EEADR holds the address of EEPROM being
accessed

      bcf          STATUS,0   ; select bank 0, NOT SURE IF STILL NEEDED
; Set Initial Output Voltage
      clrf         PORTA ; Don't drive motor
      clrf         PORTB ; Don't accept any initial input from KEYPAD
      clrf         PORTC ; Don't contract any solenoids, Don't move any motors
      clrf         PORTD ; Don't write anything on LCD
                    clrf   PORTE ; Don't accept any microswitch input

                    call      InitLCD    ;Initialize the LCD, subroutine at bottom.
                    goto     Standby    ; goto Standby
```

```
;-----------------------------------------------------------------
; Look up table
;-----------------------------------------------------------------
Real_Time:
                dw              "HH:MM", 0                      ; temporary
Welcome_Msg:
                dw              "Press any key", 0
Pattern_Select1:
                dw              "Press 1-6 to",0
Pattern_Select2:
                dw              "Select a pattern", 0
Start_Operation:
                dw              "A) Start", 0
New_Pattern:
                dw              "B) Add pattern", 0
Completion_Msg1:
                dw              "Operation complete. A) Operation Time.", 0
Completion_Msg2:
                dw              "B) Pattern Info C) Dowel Count, D) Exit.", 0
Key_Continue:
                dw              "Press any key.",0
Light_Count:
                dw              "White Dowels: ",0
Dark_Count:
                dw              "Brown Dowels: ",0
Prev_Patterns:
                dw              "Prev Patterns:",0

; Start & Stop Message
Start_Reservoirs:
                dw              "Res Activated", 0
Start_Stepper_Motor:
                dw              "Step Motor Activated", 0
Start_Solenoids:
                dw              "Sol Activated", 0
Start_Flipper_Forward:
                dw              "Flip Forward Activated", 0

Start_Flipper_Backward:
                dw              "Flip Backward Activated", 0

Stop_Reservoirs:
                dw              "Res Terminated", 0
Stop_Flipper_Forward:
                dw              "Flip Forward Terminated", 0
Stop_Flipper_Backward:
                dw              "Flip Backward Terminated", 0
```

```
Close_Last:
        dw      "Close Last Box", 0

Drop_Last:
        dw      "Drop Last Box", 0

; Debug Message

Solenoid_White_Debug1:
        dw      "Solenoid W T C", 0 ; Solenoid White Top Contract
Solenoid_White_Debug2:
        dw      "Solenoid W T E", 0 ; Top Extend
Solenoid_White_Debug3:
        dw      "Solenoid W B C", 0 ; Bottom Contract
Solenoid_White_Debug4:
        dw      "Solenoid W B E", 0 ; Bottom Extend
Solenoid_Black_Debug1:
        dw      "Solenoid B T C", 0 ; Solenoid Black Top Contract
Solenoid_Black_Debug2:
        dw      "Solenoid B T E", 0
Solenoid_Black_Debug3:
        dw      "Solenoid B B C", 0
Solenoid_Black_Debug4:
        dw      "Solenoid B B E", 0

Stepper_Motor_Debug1:
        dw      "Before Stepper Motor", 0
Stepper_Motor_Debug2:
        dw      "After Stepper Motor", 0

Stepper_Motor_Debug3:
        dw      "Stepper Motor 32", 0
Stepper_Motor_Debug4:
        dw      "Stepper Motor 200", 0
Stepper_Motor_Debug11:
        dw      "Stepper Motor 1", 0
Stepper_Motor_Debug12:
        dw      "Stepper Motor 2", 0
Stepper_Motor_Debug13:
        dw      "Stepper Motor 3", 0
Stepper_Motor_Debug14:
        dw      "Stepper Motor 4", 0
Stepper_Motor_Debug15:
        dw      "Stepper Motor 5", 0
Stepper_Motor_Debug16:
        dw      "Stepper Motor 6", 0
```

```
LALA6:
        dw      "6", 0          ; temporary
LALA5:
        dw      "5", 0          ; temporary
LALA4:
        dw      "4", 0          ; temporary
LALA3:
        dw      "3", 0          ; temporary
LALA2:
        dw      "2", 0          ; temporary
LALA1:
        dw      "1", 0          ; temporary
LALAB:
        dw      "B", 0          ; temporary
LALAA:
        dw      "A", 0          ; temporary

BABA1:
        dw      "Interrupt 1 active", 0         ; temporary


BABA2:
        dw      "Interrupt 2 active", 0         ; temporary

BABA3:
        dw      "End Interrupt", 0              ; temporary

;-----------------------------------------------------------------
; Main
;-----------------------------------------------------------------

; Main occurs in Operation

;-----------------------------------------------------------------
;Standby Mode
;-----------------------------------------------------------------
Standby:
        call    Clear_Display
        Display Real_Time ; NOT DONE YET
        call    Switch_Lines
        Display Welcome_Msg
        ; Wait for Keypad to be pressed (Data Available -> B3)
                ;----------------------------
                ; DEBUG:
;               movwf   tempwsaveregister
;               movlw   B'00001000'
;               movwf   PORTB
;               movf    tempwsaveregister, W
```

```
                btfss           PORTB,3                 ;Wait until keypad button is pressed, btfss skips
next line if 1(set)
                bra                     $-1
                        ;----------------------------
                        ; DEBUG:
;                       movwf           tempwsaveregister
;                       movlw           B'00000000'
;                       movwf           PORTB
;                       movf            tempwsaveregister, W
                btfsc           PORTB,3                 ;Wait until keypad button is depressed, btfsc
skips next line if 0 (clear)
                bra                     $-1

;-----------------------------------------------------------------
; User Interface
;-----------------------------------------------------------------
                ; Clear Number Patterns to 0 patterns initially
                clrf            num_patterns ; stores number of patterns given. At least 1, max. infinity.

; This subroutine gets called in beginning for pattern 1 and might get called again later
; for pattern2. It will store both patterns in EEPROM at address 01H and 02H in the end.
; It may be repeated for a 3rd pattern too! num_patterns stores number of patterns given
Pattern_Menu:
                call            Clear_Display
                Display         Pattern_Select1
                call            Switch_Lines
                Display         Pattern_Select2
                ; Wait till the keypad is pressed before reading
                        ;----------------------------
                        ; DEBUG:
;                       movwf           tempwsaveregister
;                       movlw           B'00001000'
;                       movwf           PORTB
;                       movf            tempwsaveregister, W
                btfss           PORTB,3                 ;Wait until keypad button is pressed
                bra                     $-1
                        ;----------------------------
                        ; DEBUG:
;                       movwf           tempwsaveregister
;                       movlw           B'00000000'
;                       movwf           PORTB
;                       movf            tempwsaveregister, W
                btfsc           PORTB,3                 ;Wait until keypad button is released
                bra                     $-1

                ;make sure that the data entered is between 1 and 6 inclusive
                ; Note: The keypad is released already, but the keypad holds the last key pressed,
```

```
                                                                                                                    ; not sure
if due to keypad or MM74C922N chip.
                ; skips if B7 == 1 or if B5 and B4 are both 1 => Keypad Input given was not 1-6
                btfsc           PORTB,7
                goto            Pattern_Menu ; keep looping if B7 is not 0
                btfss           PORTB,4 ; B7 is 0, skip if B4 is 1
                goto            Store_Pattern
                btfss           PORTB,5 ; B7 is 0, skip if B5 is 1
                goto            Store_Pattern
                goto            Pattern_Menu

; Store the keypad pattern pressed onto pattern then to EEPROM
Store_Pattern:
                ;store data from keypad into memory for use during operation
                swapf           PORTB,w ; let w hold the last keypad pressed in xxxxbbbb (where bbbb is
the code for last keypad pressed)
                                ; swapf swaps B7-B4 with B3-B0 and store result in w or f if f is stated. In
this case, it stores in w.
                andlw           0x0F    ; and w with 00001111 to not let first 4 bits which does not
matter interfere, w = 0000bbbb
                movwf           pattern ; let pattern register hold the current pattern
                movlw           0x02    ;takes keypad entry and coverts it into the pattern number
                                                        ; let w = 00000010
                ; Change coded pattern for 1-3 from keypad input to their actual binary values
                cpfsgt          pattern ; compare f with W and skip if f > W , if f > W => f is more than 3
=> skip
                incf            pattern ;f < 4 since did not skip, increment f by 1 => f += 1
(00000010+00000001 = 00000011) and store result in W
                                        ; increment if input was 1-3 and not 4-6 to change the keypad
encoder binary codes
                                        ;  to actual numerical value and not keypad value
                ;write pattern to EEPROM
                incf            EEADR  ;increment data memory address by one (initially at 0x00 at
beginning of program)
                movff           pattern, EEDATA ; movff => move from file to file, in this case, move
from pattern to EEDATA
                call            Write_EEPROM ; write the first pattern at EEPROM

                ;next two lines are just to check the encoder functionality
                call            Pattern_Encoder ; when returned, 'pattern' variable holds the pattern of
the dowels based on input given
                                                                        ; 000111 => WWWBBB (W =
white, B = Black)
                ; pattern holds actual pattern to dispense dowels
;movff          pattern,PORTD ; move pattern to PORTC to output the patterns on the LEDs to see if
right
                                                        ; Debugging just to see if correct pattern was
given , have not checked!!!!!
```

```
                incf            num_patterns            ;increase the pattern count as first pattern was
given.

; Continue to get second pattern and maybe more if needed.
Pattern_Menu2
                call            Clear_Display
                Display         Start_Operation ; Press A to start
                call            Switch_Lines
                Display         New_Pattern       ; Press B to add a new pattern

                        ;----------------------------
                        ; DEBUG:
;                       movwf           tempwsaveregister
;                       movlw           B'00111000' ; A
;                       movwf           PORTB
;                       movf            tempwsaveregister, W


; New Debug Mode
                btfss           PORTB,3                 ;Wait until data is available from the keypad
                bra                     $-1

                swapf           PORTB,W                 ;Read keypad from portB <7:4> into W<3:0>
                andlw           0x0F ; and W with 00001111

                movwf           debugpattern ; debug pattern hows the pattern given.

; NOw you have to determine which key it is

                movf    debugpattern, W
                sublw   0x07
                bz              DebugKeyB
                goto AA

DebugKeyB:
                call            Clear_Display
                Display         LALAB ; NOT DONE YET
                bsf LATC, 2; move motor direction upwards
                call DelayFlipper
                bcf LATC, 2; stop it
                ;------------------------------
                ; TEMP: Message for debugging
                call            Clear_Display
                Display         Stop_Flipper_Forward
                call            DelayMessage
                ;------------------------------
                ; TEMP: Message for debugging
                call            Clear_Display
```

```
                Display         Start_Flipper_Backward
                call            DelayMessage
                bsf LATC, 1; move motor direction downwards
;               call DelayFlipper
                btfss           PORTE, 0                ;Wait until microswitch is pressed
                bra                     $-1
                bcf LATC, 1; stop it
                ;-----------------------------
                ; TEMP: Message for debugging
                call            Clear_Display
                Display         Stop_Flipper_Backward
                call            DelayMessage
                goto            Pattern_Menu2

AA:
                movf    debugpattern, W
                sublw   0x06
                bz              DebugKey6
                goto BB

DebugKey6:
                call            Clear_Display
                Display         LALA6 ; NOT DONE YET
                call            Clear_Display
                Display         Stepper_Motor_Debug4
                call Stepper_Motor_200
                goto            Pattern_Menu2

BB:
                movf    debugpattern, W
                sublw   0x05
                bz              DebugKey5
                goto     CC

DebugKey5
                call            Clear_Display
                Display         LALA5 ; NOT DONE YET

                call            Clear_Display
                Display         Stepper_Motor_Debug3
                call Stepper_Motor_32
                goto            Pattern_Menu2

CC:
                movf    debugpattern, W
                sublw   0x04
                bz              DebugKey4
                goto    DD
```

```
DebugKey4
        call        Clear_Display
        Display     LALA4 ; NOT DONE YET
        call        Clear_Display
        Display     Solenoid_White_Debug3
        bsf     LATC, 6
        call        DelaySolenoid
        call        Clear_Display
        Display     Solenoid_White_Debug4
        bcf     LATC, 6
        call        DelaySolenoid
        goto        Pattern_Menu2

DD:
        movf    debugpattern, W
        sublw   0x03
        bz          DebugKeyA
        goto EE


DebugKeyA:
        call        Clear_Display
        Display     LALAA ; NOT DONE YET
        bsf LATC, 0
        bsf LATC, 3
        btfsc       PORTB,3             ;Wait until data is not available from the keypad
        bra             $-1
        btfss       PORTB,3             ;Wait until data is available from the keypad
        bra             $-1
        bcf LATC, 0
        bcf LATC, 3
        btfsc       PORTB,3             ;Wait until data is not available from the keypad
        bra             $-1
        goto        Pattern_Menu2

EE:

        movf    debugpattern, W
        sublw   0x02
        bz          DebugKey3
        goto FF


DebugKey3:
        call        Clear_Display
        Display     LALA3 ; NOT DONE YET
        bsf         LATC, 7
```

```
        call        Clear_Display
        Display     Solenoid_White_Debug1
        call        DelaySolenoid
        call        Clear_Display
        Display     Solenoid_White_Debug2
        bcf         LATC, 7
        call        DelaySolenoid
        goto        Pattern_Menu2


FF:
        movf    debugpattern, W
        sublw   0x01
        bz          DebugKey2
        goto GG

DebugKey2:
        call        Clear_Display
        Display     LALA2
        call        Clear_Display
        Display     Solenoid_Black_Debug3
        bsf     LATC, 4
        call        DelaySolenoid
        call        Clear_Display
        Display     Solenoid_Black_Debug4
        bcf     LATC, 4
        call        DelaySolenoid
        goto        Pattern_Menu2

GG:
        movf    debugpattern, W
        sublw   0x00
        bz          DebugKey1
        goto    Pattern_Menu2

DebugKey1:
        call        Clear_Display
        Display     LALA1 ; NOT DONE YET

        bsf     LATC, 5
        call        Clear_Display
        Display     Solenoid_Black_Debug1
        call        DelaySolenoid
        call        Clear_Display
        Display     Solenoid_Black_Debug2
        bcf     LATC, 5
        call        DelaySolenoid
        goto        Pattern_Menu2
```

```
                ;if not given B input (0111), go back to pattern menu
;               sublw           0x07  ; subtract 000111 with w and place result in w, so basically result =
7 - w; w = result;
;               bz                      Pattern_Menu ; bz = branch if zero (ZERO bit is 1 => last
instruction resulted in 0), will repeat Pattern Menu
                ;if A), start operation
;               sublw           0x04 ; The math used is 7- 3-  -4 = 0. ( if A it will minus 3 ) so when you
minus 4, it will be A!
;               bnz                     Pattern_Menu2 ; loop again if button A was not pressed (means
neither A nor B was pressed)

;-----------------------------------------------------------------
; Operation
;-----------------------------------------------------------------

; Begin operation once user press A or when 2nd pattern is given.
Operation:
; TODO:START TIMER

        ; Begin spinning reservoirs AND LET IT SPIN TILL whenever

;----------------------


                ; DEBUG
                ;       call Stepper_Motor_Once_Debug

                ;------------------------------
                ; TEMP: Message for debugging
                call            Clear_Display
                Display         Start_Reservoirs
                call            DelayMessage
;Spin_Reservoirs:
                bsf LATC, 0
                bsf LATC, 3
;----------------------
; TODO: Delay while Counting Dowels using interrupts.
;
                goto InfiniteLoop; TEST: BOTH MOTORS SPIN FOREVER , it is definitely not watchdog,
must be power supply.
```

```
; Store number of patterns into EEDATA
                movff           num_patterns,EEDATA
                incf            EEADR ; change EEPROM address
                call            Write_EEPROM ; write the number of patterns on EEPROM
                movf            num_patterns,w ; w holds number of patterns
                subwf           EEADR ; ; go to address of the last given pattern.

; Dispense box into loading area

DisperserFirstBox:
                goto BoxPositioner ; dont move stepper motor for first box.

Dispenser: ; Will come here 1st time right after above code, and right after 6 dowels are loaded onto box
(Flipper)
                        ; where it moves stepper motor once for next operation
                movlw   0x00                    ; w is 00000000
                cpfsgt  num_patterns    ; compare num_patterns with W, if f>w, skip next line
                goto    Ejector         ; will only be here with num_patterns == 0

                                                        ;               call
        Clear_Display
                                                        ;               Display
        Stepper_Motor_Debug1
                call Stepper_Motor_Once ; to move next box into place, at the same time closing the
current box.
                                                        ;       call            Clear_Display
                                                        ;       Display
        Stepper_Motor_Debug2
                call Stepper_Motor_Once ; to move the 2nd box into place, need to move stepper motor
twice.
;-----------------------------------------------------------------
; Box Positioner
;-----------------------------------------------------------------
BoxPositioner:
; Read next pattern
                call    Read_EEPROM ;read what the next pattern should be into w.
                incf    EEADR           ;increment address in the EEPROM
                movwf   pattern     ; need move from w to pattern before encoding final pattern
                call    Pattern_Encoder         ;convert pattern number to actual pattern sequence
                movlw   0x06            ;set number of dowels to 6
                movwf   num_dowels ; num_dowels stores number of dowels
                decf    num_patterns; decrement number of patterns left
Check_Box:
                movlw   0x00
                cpfsgt  num_dowels ; as long num_dowels is not 0, skip Ejector and jump to move box
                goto    Flipper ; Will only go to Dispenser once all 6 dowels are completed
; Will be here if num_dowels not 0.
;-----------------------------------------------------------------
```

```
; Dowel Sorter
;-----------------------------------------------------------------
Dowel_Sorter:
                ;check next dowel
                btfsc   pattern,0 ; will skip next line if the bit 0th bit of pattern is 0 => white
                bra             Dark_Dowel
; Move solenoids for White Dowels
Light_Dowel:
                bsf             LATC, 7
                call            Clear_Display
                Display         Solenoid_White_Debug1
                call            DelaySolenoid
                call            Clear_Display
                Display         Solenoid_White_Debug2
                bcf             LATC, 7
                call            DelaySolenoid
                call            Clear_Display
                Display         Solenoid_White_Debug3
                bsf     LATC, 6
                call            DelaySolenoid
                call            Clear_Display
                Display         Solenoid_White_Debug4
                bcf         LATC, 6
                call            DelaySolenoid
;                                                                       goto Light_Dowel ; TEST:
Test that Solenoids are opening and closing within given time frame

;ADDON: CHECK IF DOWEL IS IN BOX, REPEAT IF NOT     ;btfss PORTE,0              ;check if dowel is
in the box

        ;bra            Light_Dowel     ;repeat rod motion if dowel not in box
                decf    num_dowels      ;decrease the dowel count
                rrncf   pattern         ;shift the pattern over so the next dowel is in bit 0
                goto    Check_Box
; Move Soleniods for Dark Dowels
Dark_Dowel:
                bsf     LATC, 5
                call            Clear_Display
                Display         Solenoid_Black_Debug1
                call            DelaySolenoid
                call            Clear_Display
                Display         Solenoid_Black_Debug2
                bcf     LATC, 5
                call            DelaySolenoid
                call            Clear_Display
                Display         Solenoid_Black_Debug3
                bsf     LATC, 4
                call            DelaySolenoid
```

```
                call            Clear_Display
                Display         Solenoid_Black_Debug4
                bcf     LATC, 4
                call            DelaySolenoid
;                                                                                       goto Dark_Dowel ; ;
TEST: Test that Solenoids are opening and closing within given time frame , need change to dark

;ADDON: CHECK IF DOWEL IS IN BOX, REPEAT IF NOT      ;btfss PORTE,0                  ;check if dowel is
in the box

        ;bra            Light_Dowel     ;repeat rod motion if dowel not in box
                decf    num_dowels      ;decrease the dowel count
                rrncf   pattern, 1              ;shift the pattern over so the next dowel is in bit 0 and
place result back into pattern
                goto    Check_Box

;-----------------------------------------------------------------
; Flipper
;-----------------------------------------------------------------
                ;-----------------------------
                ; TEMP: Message for debugging
                call            Clear_Display
                Display         Start_Flipper_Forward
                call            DelayMessage
Flipper:
        bsf LATC, 2; move motor direction upwards
        call DelayFlipper
        bcf LATC, 2; stop it
                ;-----------------------------
                ; TEMP: Message for debugging
                call            Clear_Display
                Display         Stop_Flipper_Forward
                call            DelayMessage
                ;-----------------------------
                ; TEMP: Message for debugging
                call            Clear_Display
                Display         Start_Flipper_Backward
                call            DelayMessage
        bsf LATC, 1; move motor direction downwards
        call DelayFlipper
        bcf LATC, 1; stop it
                ;-----------------------------
                ; TEMP: Message for debugging
                call            Clear_Display
                Display         Stop_Flipper_Backward
                call            DelayMessage
        goto Dispenser
```

```
;-----------------------------------------------------------------
; Box Ejector
;-----------------------------------------------------------------
; Will only come here once no more boxes needed to be loaded
; Currently, there is one box still at the dowel dispenser location. have to move it to drop it out.
Ejector:
; Stop Reservoir
                ;-----------------------------
                ; TEMP: Message for debugging
                call            Clear_Display
                Display         Stop_Reservoirs
                call            DelayMessage
bcf LATC, 3
bcf LATC, 0

                ;-----------------------------
                ; TEMP: Message for debugging
                call            Clear_Display
                Display         Close_Last
                call            DelayMessage
call Stepper_Motor_Once ; moves it to close box
                ;-----------------------------
                ; TEMP: Message for debugging
                call            Clear_Display
                Display         Drop_Last
                call            DelayMessage
call Stepper_Motor_Once ; moves it to shut it
call Stepper_Motor_Once ; move it to drop it

;-----------------------------------------------------------------
; Completion Message with MENU
;-----------------------------------------------------------------
Completion:
; TODO : Stop timer
                call            Clear_Display
                Display         Completion_Msg1
                call            Switch_Lines
                Display         Completion_Msg2
                call            Scroll_Menu
                swapf           PORTB,W                 ;Read keypad  from portB <7:4> into W<3:0>
                andlw           0x0F

; MENU:
; D: End Operation
; A: Operation Time
; C: Dowel Count
; B: Pattern Info
                ;go to correct menu option
```

```
                sublw           0x0F            ;check if D is pressed
                bz                      End_Operation
                sublw           0x0C            ;check if A is pressed
                bz                      Op_Time
                sublw           0x08            ;check if C is pressed
                bz                      Dowel_Count
                sublw           0x04            ;check if B is pressed
                bz                      Pattern_Info
                bra                     Completion      ;returns to completion menu if choice is not valid

;D
End_Operation:
                goto            Standby
;A
Op_Time:
                call            Clear_Display
                Display         Real_Time ; NOT DONE YET
                call            Switch_Lines
                Display         Key_Continue
                btfss           PORTB,1                         ;Wait until keypad is pressed
                bra                     $-1
                bra                     End_Operation ; NEED CHANGE TO BRA COMPLETION
;-----------------
;B
Pattern_Info:
                call            Clear_Display
                Display         Prev_Patterns ; NOT DONE YET!!!!!
                call            Switch_Lines
                ;read the pattern choices from EEPROM
                call            Read_EEPROM ; will read into W
                movwf           num_patterns ; will know number of patterns
                subwf           EEADR ;
                ; Have not implemented Pattern Info
                movlw           0x00
Disp_Pattern:
                call            Read_EEPROM ; read first pattern
                addlw           0x30 ; W = 00110000, A PATTERN TO DISPLAY ON LCD
                movwf           PORTC  ; TO TEST TO  DISPLAY ON LCD, NEED TO CHANGE
                call            WR_DATA
                incf            EEADR
                dcfsnz          num_patterns ; decrement and check if 0 , if it is, next line is not skipped
                bra                     End_Disp_Pattern ; skip as long still got number of patterns to
display
                movlw           ","
                call            WR_DATA ; TO TEST DISPLAY ON LCD, NEED TO CHANGE
                bra                     Disp_Pattern

End_Disp_Pattern:
```

```
                btfss           PORTB,1                         ;Wait until keypad is pressed ; NOTE: IT
WAITS TILL KEYPAD IS PRESSED.
                bra                     $-1
                bra                     End_Operation
;-----------------
;C
;TODO Dowel Count
Dowel_Count:
                ; NOT DONE YET!!!!!
                ;read from the weight sensors the # of remaining dowels
                call            Clear_Display
                Display         Light_Count
                call            Switch_Lines
                Display         Dark_Count
                btfss           PORTB,1                         ;Wait until keypad is pressed
                bra                     $-1
                bra                     End_Operation

;-----------------------------------------------------------------
; Encoders
;-----------------------------------------------------------------
; This subroutine encodes which pattern was given, it branches to proper pattern when given.
; To use it, pattern with incremented number 01 => 1 not 2 has to be used.
Pattern_Encoder: ; PATTERN NEEDS TO HOLD PATTERN NUMBER, EXAMPLE, PATTERN 1 IS 000001 NOT
000000
                dcfsnz  pattern   ; decrement pattern and store result in W, skip if result is not 0
                bra             Pattern_1
                dcfsnz  pattern
                bra             Pattern_2
                dcfsnz  pattern
                bra             Pattern_3
                dcfsnz  pattern
                bra             Pattern_4
                dcfsnz  pattern
                bra             Pattern_5

; These subroutines gets branched into by Pattern Encoder, when branched, the working register stores
the proper pattern
; 0 => white dowels
; 1 => black dowels
Pattern_6:
                movlw  b'010101' ; => dowels will come out as black, white, black, white, black, white.
                bra             Exit_Encoder
Pattern_1:
                movlw  b'000000'
                bra             Exit_Encoder
Pattern_2:
                movlw  b'111111'
```

```
                bra             Exit_Encoder
Pattern_3:
                movlw  b'000111' ; => dowels come out from solenoid from right => black black, black,
white, white, white -> on box will be white white white-> black black, black.
                bra             Exit_Encoder
Pattern_4:
                movlw  b'001100'
                bra             Exit_Encoder
Pattern_5:
                movlw  b'110011'

; now, the pattern holds the actual pattern of the dowels that needs to be kept.
Exit_Encoder:
                movwf  pattern
                return
;-----------------------------------------------------------------
; Accessing EEPROM
;-----------------------------------------------------------------
Write_EEPROM:
                ;writes EEDATA to current address in EEPROM
                bcf                     EECON1,EEPGD;point to DATA memory
                bcf                     EECON1,CFGS             ;access EEPROM
                bsf                     EECON1,WREN             ;enable writes
                movlw           0x55                    ;writing sequence
                movwf           EECON2
                movlw           0xAA
                movwf           EECON2
                bsf                     EECON1,WR               ;set WR bit to begin write
                btfsc           EECON1,WR               ;wait for write to finish
                bra                     $-1
                bcf                     EECON1,WREN             ;disables writes on write complete set
                return

; Reads into W
Read_EEPROM:
                ;reads from currect address in EEPROM to working register
                bcf                     EECON1,EEPGD ; clear EEPGD to go to EEPROM address, set to
go to normal program memory. in this case, go to eeprom address
                bcf                     EECON1,CFGS ; CFGS: set => configuration , clear => memory
data
                bsf                     EECON1,RD       ; initialize EEPROM read
                btfsc           EECON1,RD               ;wait for read to finish, if bit RD of EECON1 is 0,
skip next instruction
                bra                     $-1
                movf            EEDATA,W ; move data read to W
                return

;-----------------------------------------------------------------
```

```
; LCD control
;-----------------------------------------------------------------

; This function switches LCD to the next line
Switch_Lines:
                    movlw  B'11000000'
                    call       WR_INS
                    return

; This function clears the Display
Clear_Display:
                    movlw  B'00000001'
                    call       WR_INS
                    return

Scroll_Menu:
                    movlw              b'00011000'                ;Move to the left
                    call               WR_INS
                    call               Delay
                    btfss              PORTB,1     ;Wait until data is available from the keypad
                    bra                          Scroll_Menu
                    btfsc              PORTB,1
                    bra                          $-1
                    return
;-----------------------------------------------------------------
; Stepper Motor Controls
;-----------------------------------------------------------------

; Model #1200 Pololu Stepper Motor: 1.8deg/step=> 200 steps per revolution => 200/6 => 33  or 34
steps. or 32 to simplify code.
                                ; For counter clockwise: Blue -> Green -> Red -> Black
                                ; Yellow and White connects to VSS

; Model #57BYGH420 Wantai Stepper Motor: 1.8deg/step => 200 steps per revolution => 200/6 => 33 or
34 steps or 32 to simplify code.

; Blue -> Green-> Red -> Black -> Clockwise
; Black -> Red -> Green -> Blue -> Counter clockwise

Stepper_Motor_4 ; Counter-clockwise
                    bsf    LATA, 1
                    call DelayStepperMotor ; Need delay to move motor
                    bcf    LATA, 1
                    bsf    LATA, 2
                    call DelayStepperMotor
                    bcf    LATA, 2
                    bsf    LATA, 3
                    call DelayStepperMotor
```

```
                bcf     LATA, 3
                bsf     LATA, 4
                call DelayStepperMotor
                bcf     LATA, 4
                return

Stepper_Motor_4_Clockwise
                bsf     LATA, 4
                call DelayStepperMotor ; Need delay to move motor
                bcf     LATA, 4
                bsf     LATA, 3
                call DelayStepperMotor
                bcf     LATA, 3
                bsf     LATA, 2
                call DelayStepperMotor
                bcf     LATA, 2
                bsf     LATA, 1
                call DelayStepperMotor
                bcf     LATA, 1
                return

Stepper_Motor_20:
        call Stepper_Motor_4
        call Stepper_Motor_4
        call Stepper_Motor_4
        call Stepper_Motor_4
        call Stepper_Motor_4
        return

Stepper_Motor_32:
        call Stepper_Motor_20
        call Stepper_Motor_4
        call Stepper_Motor_4
        call Stepper_Motor_4
        return

Stepper_Motor_40
        call Stepper_Motor_20
        call Stepper_Motor_20
        return

Stepper_Motor_200
        call Stepper_Motor_40
        call Stepper_Motor_40
        call Stepper_Motor_40
        call Stepper_Motor_40
        call Stepper_Motor_40
        return
```

```
; This subroutine moves the stepper motor for 60degrees (one actual complete movement)
Stepper_Motor_Once
        call            Clear_Display
        Display         Stepper_Motor_Debug3
        call Stepper_Motor_32
                                                                        ;call
        Clear_Display
                                                                        ;Display
        Stepper_Motor_Debug4
                                                                        ;call Stepper_Motor_200

        return

Stepper_Motor_Once_Debug
        call            Clear_Display
        Display         Stepper_Motor_Debug3
        call Stepper_Motor_32
        call            Clear_Display
        Display         Stepper_Motor_Debug4
        call Stepper_Motor_200
call DelayFlipper
        call            Clear_Display
        Display         Stepper_Motor_Debug11
        call Stepper_Motor_32
call DelayFlipper
        call            Clear_Display
        Display         Stepper_Motor_Debug12
        call Stepper_Motor_32
call DelayFlipper
        call            Clear_Display
        Display         Stepper_Motor_Debug13
        call Stepper_Motor_32
call DelayFlipper
        call            Clear_Display
        Display         Stepper_Motor_Debug14
        call Stepper_Motor_32
call DelayFlipper
        call            Clear_Display
        Display         Stepper_Motor_Debug15
        call Stepper_Motor_32
call DelayFlipper
        call            Clear_Display
        Display         Stepper_Motor_Debug16
        call Stepper_Motor_32
call DelayFlipper
        return
```

```
;-----------------------------------------------------------------
; Divide Function (for # of dowels)
;-----------------------------------------------------------------
div_10:
                ;divides a number by 10
                ;input: number to be divided in working register
                ;output: answer in working register
                ;will need to modify division factor based on weight sensor properties
                movwf  div_tmp              ;store number in temp register
                movlw  D'10'          ;number to divide by
                clrf   div_ans        ;reset div_ans
div_loop
                cpfsgt  div_tmp
                return
                subwf  div_tmp
                incf   div_ans
                bra            div_loop

;-----------------------------------------------------------------
; Menu_Delay (Exit if keypad is pressed)
;-----------------------------------------------------------------

; Keypad Delay to wait for input
Delay
        local   Delay_Loop
    movlw 0x88 ; 10001000, 136
    movwf COUNTH
    movlw 0xBD ; 10111101, 189
    movwf COUNTM
    movlw 0x04 ; 00000100 ; 4
    movwf COUNTL

Delay_Loop  ; loops till time out or if data is available
          btfsc   PORTB,1             ;Check if data is available from the keypad
                        return
    decfsz      COUNTH, f
    bra         Delay_Loop
    decfsz      COUNTM, f
    bra         Delay_Loop
    decfsz      COUNTL, f
    bra         Delay_Loop
    nop
    nop
                        return

;---------------------------------
```

```
;DELAY 1 Second with 20MHz clock
; Actual delay = 1 seconds = 5000000 cycles
; Error = 0 %

Delay1s
                        ;4999993 cycles
        movlw  0x2C
        movwf  delay1s_1
        movlw  0xE7
        movwf  delay1s_2
        movlw  0x0B
        movwf  delay1s_3
Delay1s_help
        decfsz  delay1s_1, f
        goto    $+2
        decfsz  delay1s_2, f
        goto    $+2
        decfsz  delay1s_3, f
        goto    Delay1s_help
                        ;3 cycles
        nop
        nop
                        ;4 cycles (including call)
        return

Delay1sori
                        ;4999993 cycles
        movlw  0x2C
        movwf  delay1s_1
        movlw  0xE7
        movwf  delay1s_2
        movlw  0x0B
        movwf  delay1s_3
Delay1sori_help
        decfsz  delay1s_1, f
        goto    $+2
        decfsz  delay1s_2, f
        goto    $+2
        decfsz  delay1s_3, f
        goto    Delay1s_help
                        ;3 cycles
        goto    $+1
        nop
                        ;4 cycles (including call)
        return

Delay5s
        call Delay1s
```

```
        call Delay1s
        call Delay1s
        call Delay1s
        call Delay1s
        return

Delay25s
        call Delay5s
        call Delay5s
        call Delay5s
        call Delay5s
        call Delay5s
        return

Delay1000s
        call Delay25s
        call Delay25s
        call Delay25s
        call Delay25s
        call Delay25s
        call Delay25s
        call Delay25s
        call Delay25s
        call Delay25s
        call Delay25s
        call Delay25s
        call Delay25s
        call Delay25s
        call Delay25s
        call Delay25s
        call Delay25s
        call Delay25s
        call Delay25s
        call Delay25s
        call Delay25s
        call Delay25s
        call Delay25s
        call Delay25s
        call Delay25s
        call Delay25s
        call Delay25s
        call Delay25s
        call Delay25s
        call Delay25s
        call Delay25s
        call Delay25s
        call Delay25s
        call Delay25s
        call Delay25s
        call Delay25s
```

```
        call Delay25s
        call Delay25s
        call Delay25s
        call Delay25s
        call Delay25s
        call Delay25s
        call Delay25s
        return

Delay10000s
        call Delay1000s
        call Delay1000s
        call Delay1000s
        call Delay1000s
        call Delay1000s
        call Delay1000s
        call Delay1000s
        call Delay1000s
        call Delay1000s
        call Delay1000s
        return

Delay100ks ;
        call Delay10000s;
        call Delay10000s;
        call Delay10000s;
        call Delay10000s;
        call Delay10000s;
        call Delay10000s;
        call Delay10000s;
        call Delay10000s;
        call Delay10000s;
        call Delay10000s;
        return

; Actual Delays

DelaySolenoid ; Delay for solenoids  Backup: Just 1 Delay10000
        call Delay10000s
        call Delay10000s
        return

DelayStepperMotorNew; Delay for Pololu Stepper motor
        call Delay1000s
        call Delay1000s
        return

DelayStepperMotor ; Delay for Hurst Stepper Motor (Needs to be longer)
```

```
        call Delay1000s
        call Delay1000s
        call Delay1000s
        call Delay1000s
        call Delay1000s
        return

DelayFlipper ; Delay for Flipper Motor
        call Delay100ks
        return

DelayMessage ; Delay for any short messages, especially during debugging to know what's going on
        call Delay10000s
        call Delay10000s
        return


;-----------------------------------------------------------------
; LCD-related subroutines
;-----------------------------------------------------------------
InitLCD
        bcf STATUS,0
        bsf E     ;E default high

        ;Wait for LCD POR to finish (~15ms)
        call lcdLongDelay
        call lcdLongDelay
        call lcdLongDelay

        ;Ensure 8-bit mode first (no way to immediately guarantee 4-bit mode)
        ; -> Send b'0011' 3 times
        movlw  b'00110011'
        call       WR_INS
        movlw  b'00110010'
        call       WR_INS

        ; 4 bits, 2 lines, 5x7 dots
        movlw  b'00101000'
        call       WR_INS

        ; display on/off
        movlw  b'00001100'
        call       WR_INS

        ; Entry mode
        movlw  b'00000110'
        call       WR_INS
```

```
        ; Clear ram
        movlw  b'00000001'
               call     WR_INS
        return

   ;ClrLCD: Clear the LCD display
ClrLCD
        movlw  B'00000001'
        call   WR_INS
   return

;-----------------------------------------------------------------
   ; Write command to LCD - Input : W , output : -
;-----------------------------------------------------------------
; Write LCD specific instructions to LCD
WR_INS
        bcf            RS                          ;clear RS
        movwf  com                          ;W --> com
        andlw  0xF0                   ;mask 4 bits MSB w = X0
        movwf  PORTD                  ;Send 4 bits MSB
        bsf            E                           ;
        call   lcdLongDelay   ;__  __
        bcf            E                           ; |__|
        swapf  com,w
        andlw  0xF0                   ;1111 0010
        movwf  PORTD                  ;send 4 bits LSB
        bsf            E                           ;
        call   lcdLongDelay   ;__  __
        bcf            E                           ; |__|
        call   lcdLongDelay
        return

;-----------------------------------------------------------------
   ; Write data to LCD - Input : W , output : -
;-----------------------------------------------------------------
; Write words that needs to be output to LCD
WR_DATA
        bsf            RS
        movwf  dat
        movf   dat,w
        andlw  0xF0
        addlw  4
        movwf  PORTD
        bsf            E                           ;
        call   lcdLongDelay   ;__  __
        bcf            E                           ; |__|
        swapf  dat,w
        andlw  0xF0
```

```
        addlw   4
        movwf  PORTD
        bsf             E                               ;
        call    lcdLongDelay    ;__   __
        bcf             E                               ;  |__|
        return

lcdLongDelay
   movlw d'20'
   movwf lcd_d2
LLD_LOOP
   LCD_DELAY
   decfsz lcd_d2,f
   goto LLD_LOOP
   return
;-----------------------------------------------------------------
; Interrupt Handling
;-----------------------------------------------------------------

; Interrupts
; Interrupt Flag bit
; Interrupt Enable bit
; Global Interrupt (disable/enable)
; reset vector is 0, when reset pic, it goes to 0.

; high priority can interrupt low priority interrupt but not vice versa.

 HighPriorityInterruptHandler:
        ; need declare temporary variables
MOVWF W_TEMP ; W_TEMP is in virtual bank
movf STATUS, w
mofw
MOVFF STATUS, STATUS_TEMP ; STATUS_TEMP located anywhere
MOVFF BSR, BSR_TEMP ; BSR_TMEP located anywhere
;-------- USER ISR CODE -----------

btfss INTCON3, 0 ; check if interrupt 1 is set, if it is, skip next line
goto  CHECKTWO
; Interrupt 1 code
bcf INTCON3, 0

                call            Clear_Display
                Display         BABA1
                call            DelaySolenoid


goto ENDINTERRUPT
```

```
CHECKTWO:
btfss INTCON3, 1 ; if interrupt 2 is set, skip next line
goto  ENDINTERRUPT
; Interrupt 2 code
bcf INTCON3, 1


                call            Clear_Display
                Display         BABA2
                call            DelaySolenoid


; Check which flag bit got set
; Increase the count for number of dowels
; DEBUG: Display haha for 2 seconds with delay

; clear flag bit
ENDINTERRUPT:
        MOVFF BSR_TEMP, BSR ; Restore BSR
        MOVF W_TEMP, W ; Restore WREG
        MOVFF STATUS_TEMP, STATUS ; Restore STATUS
        ; save bsr register?? pg 105
        ; identify which flag generated the interrupt..
        ; restore w register
        ; restore status register

                call            Clear_Display
                Display         BABA3
                call            DelaySolenoid
        retfie ; return interrupt


I2Cstart
        banksel SSPCON2
        bsf SSPCON2, SEN   ; start it
        banksel PIR1
Swait ; start wait
        btfss PIR1, SSPIF  ; wait for it to set == 1
        goto Swait
        bcf PIR1, SSPIF  ; clear it
        return


; sending by putting code/address/data to SSPBUF register
; Note, address must be in w before calling
i2cSend
        banksel SSPBUF
```

```
        movwf SSPBUF
        banksel PIR1
cwait ; clear wait
        btfss PIR1, SSPIF
        goto cwait
        bcf PIR1, SSPIF
        return


i2cStop
        banksel SSPCON2
        bsf SSPCON2, PEN
        banksel PIR1
Pwait
        btfss PIR1, SSPIF
        goto Pwait
        bcf PIR1, SSPIF
        return



;-----------------------------------------------------------------
; End
;-----------------------------------------------------------------
; For Debugging
InfiniteLoop:
        goto InfiniteLoop ;

; it never reaches end, it always goes to standby, though END signifies to MPLAB that this is the end of
the code
        END



; I2C write code
;I2Cwrite.asm
;
;i2C Master Mode Program
;for use in 24LC16B Serial EEPROM access by 16F877
;in I2C Master Mode Operation of SSP Module of 16F877 (with Fosc = 20 MHz ) ;
;1-byte data writing to 24LC16B
;
;
 list     p=16f877
INTCON EQU 0x0B STATUS EQU 0x03 ZERO EQU 0x00 PIR2 EQU 0x0D PIR1 EQU 0x0C SSPIF EQU 0x03
PIE1 EQU 0x8C
PIE2 EQU 0x8D
;for STATUS
```

```
;I2C Modules
;SSP Interrupt Flag (must be cleared for next I2C)
SSPCON
SSPEN
SSPCON2
PEN
SEN
SSPSTAT
SMP
SSPADD
baud100
baud400
TRISC
SSPBUF
;
;
org
goto START org 0x05
movlw 0x18 banksel TRISC movwf TRISC
;MSSP Module Setup movlw baud100
;0001 1000
  ;RC4 (SDA) and RC3(SCL) as inputs
  ;100KHz speed
  ;write baud rate
;1000 0000
;
banksel SSPADD movwf SSPADD
movlw 0x80 banksel SSPSTAT movwf SSPSTAT
EQU 0x14 EQU 0x05 EQU 0x91 EQU 0x02 EQU 0x00 EQU 0x94 EQU 0x07 EQU 0x93 EQU 0x31 EQU 0x0B
EQU 0x87 EQU 0x13
  ;SSP Enable bit
;SMP=1 for 100KHz, SMP=0 for 400KHz (Choose 100KHZ)
;100KHZ standard speed
;400KHz fast speed  ($0B)
;line 1
0x0000
START
;i2c operation INITIALIZATION
;PORTC setup  - SDA and SCL both as inputs
          ;100KHZ (no slew rate control)
;selection with I2C mode
;
movlw 0x28 ;0010 1000 (SSPEN=1, SSPM3:0= 1000 ) master mode banksel SSPCON
movwf SSPCON
;========================================================================== ;WRITING
for a byte data
;Sequence
;1. Start event <S>
```

```
;2. Send Control Byte for EPEROM with Write Op <C>
; CONTROL BYTE STRUCTURE OF 24LC16B
; 1010A2A1A0R/W
; The first 4-bit code is establisihed for serial EEPROM by the I2C Bus Specification
; Next 3 bits are for Block Select (26LC16B has 8 blocks, with each block having 256 Bytes)
;    R/W = 1 for reading
;    R/W = 0 for writing
;3. Wait for ACK from EEPROM (Use SSPIF of PIR1)<K> ;4. Send the address in a block of EEPROM<A>
;5. Wait for ACK from EEPROM<K>
;6 Send a byte of data<D>
;7. Wait for ACK from EEPROM <K>
;8. STop EVENT<P>
```

Embedded Computing with PIC 16F877 – Assembly Language Approach. Charles Kim © 2006


```
;9. Give 24LC16 a few ms to write the
data ;================================================================== ; SEQUENCE IN
WRITING
; PIC (master Side)>S>> >C>> >A>> >D>> >P>>
; 24LC16 (slave side) <<K< <<K<
<<K< ;=================================================================== ;
;Flag Clear
banksel PIR1
bcf PIR1, SSPIF ;clear the SSP flag
;>S>> START
call i2cStart
;>C>> CONTROL movlw 0xA0
call i2cSend ;block code write to 24LC16 ;>A>> ADDRESS
movlw 0x00 ;address info
call i2cSend ;>D>> DATA
movlw 'm' ;1 byte data
call i2cSend ;>P>> STOP
call i2cStop
call delay10ms ;Give 24LC16B time to write the data
;your subroutines here
;your subroutines here
    END
```

15.3 PIC18F4620 DATA SHEET (PAGE 1 OF 390)

MICROCHIP

PIC18F2525/2620/4525/4620
Data Sheet

28/40/44-Pin
Enhanced Flash Microcontrollers
with 10-Bit A/D and nanoWatt Technology

© 2004 Microchip Technology Inc. Preliminary DS39626B

15.4 Additional Data Sheets

LM117/LM317A/LM317-N 3-Terminal Adjustable Regulator

Check for Samples: LM117, LM317-N

FEATURES

- **Specified 1% Output Voltage Tolerance (LM317A)**
- **Specified Max. 0.01%/V Line Regulation (LM317A)**
- **Specified Max. 0.3% Load Regulation (LM117)**
- **Specified 1.5A Output Current**
- **Adjustable Output Down to 1.2V**
- **Current Limit Constant With Temperature**
- **P^+ Product Enhancement Tested**
- **80 dB Ripple Rejection**
- **Output is Short-Circuit Protected**

DESCRIPTION

The LM117 series of adjustable 3-terminal positive voltage regulators is capable of supplying in excess of 1.5A over a 1.2V to 37V output range. They are exceptionally easy to use and require only two external resistors to set the output voltage. Further, both line and load regulation are better than standard fixed regulators. Also, the LM117 is packaged in standard transistor packages which are easily mounted and handled.

In addition to higher performance than fixed regulators, the LM117 series offers full overload protection available only in IC's. Included on the chip are current limit, thermal overload protection and safe area protection. All overload protection circuitry remains fully functional even if the adjustment terminal is disconnected.

Normally, no capacitors are needed unless the device is situated more than 6 inches from the input filter capacitors in which case an input bypass is needed. An optional output capacitor can be added to improve transient response. The adjustment terminal can be bypassed to achieve very high ripple rejection ratios which are difficult to achieve with standard 3-terminal regulators.

Besides replacing fixed regulators, the LM117 is useful in a wide variety of other applications. Since the regulator is “floating” and sees only the input-to-output differential voltage, supplies of several hundred volts can be regulated as long as the maximum input to output differential is not exceeded, i.e., avoid short-circuiting the output.

Also, it makes an especially simple adjustable switching regulator, a programmable output regulator, or by connecting a fixed resistor between the adjustment pin and output, the LM117 can be used as a precision current regulator. Supplies with electronic shutdown can be achieved by clamping the adjustment terminal to ground which programs the output to 1.2V where most loads draw little current.

For applications requiring greater output current, see LM150 series (3A) and LM138 series (5A) data sheets. For the negative complement, see LM137 series data sheet.

Please be aware that an important notice concerning availability, standard warranty, and use in critical applications of Texas Instruments semiconductor products and disclaimers thereto appears at the end of this data sheet.

All trademarks are the property of their respective owners.

PRODUCTION DATA information is current as of publication date. Products conform to specifications per the terms of the Texas Instruments standard warranty. Production processing does not necessarily include testing of all parameters.

Copyright © 2004–2011, Texas Instruments Incorporated

Typical Applications

Figure 1. 1.2V–25V Adjustable Regulator

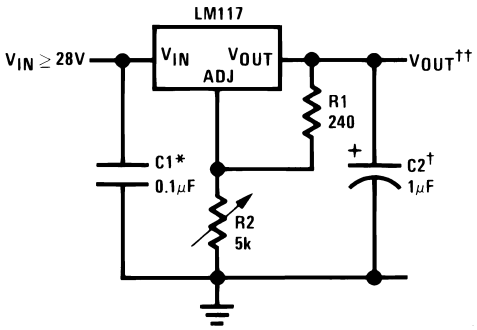

Full output current not available at high input-output voltages
*Needed if device is more than 6 inches from filter capacitors.
†Optional—improves transient response. Output capacitors in the range of 1μF to 1000μF of aluminum or tantalum electrolytic are commonly used to provide improved output impedance and rejection of transients.

$$\dagger\dagger V_{OUT} = 1.25V\left(1 + \frac{R2}{R1}\right) + I_{ADJ}(R_2)$$

LM117/LM317A/LM317-N Package Options

Part Number	Suffix	Package	Output Current
LM117, LM317-N	NDS	TO-3	1.5A
LM317A, LM317-N	NDE	TO-220	1.5A
LM317-N	KTT	TO-263	1.5A
LM317A, LM317-N	DCY	SOT-223	1.0A
LM117, LM317A, LM317-N	NDT	TO	0.5A
LM117	NAJ	LCCC	0.5A
LM317A, LM317-N	NDP	PFM	0.5A

SOT-223 vs. PFM Packages

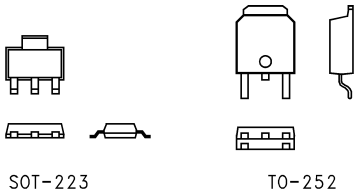

Figure 2. Scale 1:1

Connection Diagrams

TO-3 (NDS) Metal Can Package

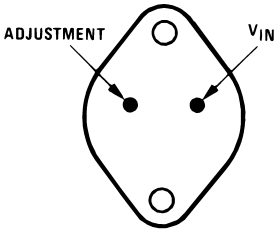

CASE IS OUTPUT

Figure 3. Bottom View Bottom View Package Number NDS or K

TO (NDT) Metal Can Package

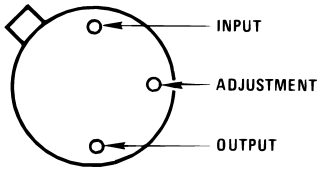

CASE IS OUTPUT

Figure 4. Bottom View Package Number NDT

Figure 5. TO-263 (KTT) Surface-Mount Package

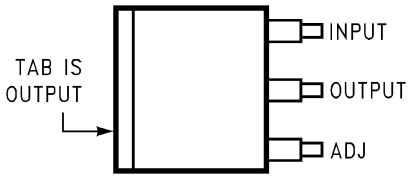

Figure 6. Top View

TO-263 (KTT) Surface-Mount Package

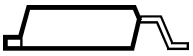

Figure 7. Side View Package Number KTT

Copyright © 2004–2011, Texas Instruments Incorporated

TO-220 (NDE)
Plastic Package

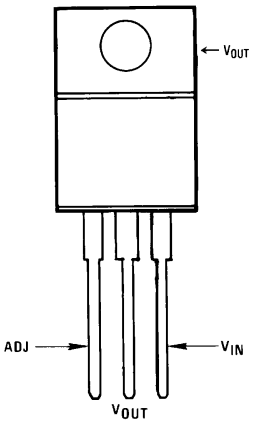

Figure 8. Front View
Package Number NDE

Ceramic Leadless Chip Carrier (NAJ)

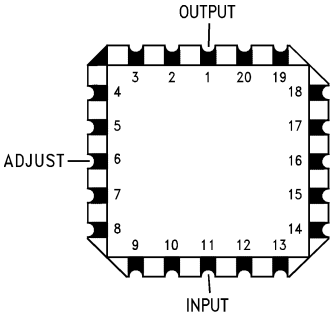

Figure 9. Top View
Package Number NAJ

4-Lead SOT-223 (DCY)

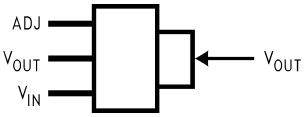

Figure 10. Front View
Package Number DCY

PFM (NDP)

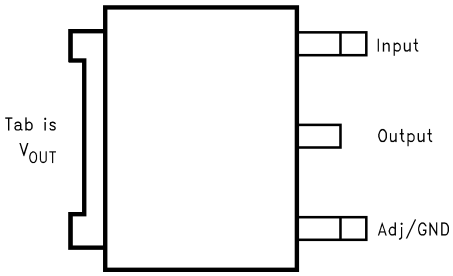

Figure 11. Front View
Package Number NDP

These devices have limited built-in ESD protection. The leads should be shorted together or the device placed in conductive foam during storage or handling to prevent electrostatic damage to the MOS gates.

Absolute Maximum Ratings[1][2]

Power Dissipation		Internally Limited
Input-Output Voltage Differential		+40V, −0.3V
Storage Temperature		−65°C to +150°C
Lead Temperature	Metal Package (Soldering, 10 seconds)	300°C
	Plastic Package (Soldering, 4 seconds)	260°C
ESD Tolerance [3]		3 kV

(1) Absolute Maximum Ratings indicate limits beyond which damage to the device may occur. Operating Ratings indicate conditions for which the device is intended to be functional, but do not ensure specific performance limits. For ensured specifications and test conditions, see the Electrical Characteristics. The ensured specifications apply only for the test conditions listed.
(2) If Military/Aerospace specified devices are required, please contact the Texas Instruments Sales Office/Distributors for availability and specifications.
(3) Human body model, 100 pF discharged through a 1.5 kΩ resistor.

Operating Temperature Range

LM117	−55°C ≤ T_J ≤ +150°C
LM317A	−40°C ≤ T_J ≤ +125°C
LM317-N	0°C ≤ T_J ≤ +125°C
Preconditioning	
Thermal Limit Burn-In	All Devices 100%

LM117 Electrical Characteristics[1]

Specifications with standard type face are for T_J = 25°C, and those with **boldface type** apply over **full Operating Temperature Range**. Unless otherwise specified, $V_{IN} - V_{OUT}$ = 5V, and I_{OUT} = 10 mA.

Parameter	Conditions		LM117 [2]			
			Min	Typ	Max	Units
Reference Voltage	3V ≤ ($V_{IN} - V_{OUT}$) ≤ 40V, 10 mA ≤ I_{OUT} ≤ I_{MAX} [1]		**1.20**	**1.25**	**1.30**	V
Line Regulation	3V ≤ ($V_{IN} - V_{OUT}$) ≤ 40V [3]			0.01 **0.02**	0.02 **0.05**	%/V
Load Regulation	10 mA ≤ I_{OUT} ≤ I_{MAX} [1] [3]			0.1 **0.3**	0.3 **1**	%
Thermal Regulation	20 ms Pulse			0.03	0.07	%/W
Adjustment Pin Current				**50**	**100**	µA
Adjustment Pin Current Change	10 mA ≤ I_{OUT} ≤ I_{MAX} [1] 3V ≤ ($V_{IN} - V_{OUT}$) ≤ 40V			**0.2**	**5**	µA
Temperature Stability	T_{MIN} ≤ T_J ≤ T_{MAX}			**1**		%
Minimum Load Current	($V_{IN} - V_{OUT}$) = 40V			**3.5**	**5**	mA
Current Limit	($V_{IN} - V_{OUT}$) ≤ 15V	NDS Package	**1.5**	**2.2**	**3.4**	A
		NDT, NAJ Package	**0.5**	**0.8**	**1.8**	
	($V_{IN} - V_{OUT}$) = 40V	NDS Package	0.3	0.4		A
		NDT, NAJ Package	0.15	0.20		
RMS Output Noise, % of V_{OUT}	10 Hz ≤ f ≤ 10 kHz			0.003		%

(1) I_{MAX} = 1.5A for the NDS (TO-3), NDE (TO-220), and KTT (TO-263) packages. I_{MAX} = 1.0A for the DCY (SOT-223) package. I_{MAX} = 0.5A for the NDT (TO), MDT (PFM), and NAJ (LCCC) packages. Device power dissipation (P_D) is limited by ambient temperature (T_A), device maximum junction temperature (T_J), and package thermal resistance (θ_{JA}). The maximum allowable power dissipation at any temperature is : $P_{D(MAX)} = ((T_{J(MAX)} - T_A)/\theta_{JA})$. All Min. and Max. limits are ensured to TI's Average Outgoing Quality Level (AOQL).
(2) Refer to RETS117H drawing for the LM117H, or the RETS117K for the LM117K military specifications.
(3) Regulation is measured at a constant junction temperature, using pulse testing with a low duty cycle. Changes in output voltage due to heating effects are covered under the specifications for thermal regulation.

Copyright © 2004–2011, Texas Instruments Incorporated

LM117 Electrical Characteristics[1] (continued)

Specifications with standard type face are for T_J = 25°C, and those with **boldface type** apply over **full Operating Temperature Range**. Unless otherwise specified, $V_{IN} - V_{OUT}$ = 5V, and I_{OUT} = 10 mA.

Parameter	Conditions	LM117 [2]			
		Min	Typ	Max	Units
Ripple Rejection Ratio	V_{OUT} = 10V, f = 120 Hz, C_{ADJ} = 0 µF		**65**		dB
	V_{OUT} = 10V, f = 120 Hz, C_{ADJ} = 10 µF	**66**	**80**		dB
Long-Term Stability	T_J = 125°C, 1000 hrs		0.3	1	%
Thermal Resistance, θ_{JC} Junction-to-Case	NDS (TO-3) Package		2		°C/W
	NDT (TO) Package		21		
	NAJ (LCCC) Package		12		
Thermal Resistance, θ_{JA} Junction-to-Ambient (No Heat Sink)	NDS (TO-3) Package		39		°C/W
	NDT (TO) Package		186		
	NAJ (LCCC) Package		88		

LM317A and LM317-N Electrical Characteristics[1]

Specifications with standard type face are for T_J = 25°C, and those with **boldface type** apply over **full Operating Temperature Range**. Unless otherwise specified, $V_{IN} - V_{OUT}$ = 5V, and I_{OUT} = 10 mA.

Parameter	Conditions		LM317A			LM317-N			
			Min	Typ	Max	Min	Typ	Max	Units
Reference Voltage			1.238	1.250	1.262	-	1.25	-	V
	3V ≤ ($V_{IN} - V_{OUT}$) ≤ 40V, 10 mA ≤ I_{OUT} ≤ I_{MAX} [1]		**1.225**	**1.250**	**1.270**	**1.20**	**1.25**	**1.30**	V
Line Regulation	3V ≤ ($V_{IN} - V_{OUT}$) ≤ 40V [2]			0.005 **0.01**	0.01 **0.02**		0.01 **0.02**	0.04 **0.07**	%/V
Load Regulation	10 mA ≤ I_{OUT} ≤ I_{MAX} [1] [2]			0.1 **0.3**	0.5 **1**		0.1 **0.3**	0.5 **1.5**	%
Thermal Regulation	20 ms Pulse			0.04	0.07		0.04	0.07	%/W
Adjustment Pin Current				**50**	**100**		**50**	**100**	µA
Adjustment Pin Current Change	10 mA ≤ I_{OUT} ≤ I_{MAX} [1] 3V ≤ ($V_{IN} - V_{OUT}$) ≤ 40V			**0.2**	**5**		**0.2**	**5**	µA
Temperature Stability	T_{MIN} ≤ T_J ≤ T_{MAX}			**1**			**1**		%
Minimum Load Current	($V_{IN} - V_{OUT}$) = 40V			**3.5**	**10**		**3.5**	**10**	mA
Current Limit	($V_{IN} - V_{OUT}$) ≤ 15V	NDS, KTT Packages	-	-	-	**1.5**	**2.2**	**3.4**	A
		DCY, NDE Packages	**1.5**	**2.2**	**3.4**	**1.5**	**2.2**	**3.4**	
		NDT, MDT Packages	**0.5**	**0.8**	**1.8**	**0.5**	**0.8**	**1.8**	
	($V_{IN} - V_{OUT}$) = 40V	NDS, KTT Packages	-	-		0.15	0.40		A
		DCY, NDE Packages	0.112	0.30		0.112	0.30		
		NDT, MDT Packages	0.075	0.20		0.075	0.20		
RMS Output Noise, % of V_{OUT}	10 Hz ≤ f ≤ 10 kHz			0.003			0.003		%
Ripple Rejection Ratio	V_{OUT} = 10V, f = 120 Hz, C_{ADJ} = 0 µF			**65**			**65**		dB
	V_{OUT} = 10V, f = 120 Hz, C_{ADJ} = 10 µF		**66**	**80**		**66**	**80**		dB
Long-Term Stability	T_J = 125°C, 1000 hrs			0.3	1		0.3	1	%

(1) I_{MAX} = 1.5A for the NDS (TO-3), NDE (TO-220), and KTT (TO-263) packages. I_{MAX} = 1.0A for the DCY (SOT-223) package. I_{MAX} = 0.5A for the NDT (TO), MDT (PFM), and NAJ (LCCC) packages. Device power dissipation (P_D) is limited by ambient temperature (T_A), device maximum junction temperature (T_J), and package thermal resistance (θ_{JA}). The maximum allowable power dissipation at any temperature is : $P_{D(MAX)} = ((T_{J(MAX)} - T_A)/\theta_{JA})$. All Min. and Max. limits are ensured to TI's Average Outgoing Quality Level (AOQL).
(2) Regulation is measured at a constant junction temperature, using pulse testing with a low duty cycle. Changes in output voltage due to heating effects are covered under the specifications for thermal regulation.

Copyright © 2004–2011, Texas Instruments Incorporated

LM317A and LM317-N Electrical Characteristics[1] (continued)

Specifications with standard type face are for T_J = 25°C, and those with **boldface type** apply over **full Operating Temperature Range**. Unless otherwise specified, $V_{IN} - V_{OUT}$ = 5V, and I_{OUT} = 10 mA.

Parameter	Conditions	LM317A			LM317-N			
		Min	Typ	Max	Min	Typ	Max	Units
Thermal Resistance, θ_{JC} Junction-to-Case	NDS (TO-3) Package		-			2		°C/W
	NDE (TO-220) Package		4			4		
	KTT (TO-263) Package		-			4		
	DCY (SOT-223) Package		23.5			23.5		
	NDT (TO) Package		21			21		
	MDT (PFM) Package		12			12		
Thermal Resistance, θ_{JA} Junction-to-Ambient (No Heat Sink)	NDS (TO-3) Package		-			39		°C/W
	NDE (TO-220) Package		50			50		
	KTT (TO-263) Package [3]		-			50		
	DCY (SOT-223) Package [3]		140			140		
	NDT (TO) Package		186			186		
	MDT (PFM) Package [3]		103			103		

(3) When surface mount packages are used (TO-263, SOT-223, PFM), the junction to ambient thermal resistance can be reduced by increasing the PC board copper area that is thermally connected to the package. See the Applications Hints section for heatsink techniques.

Copyright © 2004–2011, Texas Instruments Incorporated

Typical Performance Characteristics

Output Capacitor = 0 μF unless otherwise noted

Load Regulation

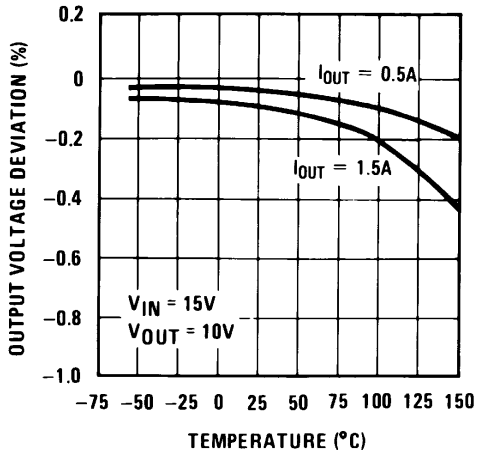

Figure 12.

Current Limit

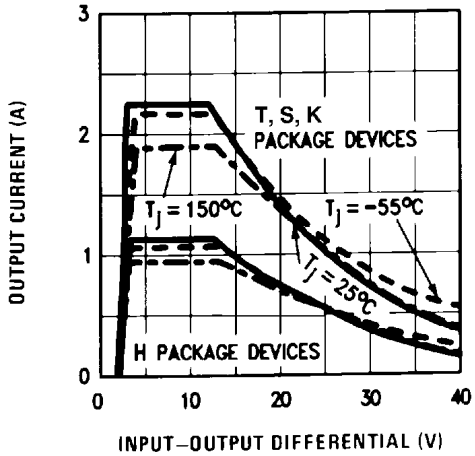

Figure 13.

Adjustment Current

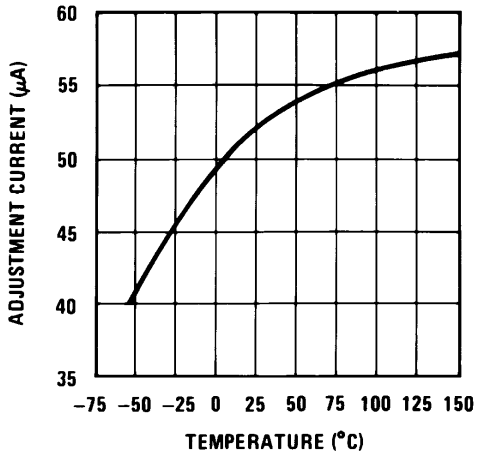

Figure 14.

Dropout Voltage

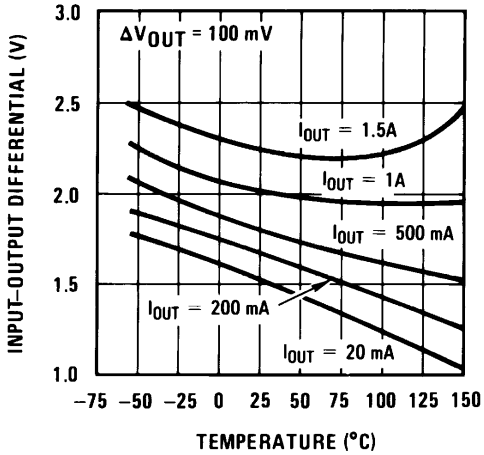

Figure 15.

V_{OUT} vs V_{IN}, V_{OUT} = V_{REF}

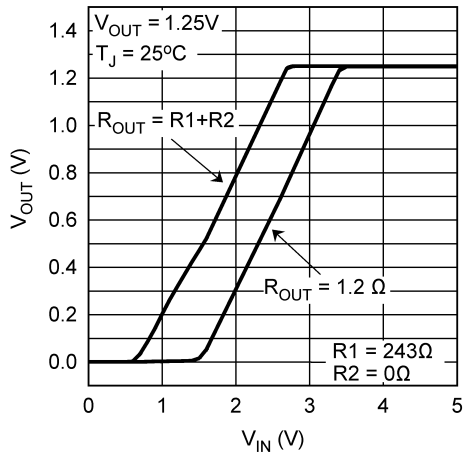

Figure 16.

V_{OUT} vs V_{IN}, V_{OUT} = 5V

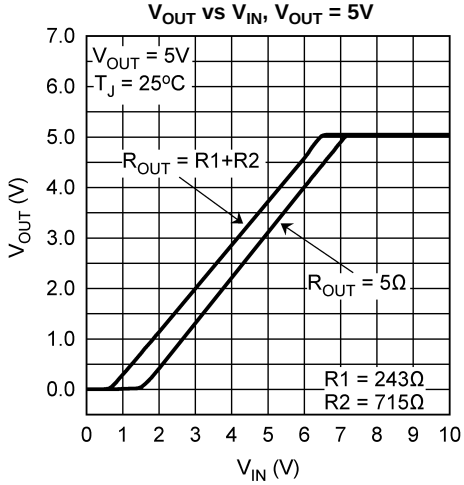

Figure 17.

Typical Performance Characteristics (continued)

Output Capacitor = 0 µF unless otherwise noted

Temperature Stability

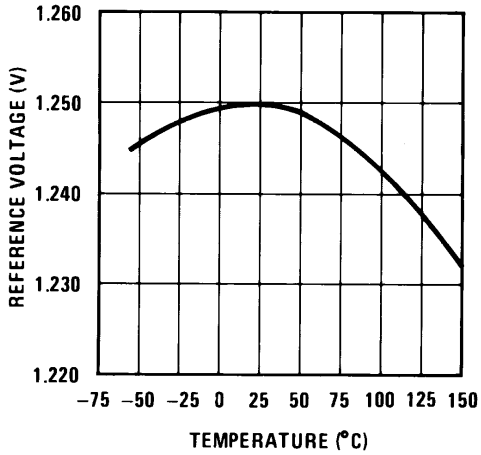

Figure 18.

Minimum Operating Current

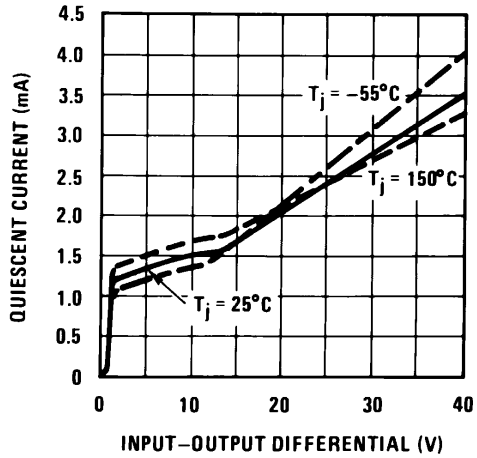

Figure 19.

Ripple Rejection

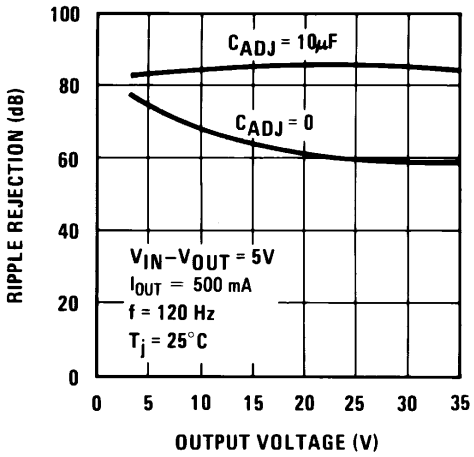

Figure 20.

Ripple Rejection

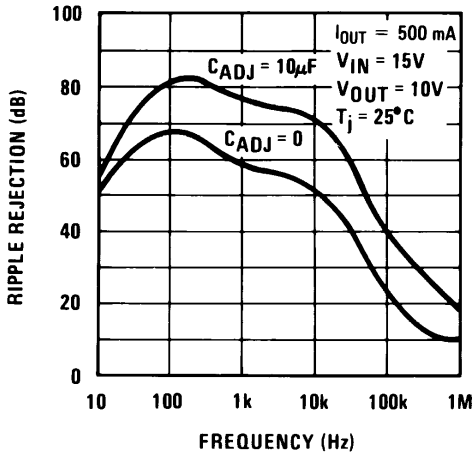

Figure 21.

Ripple Rejection

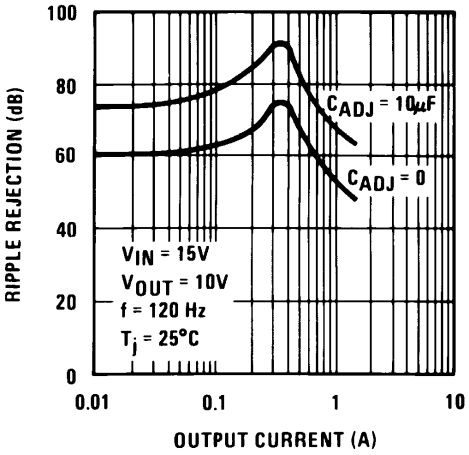

Figure 22.

Output Impedance

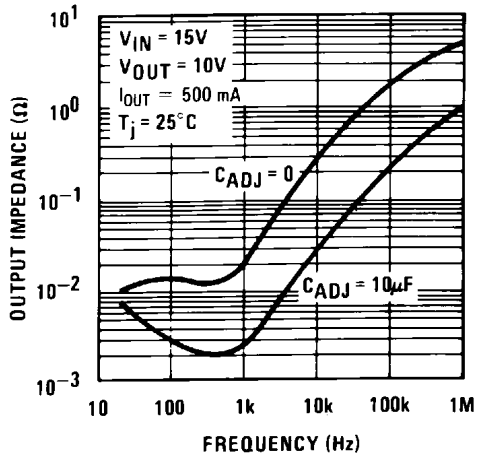

Figure 23.

Copyright © 2004–2011, Texas Instruments Incorporated

Typical Performance Characteristics (continued)

Output Capacitor = 0 μF unless otherwise noted

Line Transient Response

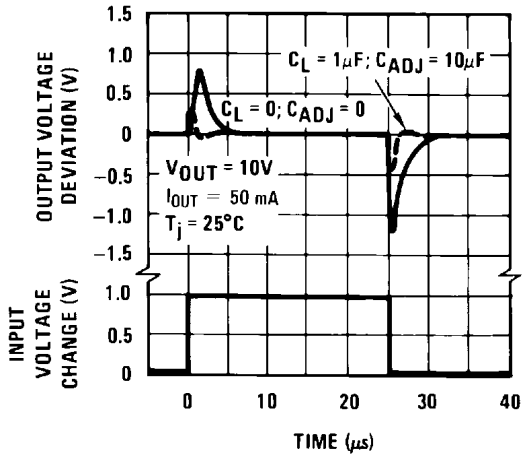

Figure 24.

Load Transient Response

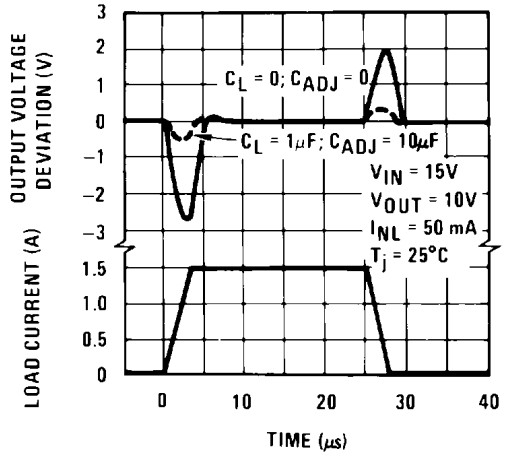

Figure 25.

APPLICATION HINTS

In operation, the LM117 develops a nominal 1.25V reference voltage, V_{REF}, between the output and adjustment terminal. The reference voltage is impressed across program resistor R1 and, since the voltage is constant, a constant current I_1 then flows through the output set resistor R2, giving an output voltage of

$$V_{OUT} = V_{REF}\left(1 + \frac{R2}{R1}\right) + I_{ADJ}R2 \tag{1}$$

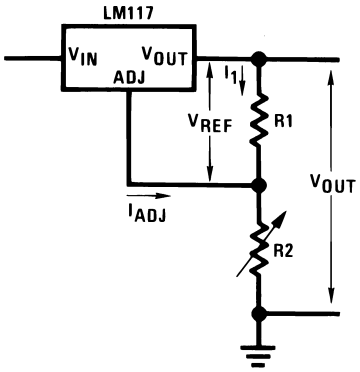

Since the 100μA current from the adjustment terminal represents an error term, the LM117 was designed to minimize I_{ADJ} and make it very constant with line and load changes. To do this, all quiescent operating current is returned to the output establishing a minimum load current requirement. If there is insufficient load on the output, the output will rise.

External Capacitors

An input bypass capacitor is recommended. A 0.1μF disc or 1μF solid tantalum on the input is suitable input bypassing for almost all applications. The device is more sensitive to the absence of input bypassing when adjustment or output capacitors are used but the above values will eliminate the possibility of problems.

The adjustment terminal can be bypassed to ground on the LM117 to improve ripple rejection. This bypass capacitor prevents ripple from being amplified as the output voltage is increased. With a 10 μF bypass capacitor 80dB ripple rejection is obtainable at any output level. Increases over 10 μF do not appreciably improve the ripple rejection at frequencies above 120Hz. If the bypass capacitor is used, it is sometimes necessary to include protection diodes to prevent the capacitor from discharging through internal low current paths and damaging the device.

Copyright © 2004–2011, Texas Instruments Incorporated

In general, the best type of capacitors to use is solid tantalum. Solid tantalum capacitors have low impedance even at high frequencies. Depending upon capacitor construction, it takes about 25 µF in aluminum electrolytic to equal 1µF solid tantalum at high frequencies. Ceramic capacitors are also good at high frequencies; but some types have a large decrease in capacitance at frequencies around 0.5 MHz. For this reason, 0.01 µF disc may seem to work better than a 0.1 µF disc as a bypass.

Although the LM117 is stable with no output capacitors, like any feedback circuit, certain values of external capacitance can cause excessive ringing. This occurs with values between 500 pF and 5000 pF. A 1 µF solid tantalum (or 25 µF aluminum electrolytic) on the output swamps this effect and insures stability. Any increase of the load capacitance larger than 10 µF will merely improve the loop stability and output impedance.

Load Regulation

The LM117 is capable of providing extremely good load regulation but a few precautions are needed to obtain maximum performance. The current set resistor connected between the adjustment terminal and the output terminal (usually 240Ω) should be tied directly to the output (case) of the regulator rather than near the load. This eliminates line drops from appearing effectively in series with the reference and degrading regulation. For example, a 15V regulator with 0.05Ω resistance between the regulator and load will have a load regulation due to line resistance of 0.05Ω × I_L. If the set resistor is connected near the load the effective line resistance will be 0.05Ω (1 + R2/R1) or in this case, 11.5 times worse.

Figure 26 shows the effect of resistance between the regulator and 240Ω set resistor.

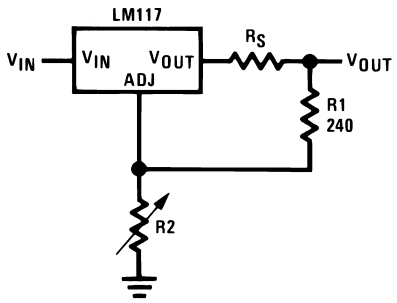

Figure 26. Regulator with Line Resistance in Output Lead

With the TO-3 package, it is easy to minimize the resistance from the case to the set resistor, by using two separate leads to the case. However, with the TO package, care should be taken to minimize the wire length of the output lead. The ground of R2 can be returned near the ground of the load to provide remote ground sensing and improve load regulation.

Protection Diodes

When external capacitors are used with any IC regulator it is sometimes necessary to add protection diodes to prevent the capacitors from discharging through low current points into the regulator. Most 10 µF capacitors have low enough internal series resistance to deliver 20A spikes when shorted. Although the surge is short, there is enough energy to damage parts of the IC.

When an output capacitor is connected to a regulator and the input is shorted, the output capacitor will discharge into the output of the regulator. The discharge current depends on the value of the capacitor, the output voltage of the regulator, and the rate of decrease of V_{IN}. In the LM117, this discharge path is through a large junction that is able to sustain 15A surge with no problem. This is not true of other types of positive regulators. For output capacitors of 25 µF or less, there is no need to use diodes.

The bypass capacitor on the adjustment terminal can discharge through a low current junction. Discharge occurs when *either* the input, or the output, is shorted. Internal to the LM117 is a 50Ω resistor which limits the peak discharge current. No protection is needed for output voltages of 25V or less and 10 µF capacitance. *Figure 27* shows an LM117 with protection diodes included for use with outputs greater than 25V and high values of output capacitance.

Copyright © 2004–2011, Texas Instruments Incorporated

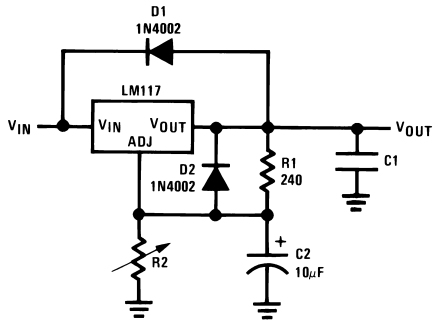

$$V_{OUT} = 1.25V\left(1 + \frac{R2}{R1}\right) + I_{ADJ}R2$$

D1 protects against C1
D2 protects against C2

Figure 27. Regulator with Protection Diodes

Heatsink Requirements

The LM317-N regulators have internal thermal shutdown to protect the device from over-heating. Under all operating conditions, the junction temperature of the LM317-N should not exceed the rated maximum junction temperature (T_J) of 150°C for the LM117, or 125°C for the LM317A and LM317-N. A heatsink may be required depending on the maximum device power dissipation and the maximum ambient temperature of the application. To determine if a heatsink is needed, the power dissipated by the regulator, P_D, must be calculated:

$$P_D = ((V_{IN} - V_{OUT}) \times I_L) + (V_{IN} \times I_G) \quad (2)$$

Figure 28 shows the voltage and currents which are present in the circuit.

The next parameter which must be calculated is the maximum allowable temperature rise, $T_{R(MAX)}$:

$$T_{R(MAX)} = T_{J(MAX)} - T_{A(MAX)} \quad (3)$$

where $T_{J(MAX)}$ is the maximum allowable junction temperature (150°C for the LM117, or 125°C for the LM317A/LM317-N), and $T_{A(MAX)}$ is the maximum ambient temperature which will be encountered in the application.

Using the calculated values for $T_{R(MAX)}$ and P_D, the maximum allowable value for the junction-to-ambient thermal resistance (θ_{JA}) can be calculated:

$$\theta_{JA} = (T_{R(MAX)} / P_D) \quad (4)$$

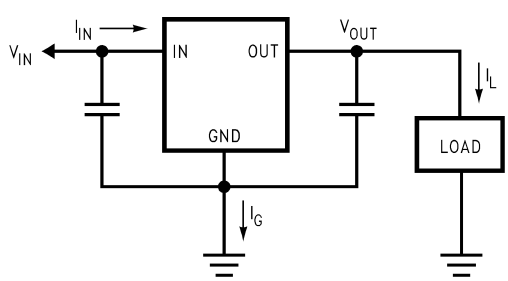

Figure 28. Power Dissipation Diagram

If the calculated maximum allowable thermal resistance is higher than the actual package rating, then no additional work is needed. If the calculated maximum allowable thermal resistance is lower than the actual package rating either the power dissipation (P_D) needs to be reduced, the maximum ambient temperature $T_{A(MAX)}$ needs to be reduced, the thermal resistance (θ_{JA}) must be lowered by adding a heatsink, or some combination of these.

If a heatsink is needed, the value can be calculated from the formula:

$$\theta_{HA} \leq (\theta_{JA} - (\theta_{CH} + \theta_{JC})) \quad (5)$$

Copyright © 2004–2011, Texas Instruments Incorporated

where (θ_{CH} is the thermal resistance of the contact area between the device case and the heatsink surface, and θ_{JC} is thermal resistance from the junction of the die to surface of the package case.

When a value for $\theta_{(H-A)}$ is found using the equation shown, a heatsink must be selected that has a value that is less than, or equal to, this number.

The $\theta_{(H-A)}$ rating is specified numerically by the heatsink manufacturer in the catalog, or shown in a curve that plots temperature rise vs power dissipation for the heatsink.

Heatsinking Surface Mount Packages

The TO-263 (KTT), SOT-223 (DCY) and PFM (MDT) packages use a copper plane on the PCB and the PCB itself as a heatsink. To optimize the heat sinking ability of the plane and PCB, solder the tab of the package to the plane.

Heatsinking the SOT-223 Package

Figure 29 and Figure 30 show the information for the SOT-223 package. Figure 30 assumes a $\theta_{(J-A)}$ of 74°C/W for 1 ounce copper and 51°C/W for 2 ounce copper and a maximum junction temperature of 125°C. Please see AN-1028 (literature number SNVA036) for thermal enhancement techniques to be used with SOT-223 and PFM packages.

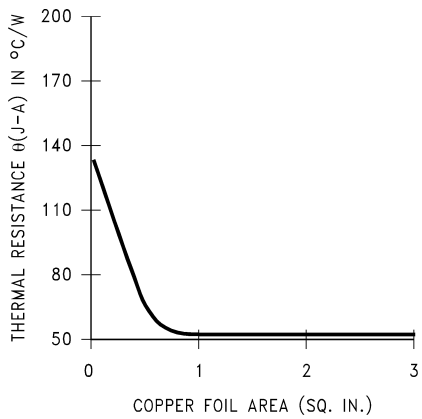

Figure 29. $\theta_{(J-A)}$ vs Copper (2 ounce) Area for the SOT-223 Package

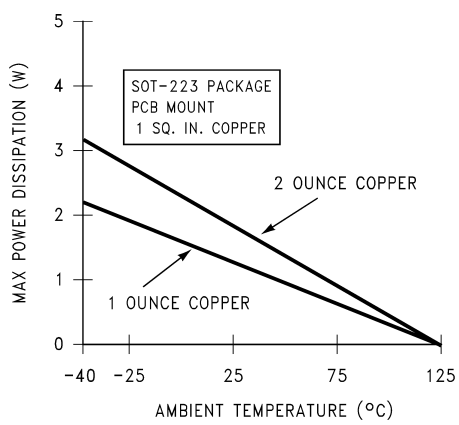

Figure 30. Maximum Power Dissipation vs T_{AMB} for the SOT-223 Package

Heatsinking the TO-263 Package

Figure 31 shows for the TO-263 the measured values of $\theta_{(J-A)}$ for different copper area sizes using a typical PCB with 1 ounce copper and no solder mask over the copper area used for heatsinking.

Copyright © 2004–2011, Texas Instruments Incorporated

As shown in Figure 31, increasing the copper area beyond 1 square inch produces very little improvement. It should also be observed that the minimum value of $\theta_{(J-A)}$ for the TO-263 package mounted to a PCB is 32°C/W.

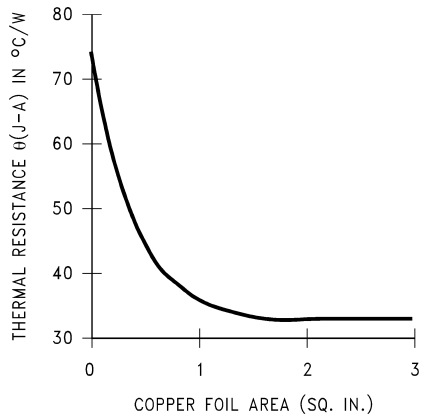

Figure 31. $\theta_{(J-A)}$ vs Copper (1 ounce) Area for the TO-263 Package

As a design aid, Figure 32 shows the maximum allowable power dissipation compared to ambient temperature for the TO-263 device (assuming $\theta_{(J-A)}$ is 35°C/W and the maximum junction temperature is 125°C).

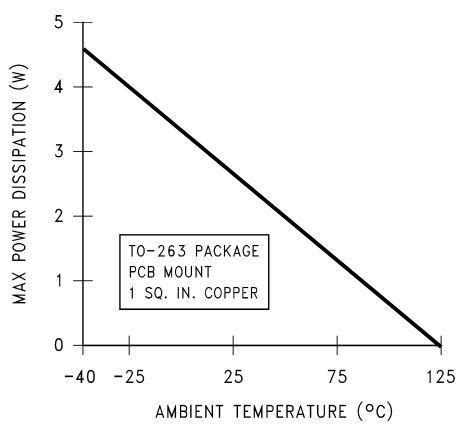

Figure 32. Maximum Power Dissipation vs T_{AMB} for the TO-263 Package

Heatsinking the PFM Package

If the maximum allowable value for θ_{JA} is found to be ≥103°C/W (Typical Rated Value) for PFM package, no heatsink is needed since the package alone will dissipate enough heat to satisfy these requirements. If the calculated value for θ_{JA} falls below these limits, a heatsink is required.

As a design aid, Table 1 shows the value of the θ_{JA} of PFM for different heatsink area. The copper patterns that we used to measure these θ_{JA}s are shown in Figure 37. Figure 33 reflects the same test results as what are in Table 1.

Figure 34 shows the maximum allowable power dissipation vs. ambient temperature for the PFM device. Figure 35 shows the maximum allowable power dissipation vs. copper area (in^2) for the PFM device. Please see AN-1028 (literature number SNVA036) for thermal enhancement techniques to be used with SOT-223 and PFM packages.

Table 1. θ_{JA} Different Heatsink Area

Layout	Copper Area		Thermal Resistance (θ_{JA}°C/W) PFM
	Top Side (in^2)(1)	Bottom Side (in^2)	
1	0.0123	0	103
2	0.066	0	87
3	0.3	0	60
4	0.53	0	54
5	0.76	0	52
6	1.0	0	47
7	0.066	0.2	84
8	0.066	0.4	70
9	0.066	0.6	63
10	0.066	0.8	57
11	0.066	1.0	57
12	0.066	0.066	89
13	0.175	0.175	72
14	0.284	0.284	61
15	0.392	0.392	55
16	0.5	0.5	53

(1) Tab of device attached to topside of copper.

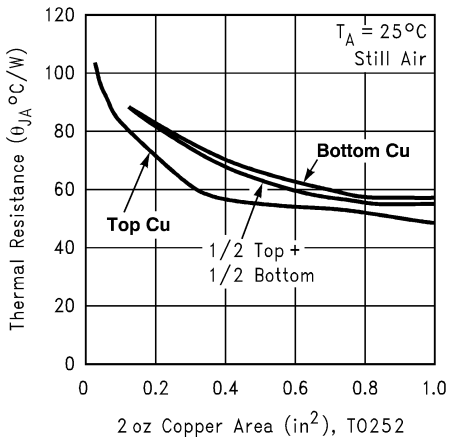

Figure 33. θ_{JA} vs 2oz Copper Area for PFM

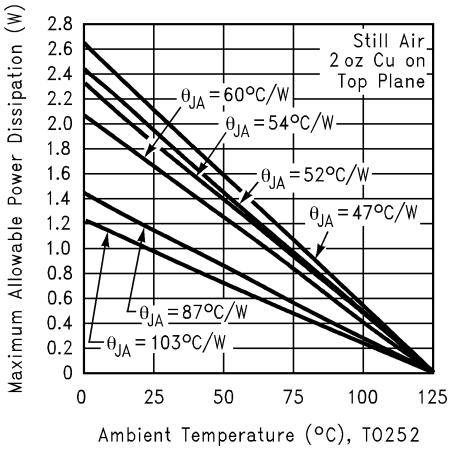

Figure 34. Maximum Allowable Power Dissipation vs. Ambient Temperature for PFM

Copyright © 2004–2011, Texas Instruments Incorporated

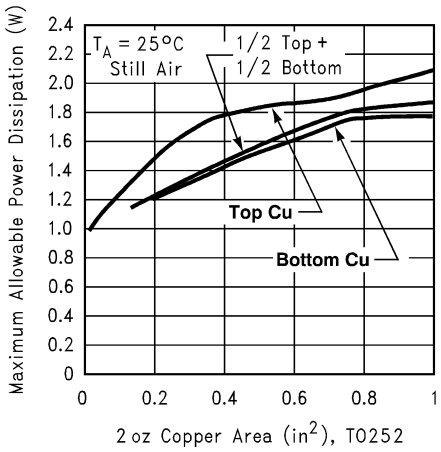

Figure 35. Maximum Allowable Power Dissipation vs. 2oz Copper Area for PFM

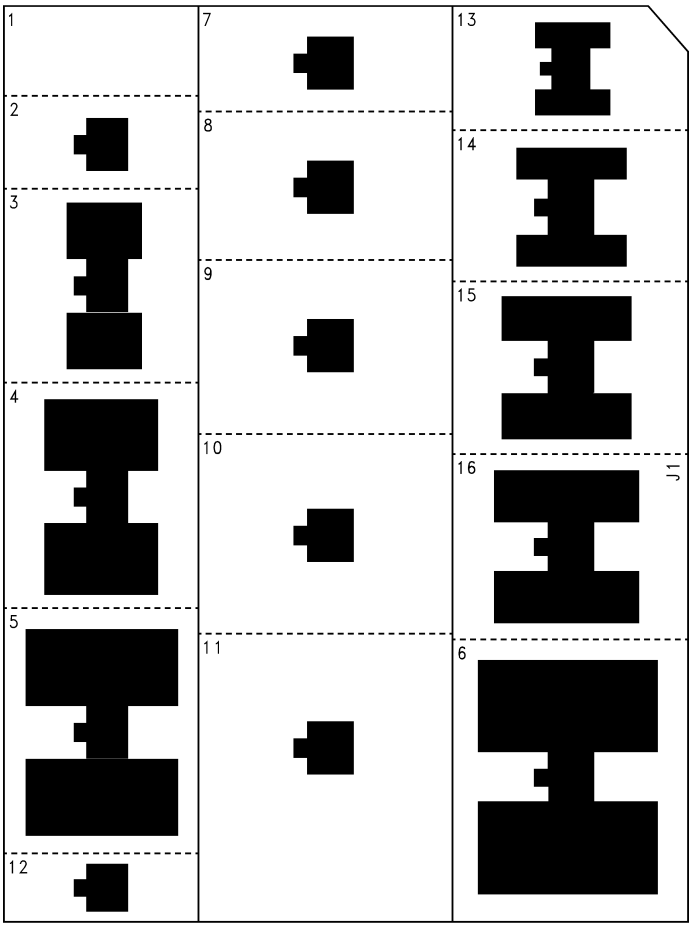

Figure 36. Top View of the Thermal Test Pattern in Actual Scale

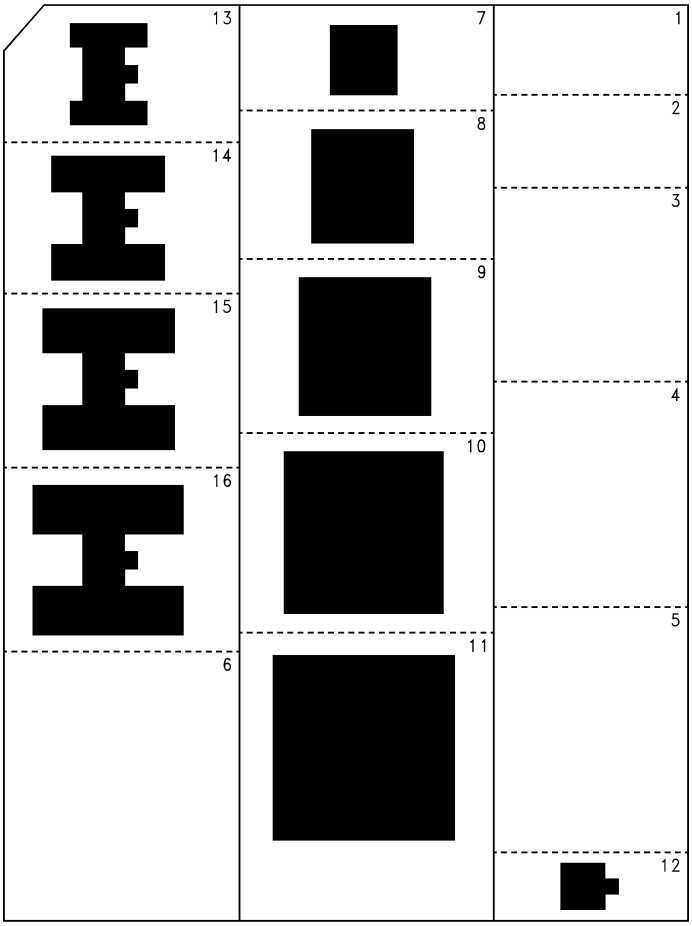

Figure 37. Bottom View of the Thermal Test Pattern in Actual Scale

Schematic Diagram

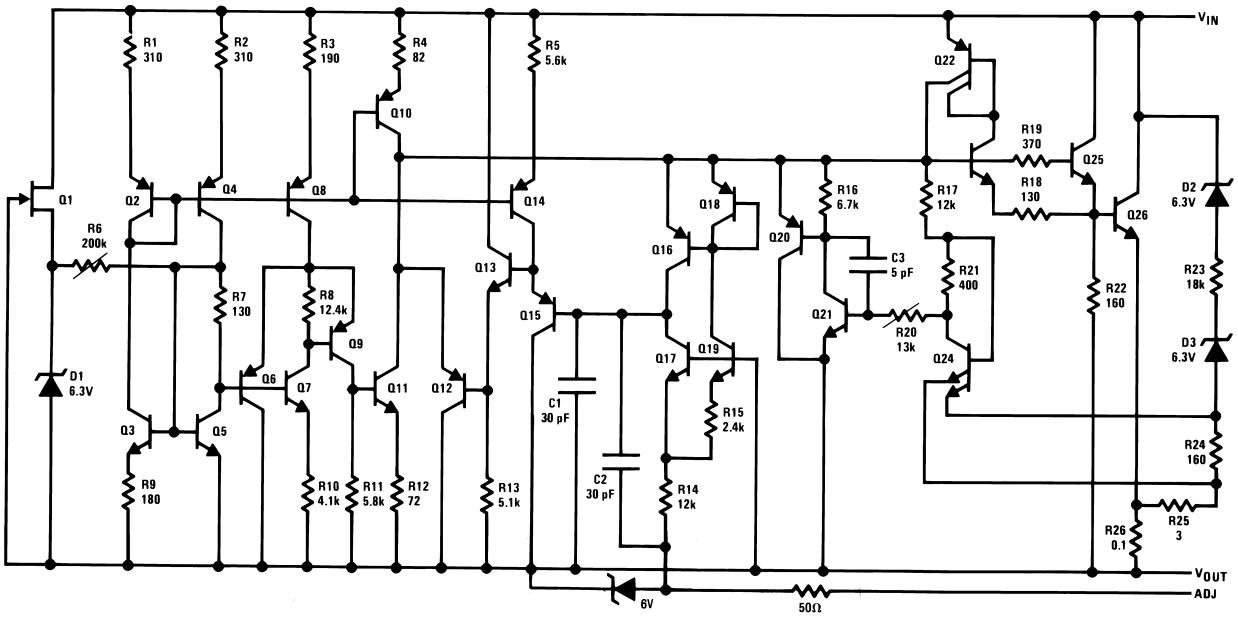

Copyright © 2004–2011, Texas Instruments Incorporated

Typical Applications

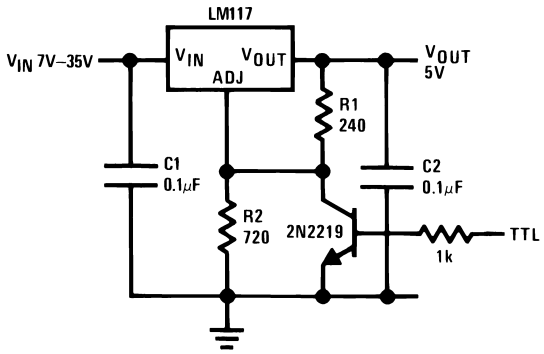

Note: Min. output ≅ 1.2V

Figure 38. 5V Logic Regulator with Electronic Shutdown

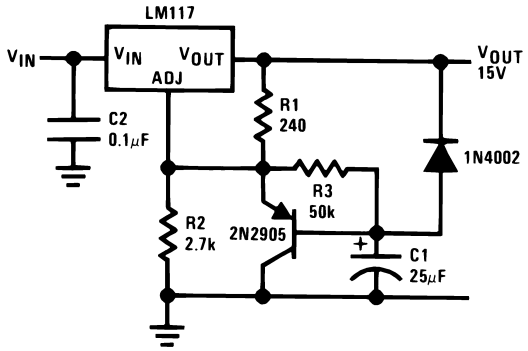

Figure 39. Slow Turn-On 15V Regulator

Figure 40.

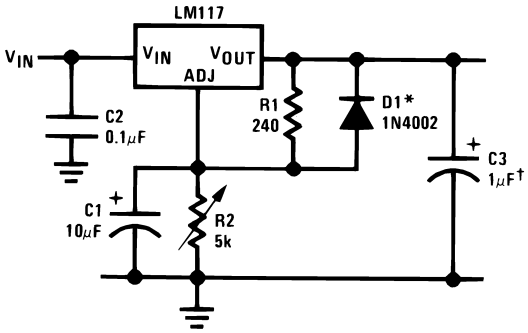

†Solid tantalum
*Discharges C1 if output is shorted to ground

Figure 41. Adjustable Regulator with Improved Ripple Rejection

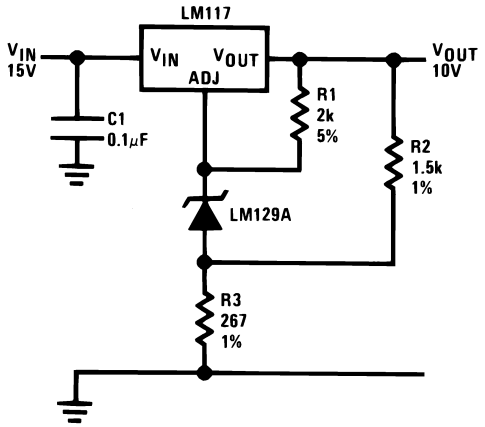

Figure 42. High Stability 10V Regulator

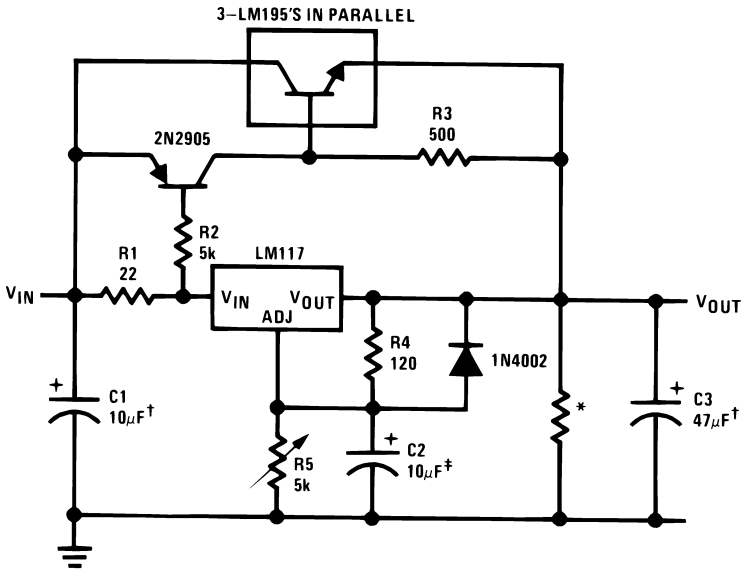

‡Optional—improves ripple rejection
†Solid tantalum
*Minimum load current = 30 mA

Figure 43. High Current Adjustable Regulator

Copyright © 2004–2011, Texas Instruments Incorporated

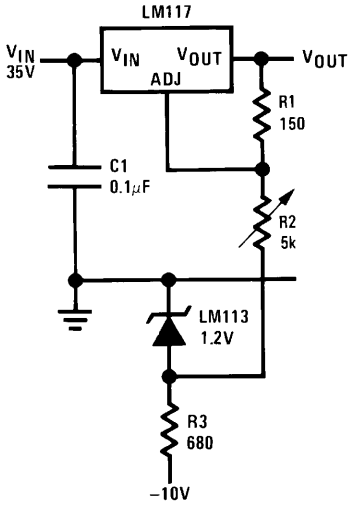

Full output current not available at high input-output voltages

Figure 44. 0 to 30V Regulator

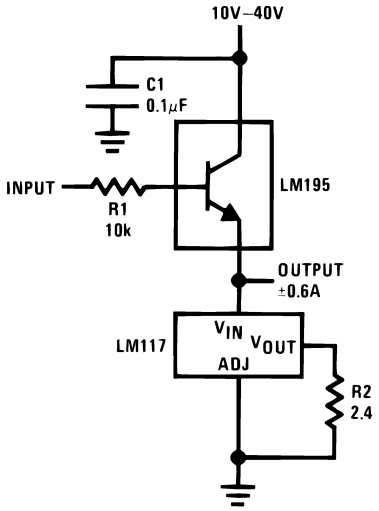

Figure 45. Power Follower

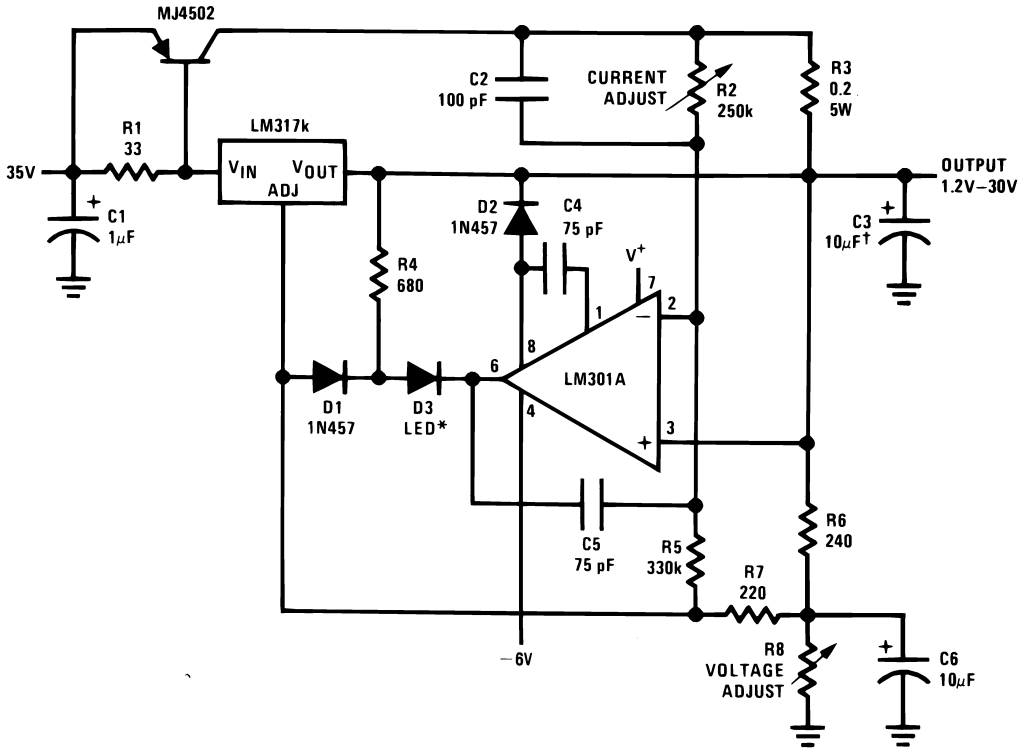

†Solid tantalum
*Lights in constant current mode

Figure 46. 5A Constant Voltage/Constant Current Regulator

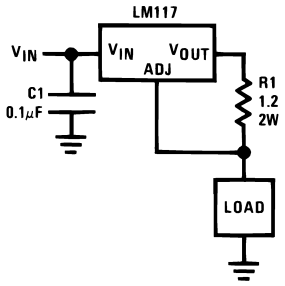

Figure 47. 1A Current Regulator

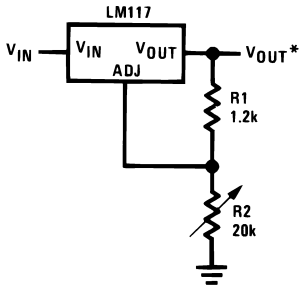

*Minimum load current ≅ 4 mA

Figure 48. 1.2V–20V Regulator with Minimum Program Current

Copyright © 2004–2011, Texas Instruments Incorporated

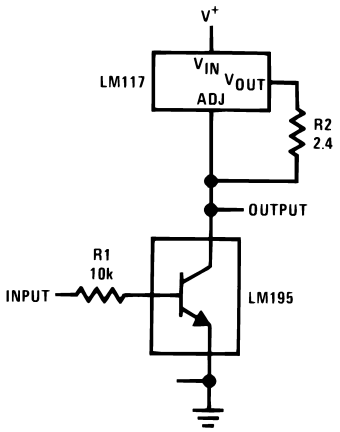

Figure 49. High Gain Amplifier

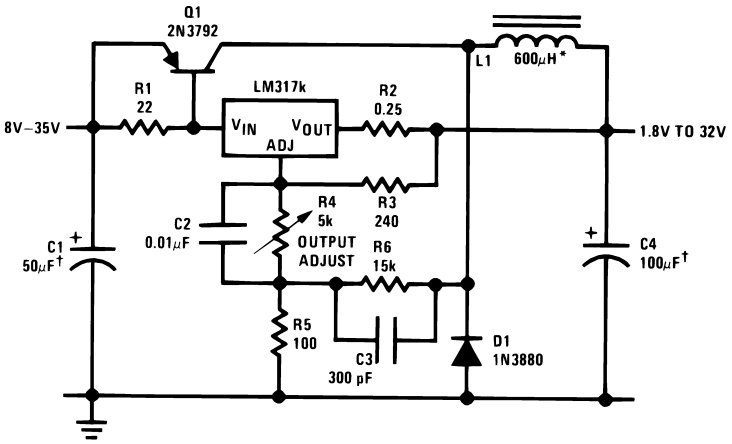

†Solid tantalum
*Core—Arnold A-254168-2 60 turns

Figure 50. Low Cost 3A Switching Regulator

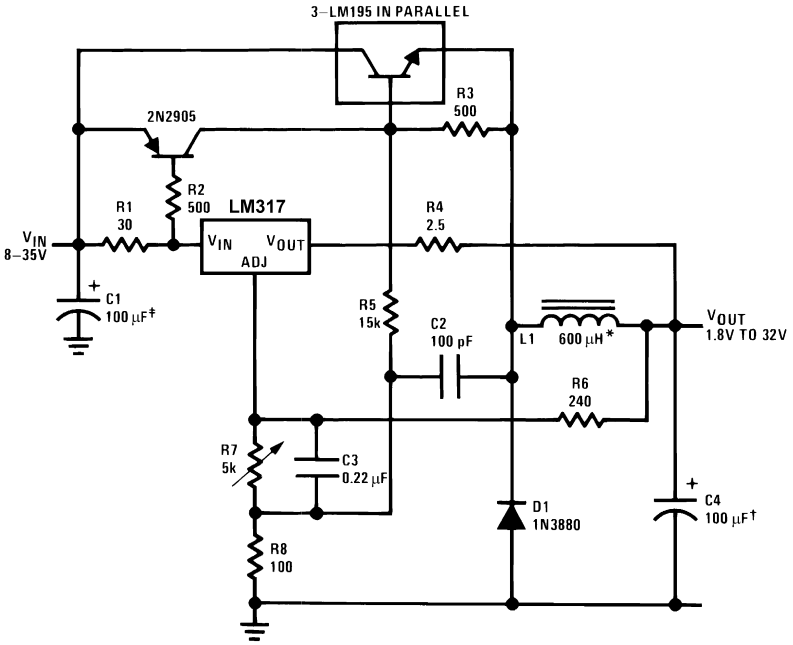

†Solid tantalum
*Core—Arnold A-254168-2 60 turns

Figure 51. 4A Switching Regulator with Overload Protection

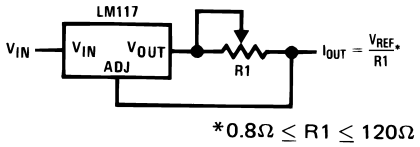

Figure 52. Precision Current Limiter

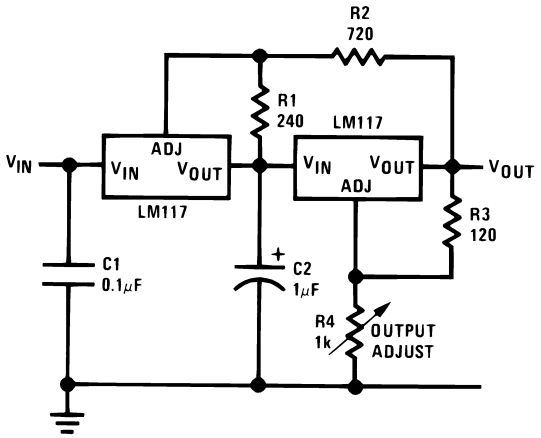

Figure 53. Tracking Preregulator

Copyright © 2004–2011, Texas Instruments Incorporated

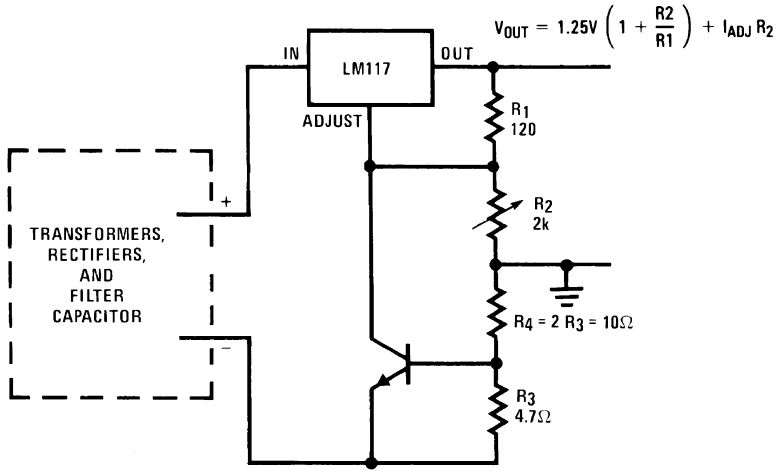

– Short circuit current is approximately $\frac{600\ mV}{R3}$, or 120 mA

(Compared to LM117's higher current limit)
—At 50 mA output only ¾ volt of drop occurs in R_3 and R_4

Figure 54. Current Limited Voltage Regulator

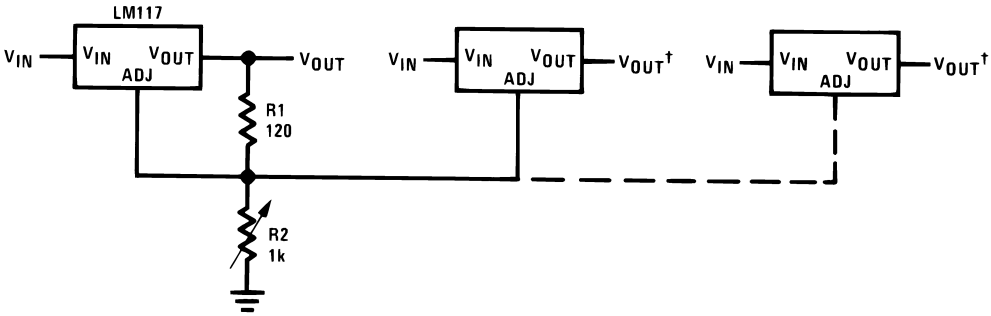

Note: All outputs within ±100 mV
†Minimum load—10 mA

Figure 55. Adjusting Multiple On-Card Regulators with Single Control

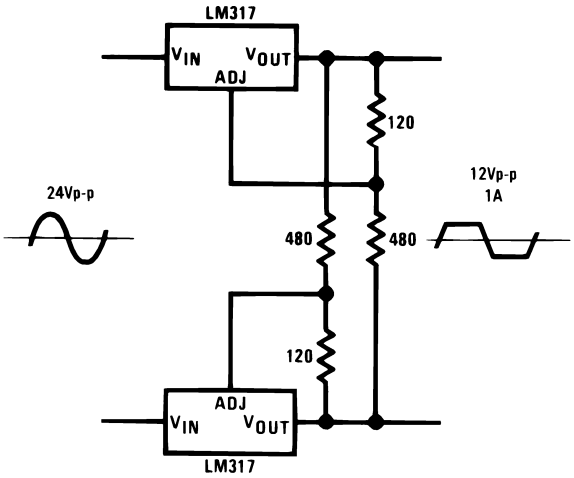

Figure 56. AC Voltage Regulator

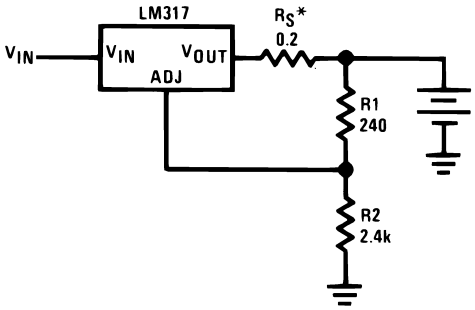

*R_S—sets output impedance of charger: $Z_{OUT} = R_S\left(1 + \frac{R2}{R1}\right)$

Use of R_S allows low charging rates with fully charged battery.

Figure 57. 12V Battery Charger

Figure 58.

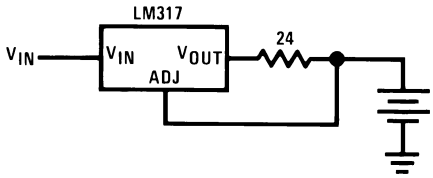

Figure 59. 50mA Constant Current Battery Charger

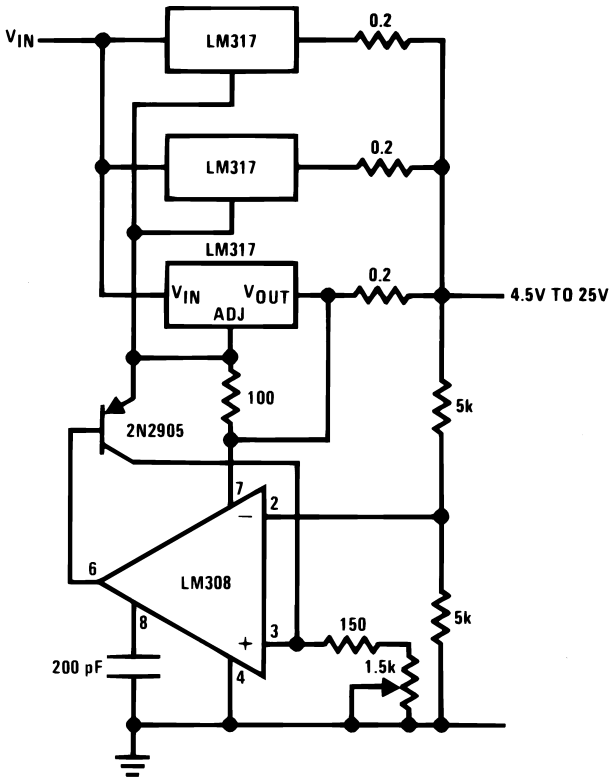

Figure 60. Adjustable 4A Regulator

Copyright © 2004–2011, Texas Instruments Incorporated

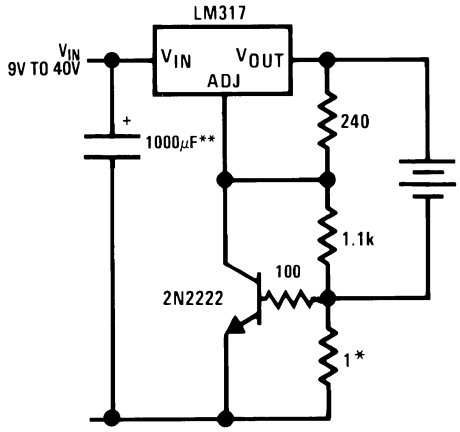

*Sets peak current (0.6A for 1Ω)
**The 1000μF is recommended to filter out input transients

Figure 61. Current Limited 6V Charger

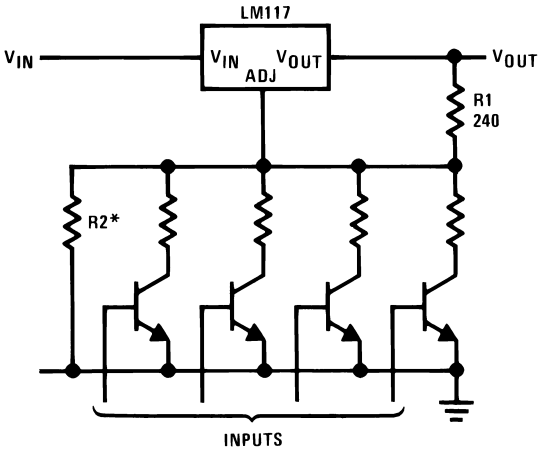

*Sets maximum V_{OUT}

Figure 62. Digitally Selected Outputs

PACKAGING INFORMATION

Orderable Device	Status (1)	Package Type	Package Drawing	Pins	Package Qty	Eco Plan (2)	Lead/Ball Finish	MSL Peak Temp (3)	Op Temp (°C)	Top-Side Markings (4)	Samples
LM117H	ACTIVE	TO	NDT	3	500	Green (RoHS & no Sb/Br)	POST-PLATE	Level-1-NA-UNLIM	-55 to 125	LM117HP+	Samples
LM117H/NOPB	ACTIVE	TO	NDT	3	500	Green (RoHS & no Sb/Br)	POST-PLATE	Level-1-NA-UNLIM	-55 to 125	LM117HP+	Samples
LM117K	ACTIVE	TO-3	NDS	2	50	TBD	Call TI	Call TI	-55 to 125	LM117K STEELP+	Samples
LM117K STEEL	ACTIVE	TO-3	NDS	2	50	TBD	Call TI	Call TI	-55 to 125	LM117K STEELP+	Samples
LM117K STEEL/NOPB	ACTIVE	TO-3	NDS	2	50	Green (RoHS & no Sb/Br)	POST-PLATE	Level-1-NA-UNLIM	-55 to 125	LM117K STEELP+	Samples
LM317AEMP	ACTIVE	SOT-223	DCY	4	1000	TBD	Call TI	Call TI	-40 to 125	N07A	Samples
LM317AEMP/NOPB	ACTIVE	SOT-223	DCY	4	1000	Green (RoHS & no Sb/Br)	CU SN	Level-1-260C-UNLIM	-40 to 125	N07A	Samples
LM317AEMPX	ACTIVE	SOT-223	DCY	4	2000	TBD	Call TI	Call TI		N07A	Samples
LM317AEMPX/NOPB	ACTIVE	SOT-223	DCY	4	2000	Green (RoHS & no Sb/Br)	CU SN	Level-1-260C-UNLIM	-40 to 125	N07A	Samples
LM317AH	ACTIVE	TO	NDT	3	500	Green (RoHS & no Sb/Br)	POST-PLATE	Level-1-NA-UNLIM	-40 to 125	LM317AHP+	Samples
LM317AH/NOPB	ACTIVE	TO	NDT	3	500	Green (RoHS & no Sb/Br)	POST-PLATE	Level-1-NA-UNLIM	-40 to 125	LM317AHP+	Samples
LM317AMDT	ACTIVE	PFM	NDP	3	75	TBD	Call TI	Call TI	-40 to 125	LM317 AMDT	Samples
LM317AMDT/NOPB	ACTIVE	PFM	NDP	3	75	Green (RoHS & no Sb/Br)	CU SN	Level-2-260C-1 YEAR	-40 to 125	LM317 AMDT	Samples
LM317AMDTX	ACTIVE	PFM	NDP	3	2500	TBD	Call TI	Call TI	-40 to 125	LM317 AMDT	Samples
LM317AMDTX/NOPB	ACTIVE	PFM	NDP	3	2500	Green (RoHS & no Sb/Br)	CU SN	Level-2-260C-1 YEAR	-40 to 125	LM317 AMDT	Samples
LM317AT	ACTIVE	TO-220	NDE	3	45	TBD	Call TI	Call TI	-40 to 125	LM317AT P+	Samples
LM317AT/NOPB	ACTIVE	TO-220	NDE	3	45	Pb-Free (RoHS Exempt)	CU SN	Level-1-NA-UNLIM	-40 to 125	LM317AT P+	Samples
LM317EMP	ACTIVE	SOT-223	DCY	4	1000	TBD	Call TI	Call TI	0 to 125	N01A	Samples

Orderable Device	Status (1)	Package Type	Package Drawing	Pins	Package Qty	Eco Plan (2)	Lead/Ball Finish	MSL Peak Temp (3)	Op Temp (°C)	Top-Side Markings (4)	Samples
LM317EMP/NOPB	ACTIVE	SOT-223	DCY	4	1000	Green (RoHS & no Sb/Br)	CU SN	Level-1-260C-UNLIM	0 to 125	N01A	Samples
LM317EMPX/NOPB	ACTIVE	SOT-223	DCY	4	2000	Green (RoHS & no Sb/Br)	CU SN	Level-1-260C-UNLIM	0 to 125	N01A	Samples
LM317H	ACTIVE	TO	NDT	3	500	Green (RoHS & no Sb/Br)	POST-PLATE	Level-1-NA-UNLIM	0 to 125	LM317HP+	Samples
LM317H/NOPB	ACTIVE	TO	NDT	3	500	Green (RoHS & no Sb/Br)	POST-PLATE	Level-1-NA-UNLIM	0 to 125	LM317HP+	Samples
LM317K STEEL	ACTIVE	TO-3	NDS	2	50	TBD	Call TI	Call TI	0 to 125	LM317K STEELP+	Samples
LM317K STEEL/NOPB	ACTIVE	TO-3	NDS	2	50	Green (RoHS & no Sb/Br)	POST-PLATE	Level-1-NA-UNLIM	0 to 125	LM317K STEELP+	Samples
LM317MDT/NOPB	ACTIVE	PFM	NDP	3	75	Green (RoHS & no Sb/Br)	CU SN	Level-2-260C-1 YEAR	0 to 125	LM317 MDT	Samples
LM317MDTX/NOPB	ACTIVE	PFM	NDP	3	2500	Green (RoHS & no Sb/Br)	CU SN	Level-2-260C-1 YEAR	0 to 125	LM317 MDT	Samples
LM317S/NOPB	ACTIVE	DDPAK/ TO-263	KTT	3	45	Pb-Free (RoHS Exempt)	CU SN	Level-3-245C-168 HR	0 to 125	LM317S P+	Samples
LM317SX/NOPB	ACTIVE	DDPAK/ TO-263	KTT	3	500	Pb-Free (RoHS Exempt)	CU SN	Level-3-245C-168 HR	0 to 125	LM317S P+	Samples
LM317T	ACTIVE	TO-220	NDE	3	45	TBD	Call TI	Call TI		LM317T P+	Samples
LM317T/LF01	ACTIVE	TO-220	NDG	3	45	Pb-Free (RoHS Exempt)	CU SN	Level-4-260C-72 HR		LM317T P+	Samples
LM317T/NOPB	ACTIVE	TO-220	NDE	3	45	Green (RoHS & no Sb/Br)	CU SN	Level-1-NA-UNLIM	0 to 125	LM317T P+	Samples

(1) The marketing status values are defined as follows:
ACTIVE: Product device recommended for new designs.
LIFEBUY: TI has announced that the device will be discontinued, and a lifetime-buy period is in effect.
NRND: Not recommended for new designs. Device is in production to support existing customers, but TI does not recommend using this part in a new design.
PREVIEW: Device has been announced but is not in production. Samples may or may not be available.
OBSOLETE: TI has discontinued the production of the device.

(2) Eco Plan - The planned eco-friendly classification: Pb-Free (RoHS), Pb-Free (RoHS Exempt), or Green (RoHS & no Sb/Br) - please check http://www.ti.com/productcontent for the latest availability information and additional product content details.
TBD: The Pb-Free/Green conversion plan has not been defined.

Pb-Free (RoHS): TI's terms "Lead-Free" or "Pb-Free" mean semiconductor products that are compatible with the current RoHS requirements for all 6 substances, including the requirement that lead not exceed 0.1% by weight in homogeneous materials. Where designed to be soldered at high temperatures, TI Pb-Free products are suitable for use in specified lead-free processes.
Pb-Free (RoHS Exempt): This component has a RoHS exemption for either 1) lead-based flip-chip solder bumps used between the die and package, or 2) lead-based die adhesive used between the die and leadframe. The component is otherwise considered Pb-Free (RoHS compatible) as defined above.
Green (RoHS & no Sb/Br): TI defines "Green" to mean Pb-Free (RoHS compatible), and free of Bromine (Br) and Antimony (Sb) based flame retardants (Br or Sb do not exceed 0.1% by weight in homogeneous material)

(3) MSL, Peak Temp. -- The Moisture Sensitivity Level rating according to the JEDEC industry standard classifications, and peak solder temperature.

(4) Only one of markings shown within the brackets will appear on the physical device.

Important Information and Disclaimer: The information provided on this page represents TI's knowledge and belief as of the date that it is provided. TI bases its knowledge and belief on information provided by third parties, and makes no representation or warranty as to the accuracy of such information. Efforts are underway to better integrate information from third parties. TI has taken and continues to take reasonable steps to provide representative and accurate information but may not have conducted destructive testing or chemical analysis on incoming materials and chemicals. TI and TI suppliers consider certain information to be proprietary, and thus CAS numbers and other limited information may not be available for release.

In no event shall TI's liability arising out of such information exceed the total purchase price of the TI part(s) at issue in this document sold by TI to Customer on an annual basis.

TAPE AND REEL INFORMATION

REEL DIMENSIONS

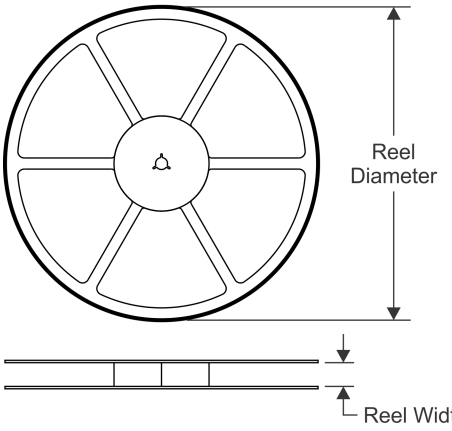

TAPE DIMENSIONS

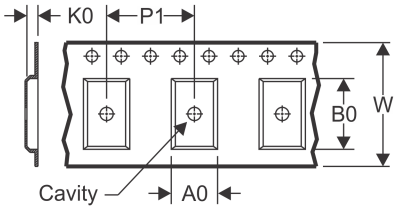

A0	Dimension designed to accommodate the component width
B0	Dimension designed to accommodate the component length
K0	Dimension designed to accommodate the component thickness
W	Overall width of the carrier tape
P1	Pitch between successive cavity centers

QUADRANT ASSIGNMENTS FOR PIN 1 ORIENTATION IN TAPE

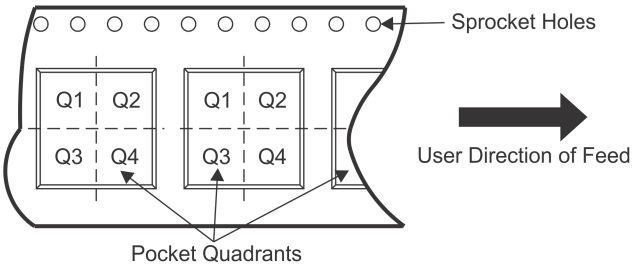

*All dimensions are nominal

Device	Package Type	Package Drawing	Pins	SPQ	Reel Diameter (mm)	Reel Width W1 (mm)	A0 (mm)	B0 (mm)	K0 (mm)	P1 (mm)	W (mm)	Pin1 Quadrant
LM317AEMP	SOT-223	DCY	4	1000	330.0	16.4	7.0	7.5	2.2	12.0	16.0	Q3
LM317AEMP/NOPB	SOT-223	DCY	4	1000	330.0	16.4	7.0	7.5	2.2	12.0	16.0	Q3
LM317AEMPX	SOT-223	DCY	4	2000	330.0	16.4	7.0	7.5	2.2	12.0	16.0	Q3
LM317AEMPX/NOPB	SOT-223	DCY	4	2000	330.0	16.4	7.0	7.5	2.2	12.0	16.0	Q3
LM317AMDTX	PFM	NDP	3	2500	330.0	16.4	6.9	10.5	2.7	8.0	16.0	Q2
LM317AMDTX/NOPB	PFM	NDP	3	2500	330.0	16.4	6.9	10.5	2.7	8.0	16.0	Q2
LM317EMP	SOT-223	DCY	4	1000	330.0	16.4	7.0	7.5	2.2	12.0	16.0	Q3
LM317EMP/NOPB	SOT-223	DCY	4	1000	330.0	16.4	7.0	7.5	2.2	12.0	16.0	Q3
LM317EMPX/NOPB	SOT-223	DCY	4	2000	330.0	16.4	7.0	7.5	2.2	12.0	16.0	Q3
LM317MDTX/NOPB	PFM	NDP	3	2500	330.0	16.4	6.9	10.5	2.7	8.0	16.0	Q2
LM317SX/NOPB	DDPAK/ TO-263	KTT	3	500	330.0	24.4	10.75	14.85	5.0	16.0	24.0	Q2

TAPE AND REEL BOX DIMENSIONS

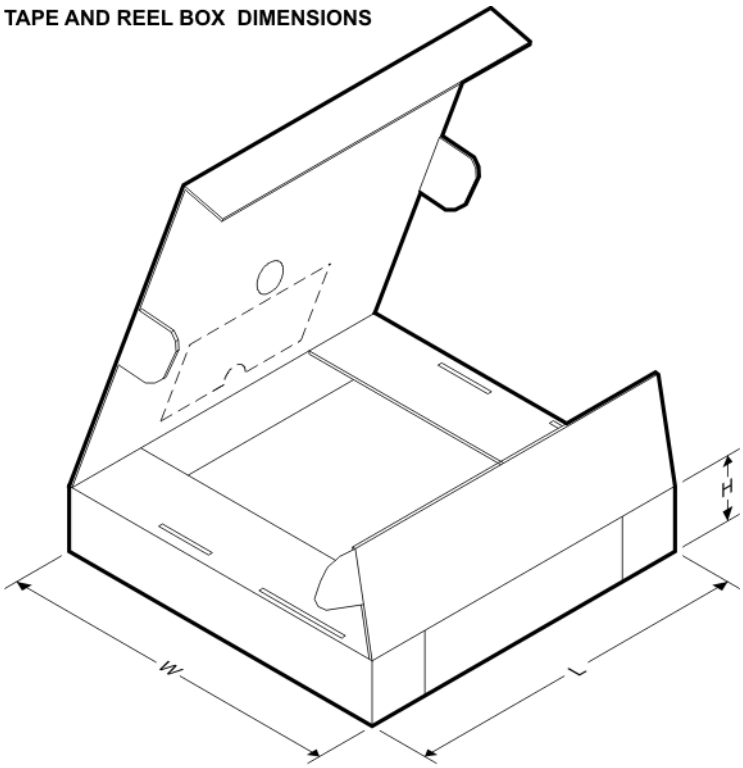

*All dimensions are nominal

Device	Package Type	Package Drawing	Pins	SPQ	Length (mm)	Width (mm)	Height (mm)
LM317AEMP	SOT-223	DCY	4	1000	349.0	337.0	45.0
LM317AEMP/NOPB	SOT-223	DCY	4	1000	349.0	337.0	45.0
LM317AEMPX	SOT-223	DCY	4	2000	354.0	340.0	35.0
LM317AEMPX/NOPB	SOT-223	DCY	4	2000	354.0	340.0	35.0
LM317AMDTX	PFM	NDP	3	2500	354.0	340.0	35.0
LM317AMDTX/NOPB	PFM	NDP	3	2500	367.0	367.0	38.0
LM317EMP	SOT-223	DCY	4	1000	349.0	337.0	45.0
LM317EMP/NOPB	SOT-223	DCY	4	1000	349.0	337.0	45.0
LM317EMPX/NOPB	SOT-223	DCY	4	2000	354.0	340.0	35.0
LM317MDTX/NOPB	PFM	NDP	3	2500	367.0	367.0	38.0
LM317SX/NOPB	DDPAK/TO-263	KTT	3	500	367.0	367.0	45.0

NDT0003A

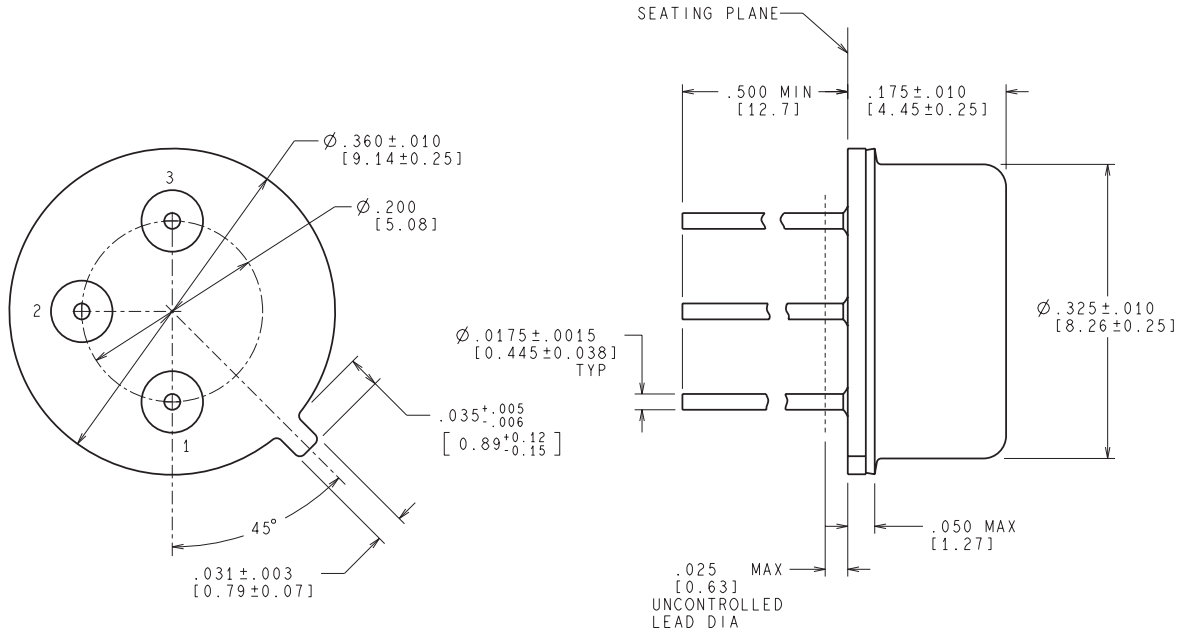

CONTROLLING DIMENSION IS INCH
VALUES IN [ ] ARE MILLIMETERS

MIL-PRF-38535
CONFIGURATION CONTROL

H03A (Rev D)

NDS0002A

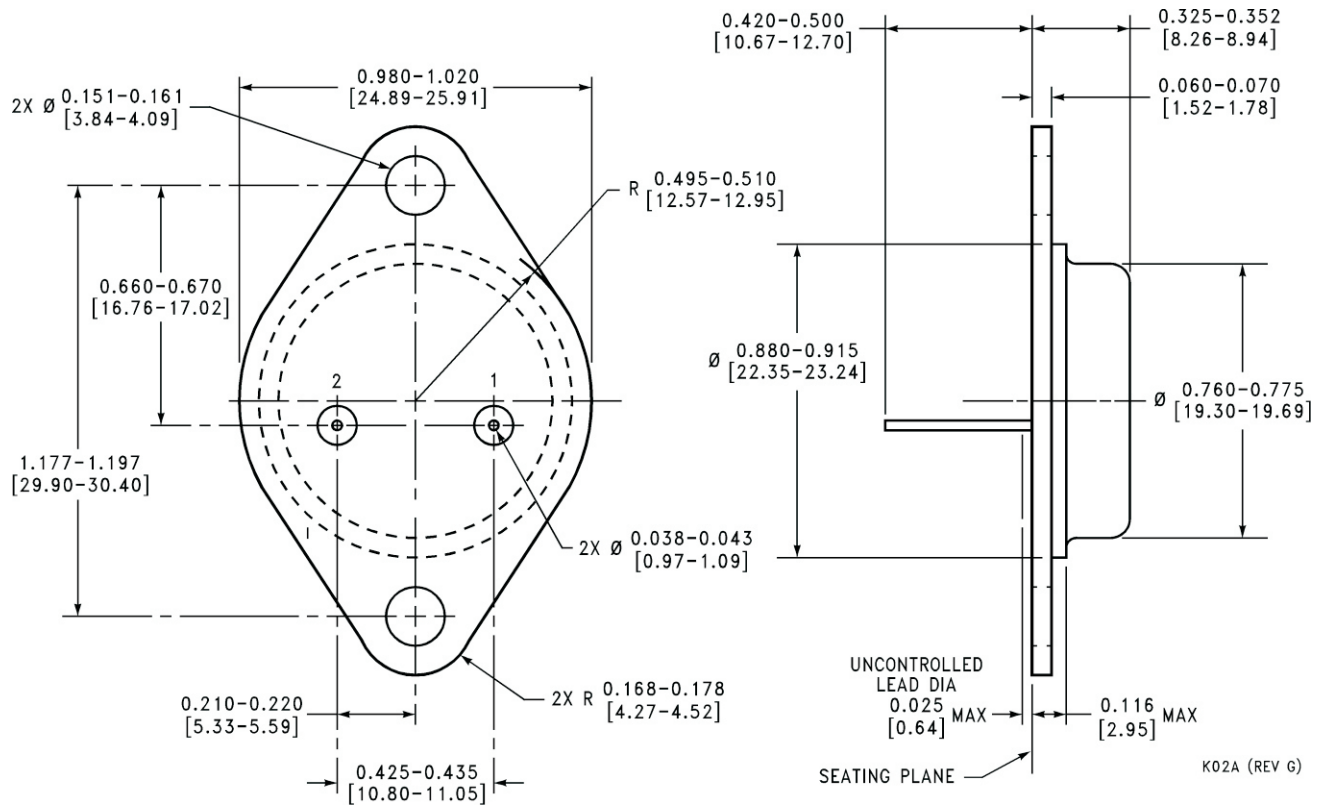
0.420-0.500
[10.67-12.70]
0.325-0.352
[8.26-8.94]
0.060-0.070
[1.52-1.78]
2X Ø 0.151-0.161
[3.84-4.09]
0.980-1.020
[24.89-25.91]
R 0.495-0.510
[12.57-12.95]
0.660-0.670
[16.76-17.02]
Ø 0.880-0.915
[22.35-23.24]
Ø 0.760-0.775
[19.30-19.69]
2
1
1.177-1.197
[29.90-30.40]
2X Ø 0.038-0.043
[0.97-1.09]
UNCONTROLLED
LEAD DIA
0.025
[0.64] MAX
0.116
[2.95] MAX
2X R 0.168-0.178
[4.27-4.52]
0.210-0.220
[5.33-5.59]
0.425-0.435
[10.80-11.05]
SEATING PLANE
K02A (REV G)

NDE0003B

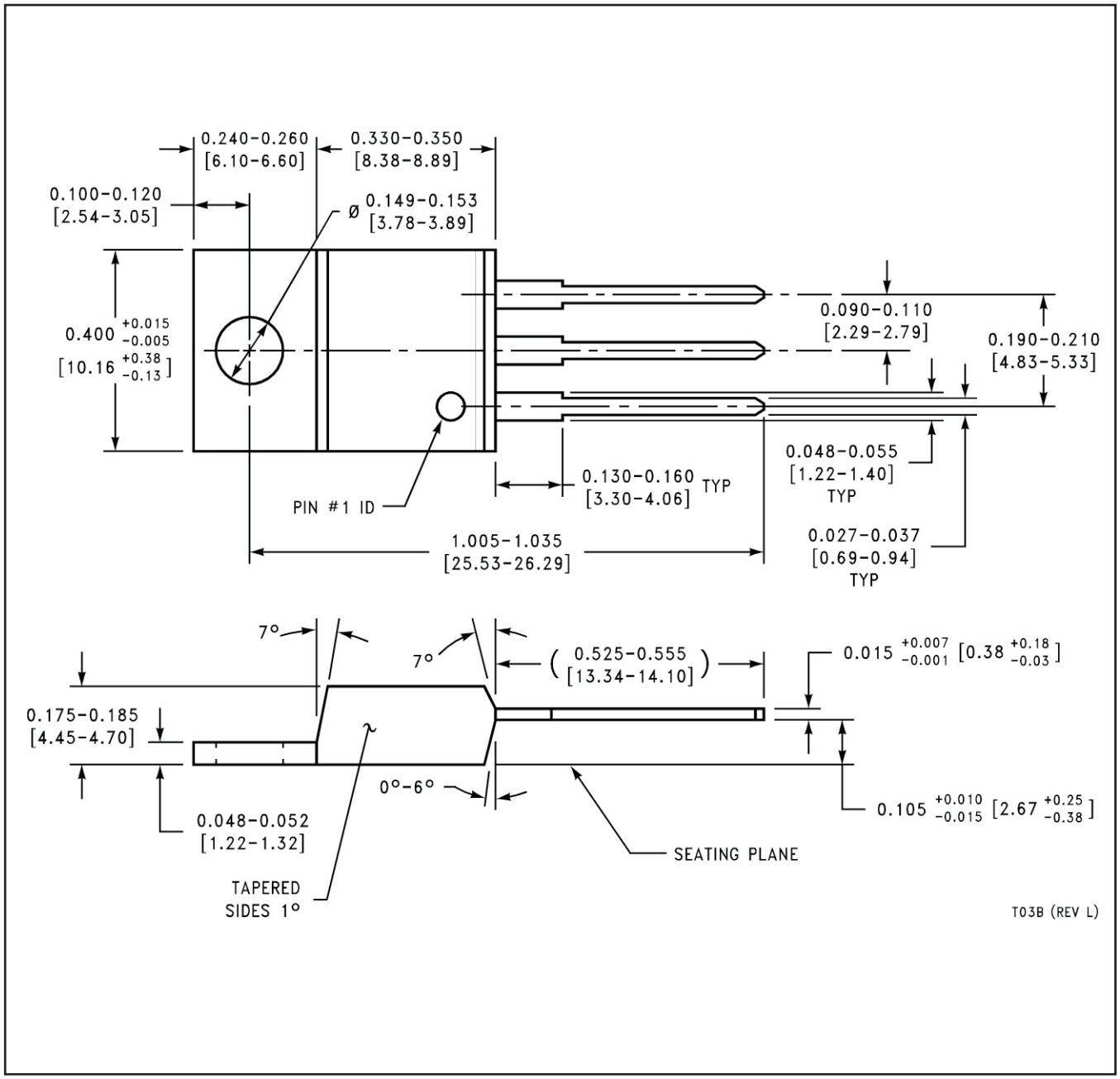
0.240-0.260
[6.10-6.60]
0.330-0.350
[8.38-8.89]
0.100-0.120
[2.54-3.05]
Ø 0.149-0.153
[3.78-3.89]
0.400 +0.015 -0.005
[10.16 +0.38 -0.13]
0.090-0.110
[2.29-2.79]
0.190-0.210
[4.83-5.33]
0.048-0.055
[1.22-1.40]
TYP
0.130-0.160 TYP
[3.30-4.06]
PIN #1 ID
1.005-1.035
[25.53-26.29]
0.027-0.037
[0.69-0.94]
TYP
7°
7°
(0.525-0.555)
[13.34-14.10]
0.015 +0.007 -0.001 [0.38 +0.18 -0.03]
0.175-0.185
[4.45-4.70]
0°-6°
0.105 +0.010 -0.015 [2.67 +0.25 -0.38]
0.048-0.052
[1.22-1.32]
SEATING PLANE
TAPERED
SIDES 1°
T03B (REV L)

NDG0003F

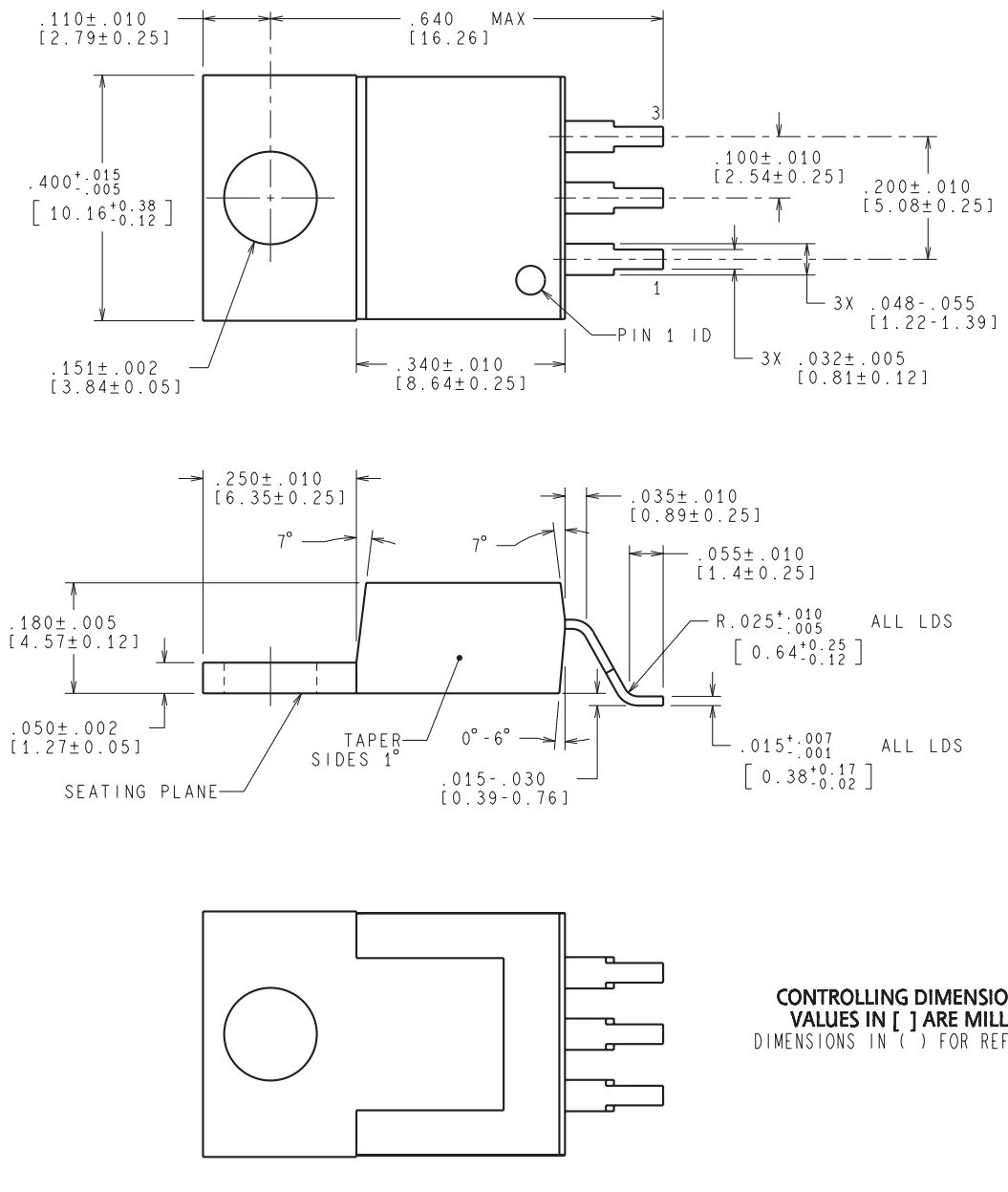

CONTROLLING DIMENSION IS INCH
VALUES IN [ ] ARE MILLIMETERS
DIMENSIONS IN ( ) FOR REFERENCE ONLY

T03F (Rev B)

NDP0003B

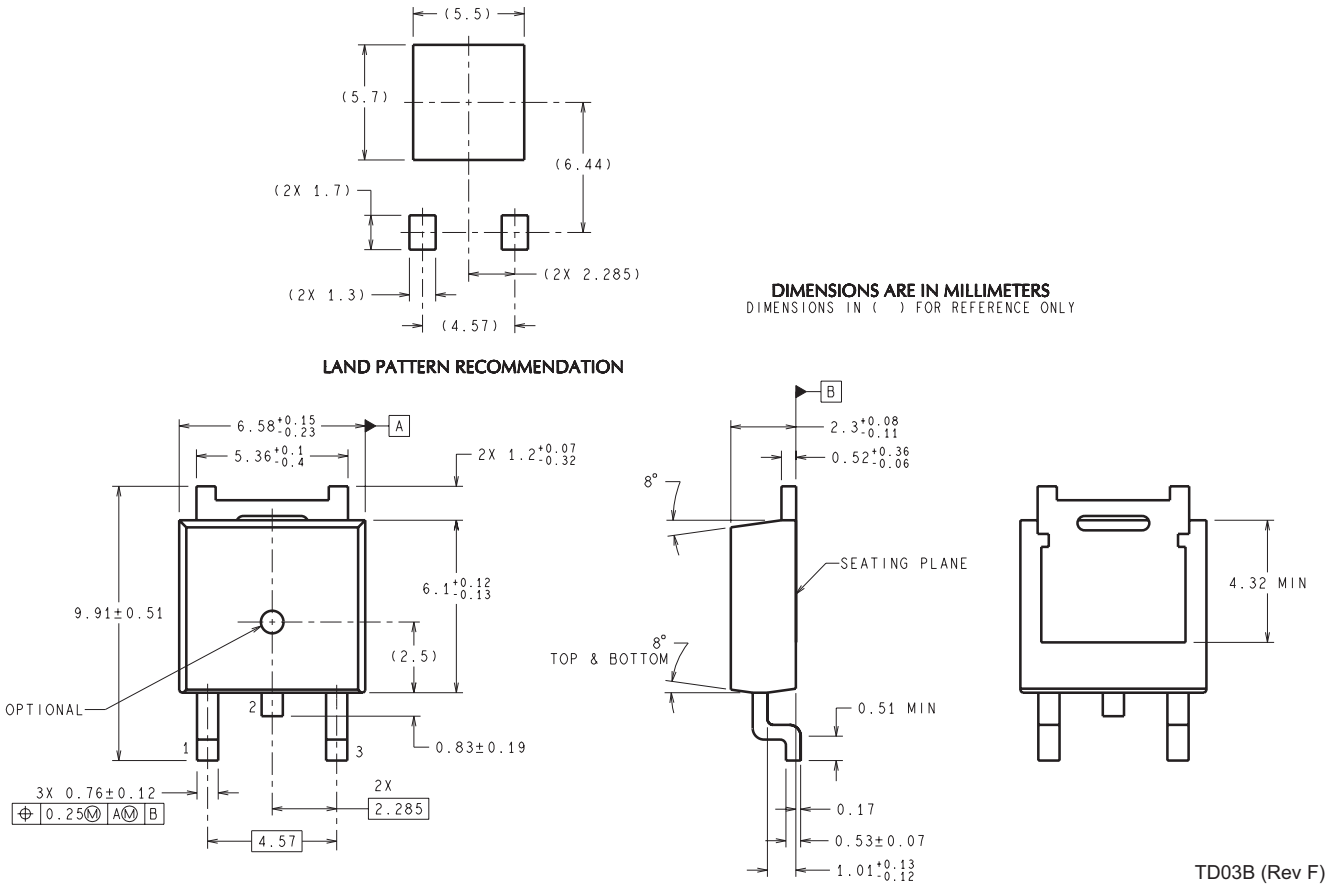
(5.5)
(5.7)
(6.44)
(2X 1.7)
(2X 2.285)
(2X 1.3)
(4.57)
LAND PATTERN RECOMMENDATION
DIMENSIONS ARE IN MILLIMETERS
DIMENSIONS IN ( ) FOR REFERENCE ONLY
6.58 +0.15 -0.23
A
5.36 +0.1 -0.4
2X 1.2 +0.07 -0.32
9.91±0.51
6.1 +0.12 -0.13
(2.5)
OPTIONAL
0.83±0.19
3X 0.76±0.12
0.25 M A M B
2X
2.285
4.57
B
2.3 +0.08 -0.11
0.52 +0.36 -0.06
8°
SEATING PLANE
TOP & BOTTOM
0.51 MIN
0.17
0.53±0.07
1.01 +0.13 -0.12
4.32 MIN
TD03B (Rev F)

DCY (R-PDSO-G4) **PLASTIC SMALL-OUTLINE**

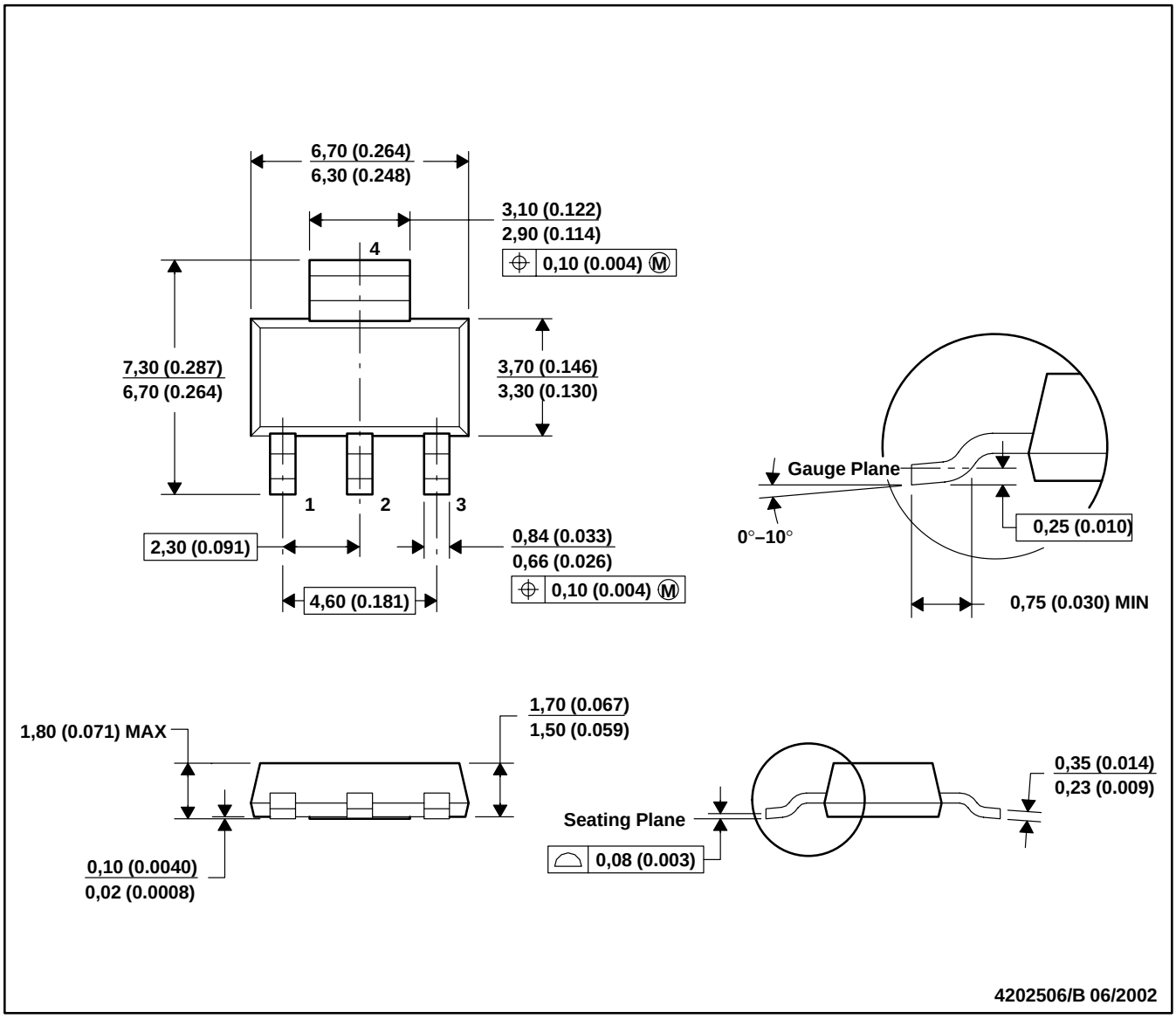

NOTES: A. All linear dimensions are in millimeters (inches).
B. This drawing is subject to change without notice.
C. Body dimensions do not include mold flash or protrusion.
D. Falls within JEDEC TO-261 Variation AA.

KTT0003B

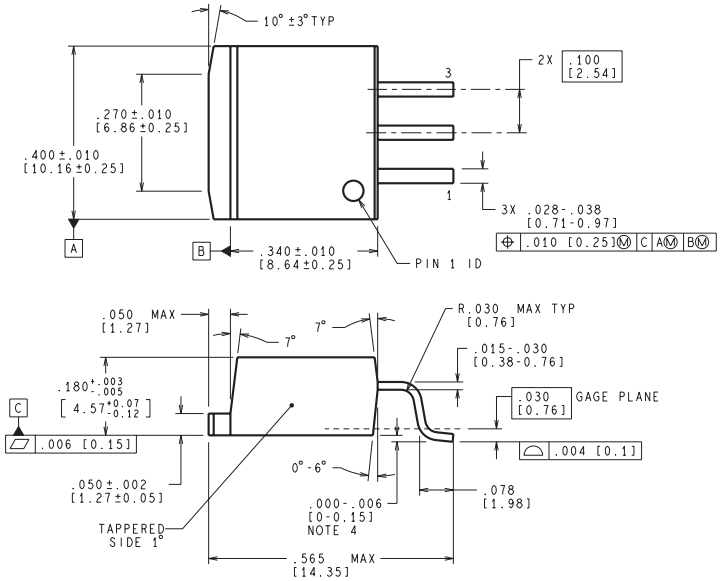

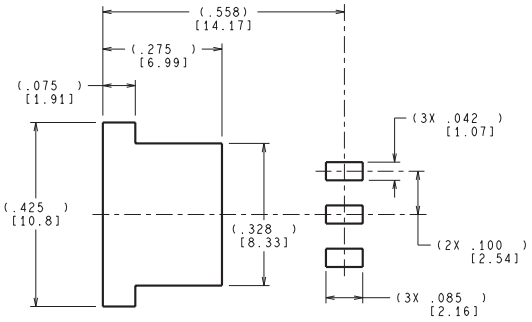

LAND PATTERN RECOMMENDATION

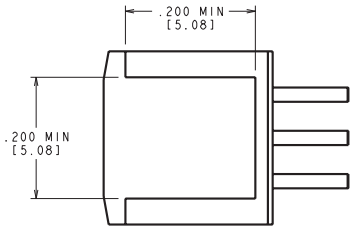

BOTTOM SIDE OF PACKAGE

CONTROLLING DIMENSION IS INCH
VALUES IN [ ] ARE MILLIMETERS
DIMENSIONS IN ( ) FOR REFERENCE ONLY

TS3B (Rev F)

IMPORTANT NOTICE

Texas Instruments Incorporated and its subsidiaries (TI) reserve the right to make corrections, enhancements, improvements and other changes to its semiconductor products and services per JESD46, latest issue, and to discontinue any product or service per JESD48, latest issue. Buyers should obtain the latest relevant information before placing orders and should verify that such information is current and complete. All semiconductor products (also referred to herein as “components”) are sold subject to TI’s terms and conditions of sale supplied at the time of order acknowledgment.

TI warrants performance of its components to the specifications applicable at the time of sale, in accordance with the warranty in TI’s terms and conditions of sale of semiconductor products. Testing and other quality control techniques are used to the extent TI deems necessary to support this warranty. Except where mandated by applicable law, testing of all parameters of each component is not necessarily performed.

TI assumes no liability for applications assistance or the design of Buyers’ products. Buyers are responsible for their products and applications using TI components. To minimize the risks associated with Buyers’ products and applications, Buyers should provide adequate design and operating safeguards.

TI does not warrant or represent that any license, either express or implied, is granted under any patent right, copyright, mask work right, or other intellectual property right relating to any combination, machine, or process in which TI components or services are used. Information published by TI regarding third-party products or services does not constitute a license to use such products or services or a warranty or endorsement thereof. Use of such information may require a license from a third party under the patents or other intellectual property of the third party, or a license from TI under the patents or other intellectual property of TI.

Reproduction of significant portions of TI information in TI data books or data sheets is permissible only if reproduction is without alteration and is accompanied by all associated warranties, conditions, limitations, and notices. TI is not responsible or liable for such altered documentation. Information of third parties may be subject to additional restrictions.

Resale of TI components or services with statements different from or beyond the parameters stated by TI for that component or service voids all express and any implied warranties for the associated TI component or service and is an unfair and deceptive business practice. TI is not responsible or liable for any such statements.

Buyer acknowledges and agrees that it is solely responsible for compliance with all legal, regulatory and safety-related requirements concerning its products, and any use of TI components in its applications, notwithstanding any applications-related information or support that may be provided by TI. Buyer represents and agrees that it has all the necessary expertise to create and implement safeguards which anticipate dangerous consequences of failures, monitor failures and their consequences, lessen the likelihood of failures that might cause harm and take appropriate remedial actions. Buyer will fully indemnify TI and its representatives against any damages arising out of the use of any TI components in safety-critical applications.

In some cases, TI components may be promoted specifically to facilitate safety-related applications. With such components, TI’s goal is to help enable customers to design and create their own end-product solutions that meet applicable functional safety standards and requirements. Nonetheless, such components are subject to these terms.

No TI components are authorized for use in FDA Class III (or similar life-critical medical equipment) unless authorized officers of the parties have executed a special agreement specifically governing such use.

Only those TI components which TI has specifically designated as military grade or “enhanced plastic” are designed and intended for use in military/aerospace applications or environments. Buyer acknowledges and agrees that any military or aerospace use of TI components which have ***not*** been so designated is solely at the Buyer's risk, and that Buyer is solely responsible for compliance with all legal and regulatory requirements in connection with such use.

TI has specifically designated certain components as meeting ISO/TS16949 requirements, mainly for automotive use. In any case of use of non-designated products, TI will not be responsible for any failure to meet ISO/TS16949.

Products		**Applications**	
Audio	www.ti.com/audio	Automotive and Transportation	www.ti.com/automotive
Amplifiers	amplifier.ti.com	Communications and Telecom	www.ti.com/communications
Data Converters	dataconverter.ti.com	Computers and Peripherals	www.ti.com/computers
DLP® Products	www.dlp.com	Consumer Electronics	www.ti.com/consumer-apps
DSP	dsp.ti.com	Energy and Lighting	www.ti.com/energy
Clocks and Timers	www.ti.com/clocks	Industrial	www.ti.com/industrial
Interface	interface.ti.com	Medical	www.ti.com/medical
Logic	logic.ti.com	Security	www.ti.com/security
Power Mgmt	power.ti.com	Space, Avionics and Defense	www.ti.com/space-avionics-defense
Microcontrollers	microcontroller.ti.com	Video and Imaging	www.ti.com/video
RFID	www.ti-rfid.com		
OMAP Applications Processors	www.ti.com/omap	**TI E2E Community**	e2e.ti.com
Wireless Connectivity	www.ti.com/wirelessconnectivity		

Mailing Address: Texas Instruments, Post Office Box 655303, Dallas, Texas 75265
Copyright © 2013, Texas Instruments Incorporated

FAIRCHILD SEMICONDUCTOR™

October 1987
Revised January 1999

MM74C922 • MM74C923
16-Key Encoder • 20-Key Encoder

General Description

The MM74C922 and MM74C923 CMOS key encoders provide all the necessary logic to fully encode an array of SPST switches. The keyboard scan can be implemented by either an external clock or external capacitor. These encoders also have on-chip pull-up devices which permit switches with up to 50 kΩ on resistance to be used. No diodes in the switch array are needed to eliminate ghost switches. The internal debounce circuit needs only a single external capacitor and can be defeated by omitting the capacitor. A Data Available output goes to a high level when a valid keyboard entry has been made. The Data Available output returns to a low level when the entered key is released, even if another key is depressed. The Data Available will return high to indicate acceptance of the new key after a normal debounce period; this two-key roll-over is provided between any two switches.

An internal register remembers the last key pressed even after the key is released. The 3-STATE outputs provide for easy expansion and bus operation and are LPTTL compatible.

Features

- 50 kΩ maximum switch on resistance
- On or off chip clock
- On-chip row pull-up devices
- 2 key roll-over
- Keybounce elimination with single capacitor
- Last key register at outputs
- 3-STATE output LPTTL compatible
- Wide supply range: 3V to 15V
- Low power consumption

Ordering Code:

Order Number	Package Number	Package Description
MM74C922N	N18A	18-Lead Plastic Dual-In-Line Package (PDIP), JEDEC MS-001, 0.300” Wide
MM74C922WM	M20B	20-Lead Small Outline Integrated Circuit (SOIC), JEDEC MS-013, 0.300” Wide
MM74C923WM	M20B	20-Lead Small Outline Integrated Circuit (SOIC), JEDEC MS-013, 0.300” Wide
MM74C923N	N20A	20-Lead Plastic Dual-In-Line Package (PDIP), JEDEC MS-001, 0.300” Wide

Device also available in Tape and Reel. Specify by appending suffix letter “X” to the ordering code.

Connection Diagrams

Pin Assignment for DIP

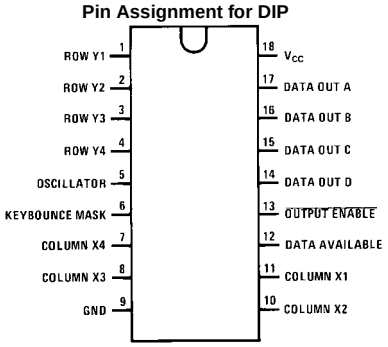

Top View
MM94C922

Pin Assignment for SOIC

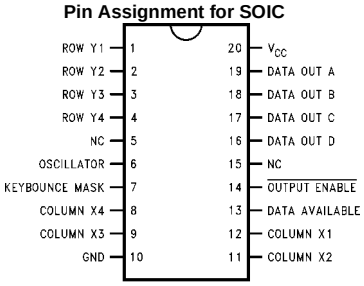

Top View
MM74C922

© 1999 Fairchild Semiconductor Corporation

Connection Diagrams (Continued)

Pin Assignment for DIP and SOIC Package

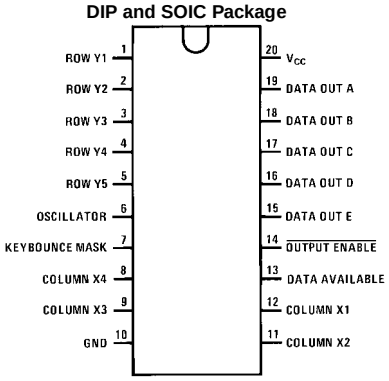

Top View
MM74C923

Truth Tables

(Pins 0 through 11)

Switch Position		0 Y1,X1	1 Y1,X2	2 Y1,X3	3 Y1,X4	4 Y2,X1	5 Y2,X2	6 Y2,X3	7 Y2,X4	8 Y3,X1	9 Y3,X2	10 Y3,X3	11 Y3,X4
DATA OUT	A	0	1	0	1	0	1	0	1	0	1	0	1
	B	0	0	1	1	0	0	1	1	0	0	1	1
	C	0	0	0	0	1	1	1	1	0	0	0	0
	D	0	0	0	0	0	0	0	0	1	1	1	1
	E (Note 1)	0	0	0	0	0	0	0	0	0	0	0	0

(Pins 12 through 19)

Switch Position		12 Y4,X1	13 Y4,X2	14 Y4,X3	15 Y4,X4	16 Y5(Note 1), X1	17 Y5 (Note 1), X2	18 Y5 (Note 1), X3	19 Y5 (Note 1), X4
DATA OUT	A	0	1	0	1	0	1	0	1
	B	0	0	1	1	0	0	1	1
	C	1	1	1	1	0	0	0	0
	D	1	1	1	1	0	0	0	0
	E (Note 1)	0	0	0	0	1	1	1	1

Note 1: Omit for MM74C922

Block Diagram

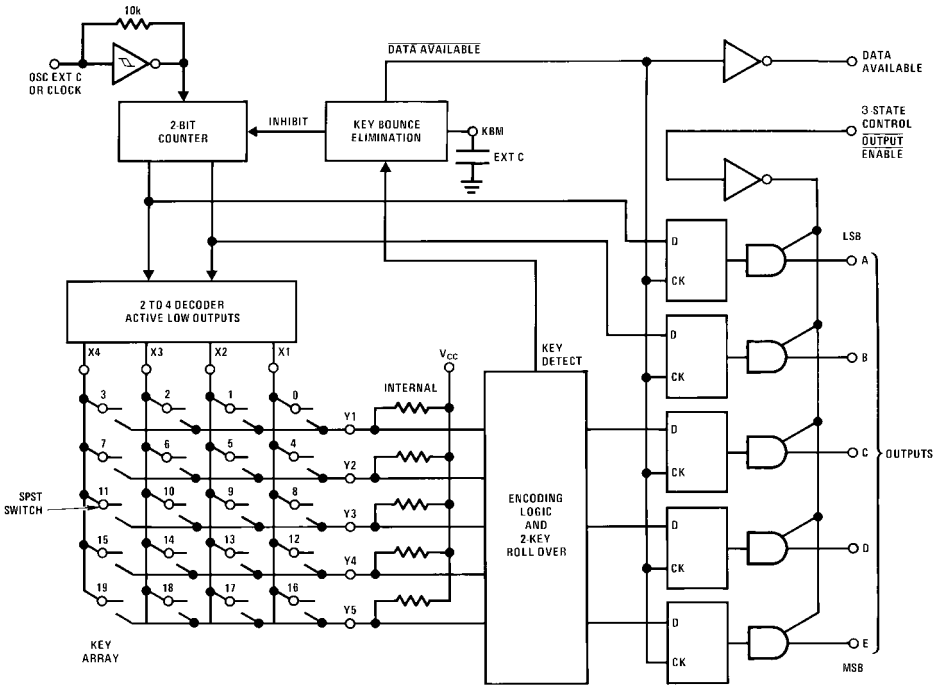

Absolute Maximum Ratings (Note 2)

Voltage at Any Pin	V_{CC} – 0.3V to V_{CC} + 0.3V
Operating Temperature Range	
MM74C922, MM74C923	–40°C to +85°C
Storage Temperature Range	–65°C to +150°C
Power Dissipation (P_D)	
Dual-In-Line	700 mW
Small Outline	500 mW
Operating V_{CC} Range	3V to 15V
V_{CC}	18V
Lead Temperature	
(Soldering, 10 seconds)	260°C

Note 2: "Absolute Maximum Ratings" are those values beyond which the safety of the device cannot be guaranteed. Except for "Operating Temperature Range" they are not meant to imply that the devices should be operated at these limits. The table of "Electrical Characteristics" provides conditions for actual device operation.

DC Electrical Characteristics

Min/Max limits apply across temperature range unless otherwise specified

Symbol	Parameter	Conditions	Min	Typ	Max	Units
CMOS TO CMOS						
V_{T+}	Positive-Going Threshold Voltage at Osc and KBM Inputs	V_{CC} = 5V, I_{IN} ≥ 0.7 mA	3.0	3.6	4.3	V
		V_{CC} = 10V, I_{IN} ≥ 1.4 mA	6.0	6.8	8.6	V
		V_{CC} = 15V, I_{IN} ≥ 2.1 mA	9.0	10	12.9	V
V_{T-}	Negative-Going Threshold Voltage at Osc and KBM Inputs	V_{CC} = 5V, I_{IN} ≥ 0.7 mA	0.7	1.4	2.0	V
		V_{CC} = 10V, I_{IN} ≥ 1.4 mA	1.4	3.2	4.0	V
		V_{CC} = 15V, I_{IN} ≥ 2.1 mA	2.1	5	6.0	V
$V_{IN(1)}$	Logical "1" Input Voltage, Except Osc and KBM Inputs	V_{CC} = 5V	3.5	4.5		V
		V_{CC} = 10V	8.0	9		V
		V_{CC} = 15V	12.5	13.5		V
$V_{IN(0)}$	Logical "0" Input Voltage, Except Osc and KBM Inputs	V_{CC} = 5V		0.5	1.5	V
		V_{CC} = 10V		1	2	V
		V_{CC} = 15V		1.5	2.5	V
I_{rp}	Row Pull-Up Current at Y1, Y2, Y3, Y4 and Y5 Inputs	V_{CC} = 5V, V_{IN} = 0.1 V_{CC}		–2	–5	µA
		V_{CC} = 10V		–10	–20	µA
		V_{CC} = 15V		–22	–45	µA
$V_{OUT(1)}$	Logical "1" Output Voltage	V_{CC} = 5V, I_O = –10 µA	4.5			V
		V_{CC} = 10V, I_O = –10 µA	9			V
		V_{CC} = 15V, I_O = –10 µA	13.5			V
$V_{OUT(0)}$	Logical "0" Output Voltage	V_{CC} = 5V, I_O = 10 µA			0.5	V
		V_{CC} = 10V, I_O = 10 µA			1	V
		V_{CC} = 15V, I_O = 10 µA			1.5	V
R_{on}	Column "ON" Resistance at X1, X2, X3 and X4 Outputs	V_{CC} = 5V, V_O = 0.5V		500	1400	Ω
		V_{CC} = 10V, V_O = 1V		300	700	Ω
		V_{CC} = 15V, V_O = 1.5V		200	500	Ω
I_{CC}	Supply Current Osc at 0V, (one Y low)	V_{CC} = 5V		0.55	1.1	mA
		V_{CC} = 10V		1.1	1.9	mA
		V_{CC} = 15V		1.7	2.6	mA
$I_{IN(1)}$	Logical "1" Input Current at $\overline{\text{Output Enable}}$	V_{CC} = 15V, V_{IN} = 15V		0.005	1.0	µA
$I_{IN(0)}$	Logical "0" Input Current at $\overline{\text{Output Enable}}$	V_{CC} = 15V, V_{IN} = 0V	–1.0	–0.005		µA
CMOS/LPTTL INTERFACE						
$V_{IN(1)}$	Except Osc and KBM Inputs	V_{CC} = 4.75V	V_{CC} – 1.5			V
$V_{IN(0)}$	Except Osc and KBM Inputs	V_{CC} = 4.75V			0.8	V
$V_{OUT(1)}$	Logical "1" Output Voltage	I_O = –360 µA, V_{CC} = 4.75V, I_O = –360 µA	2.4			V
$V_{OUT(0)}$	Logical "0" Output Voltage	I_O = –360 µA, V_{CC} = 4.75V, I_O = –360 µA			0.4	V

DC Electrical Characteristics (Continued)

Symbol	Parameter	Conditions	Min	Typ	Max	Units
OUTPUT DRIVE (See Family Characteristics Data Sheet) (Short Circuit Current)						
I_{SOURCE}	Output Source Current (P-Channel)	V_{CC} = 5V, V_{OUT} = 0V, T_A = 25°C	−1.75	−3.3		mA
I_{SOURCE}	Output Source Current (P-Channel)	V_{CC} = 10V, V_{OUT} = 0V, T_A = 25°C	−8	−15		mA
I_{SINK}	Output Sink Current (N-Channel)	V_{CC} = 5V, V_{OUT} = V_{CC}, T_A = 25°C	1.75	3.6		mA
I_{SINK}	Output Sink Current (N-Channel)	V_{CC} = 10V, V_{OUT} = V_{CC}, T_A = 25°C	8	16		mA

AC Electrical Characteristics (Note 3)

T_A = 25°C, C_L = 50 pF, unless otherwise noted

Symbol	Parameter	Conditions	Min	Typ	Max	Units
t_{pd0}, t_{pd1}	Propagation Delay Time to Logical “0” or Logical “1” from D.A.	C_L = 50 pF (Figure 1)				
		V_{CC} = 5V		60	150	ns
		V_{CC} = 10V		35	80	ns
		V_{CC} = 15V		25	60	ns
t_{0H}, t_{1H}	Propagation Delay Time from Logical “0” or Logical “1” into High Impedance State	R_L = 10k, C_L = 10 pF (Figure 2)				
		V_{CC} = 5V, R_L = 10k		80	200	ns
		V_{CC} = 10V, C_L = 10 pF		65	150	ns
		V_{CC} = 15V		50	110	ns
t_{H0}, t_{H1}	Propagation Delay Time from High Impedance State to a Logical “0” or Logical “1”	R_L = 10k, C_L = 50 pF (Figure 2)				
		V_{CC} = 5V, R_L = 10k		100	250	ns
		V_{CC} = 10V, C_L = 50 pF		55	125	ns
		V_{CC} = 15V		40	90	ns
C_{IN}	Input Capacitance	Any Input (Note 4)		5	7.5	pF
C_{OUT}	3-STATE Output Capacitance	Any Output (Note 4)		10		pF

Note 3: AC Parameters are guaranteed by DC correlated testing.

Note 4: Capacitance is guaranteed by periodic testing.

Switching Time Waveforms

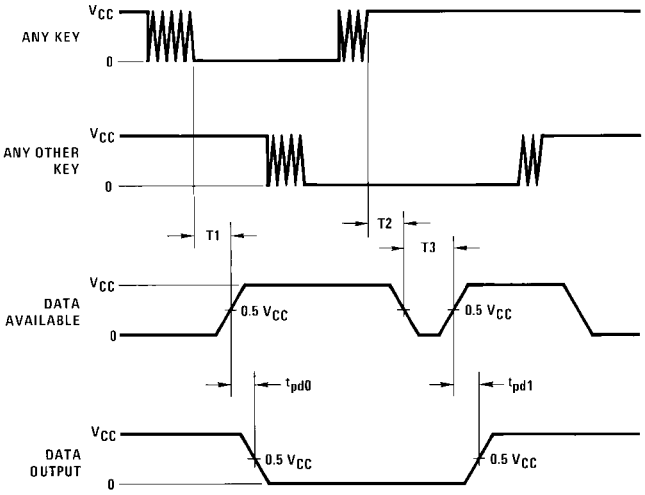

T1 ≈ T2 ≈ RC, T3 ≈ 0.7 RC, where R ≈ 10k and C is external capacitor at KBM input.

FIGURE 1.

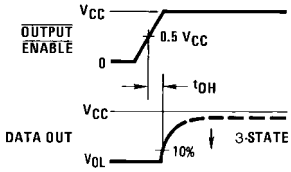

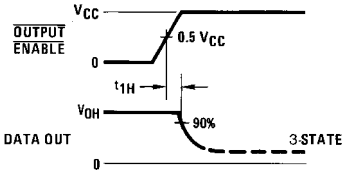

FIGURE 2.

Typical Performance Characteristics

Typical I_{rp} vs V_{IN} at Any Y Input

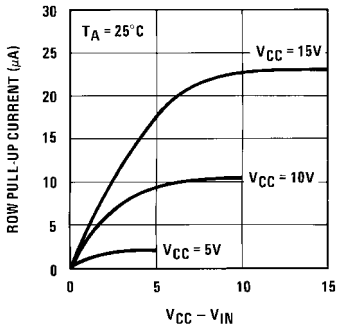

Typical R_{on} vs V_{OUT} at Any X Output

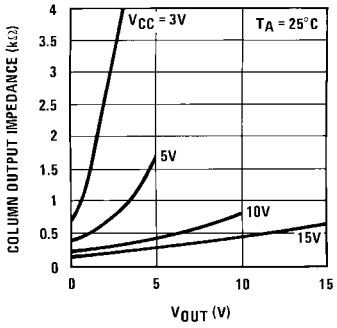

Typical F_{SCAN} vs C_{OSC}

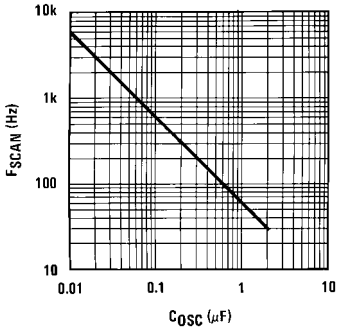

Typical Debounce Period vs C_{KBM}

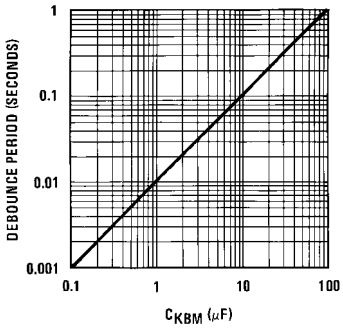

Typical Applications

Synchronous Handshake (MM74C922)

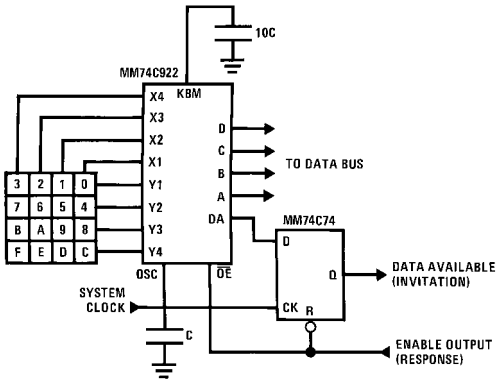

The keyboard may be synchronously scanned by omitting the capacitor at osc. and driving osc. directly if the system clock rate is lower than 10 kHz

Synchronous Data Entry Onto Bus (MM74C922)

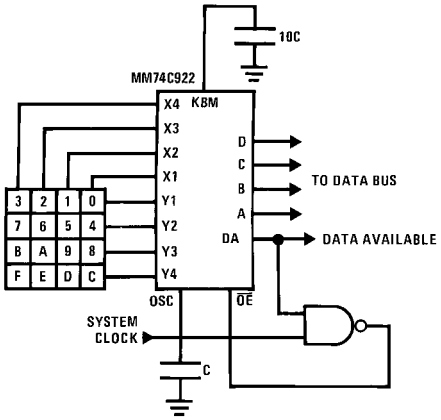

Outputs are enabled when valid entry is made and go into 3-STATE when key is released.

The keyboard may be synchronously scanned by omitting the capacitor at osc. and driving osc. directly if the system clock rate is lower than 10 kHz

Asynchronous Data Entry Onto Bus (MM74C922)

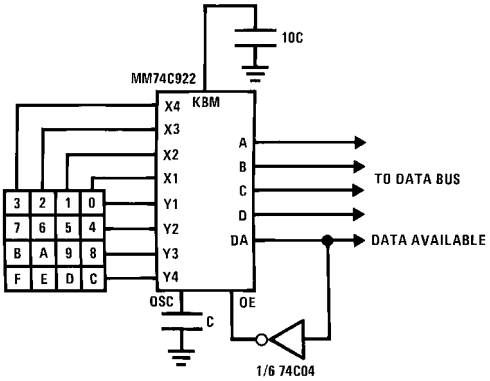

Outputs are in 3-STATE until key is pressed, then data is placed on bus. When key is released, outputs return to 3-STATE.

Expansion to 32 Key Encoder (MM74C922)

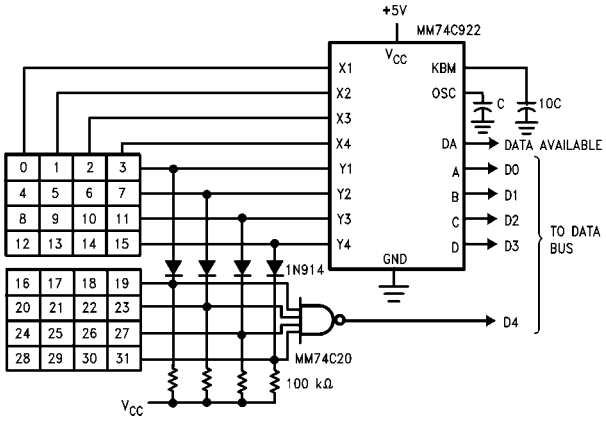

Theory of Operation

The MM74C922/MM74C923 Keyboard Encoders implement all the logic necessary to interface a 16 or 20 SPST key switch matrix to a digital system. The encoder will convert a key switch closer to a 4(MM74C922) or 5(MM74C923) bit nibble. The designer can control both the keyboard scan rate and the key debounce period by altering the oscillator capacitor, C_{OSE}, and the key bounce mask capacitor, C_{MSK}. Thus, the MM74C922/MM74C923's performance can be optimized for many keyboards.

The keyboard encoders connect to a switch matrix that is 4 rows by 4 columns (MM74C922) or 5 rows by 4 columns (MM74C923). When no keys are depressed, the row inputs are pulled high by internal pull-ups and the column outputs sequentially output a logic "0". These outputs are open drain and are therefore low for 25% of the time and otherwise off. The column scan rate is controlled by the oscillator input, which consists of a Schmitt trigger oscillator, a 2-bit counter, and a 2–4-bit decoder.

When a key is depressed, key 0, for example, nothing will happen when the X1 input is off, since Y1 will remain high. When the X1 column is scanned, X1 goes low and Y1 will go low. This disables the counter and keeps X1 low. Y1 going low also initiates the key bounce circuit timing and locks out the other Y inputs. The key code to be output is a combination of the frozen counter value and the decoded Y inputs. Once the key bounce circuit times out, the data is latched, and the Data Available (DAV) output goes high.

If, during the key closure the switch bounces, Y1 input will go high again, restarting the scan and resetting the key bounce circuitry. The key may bounce several times, but as soon as the switch stays low for a debounce period, the closure is assumed valid and the data is latched.

A key may also bounce when it is released. To ensure that the encoder does not recognize this bounce as another key closure, the debounce circuit must time out before another closure is recognized.

The two-key roll-over feature can be illustrated by assuming a key is depressed, and then a second key is depressed. Since all scanning has stopped, and all other Y inputs are disabled, the second key is not recognized until the first key is lifted and the key bounce circuitry has reset.

The output latches feed 3-STATE, which is enabled when the Output Enable ($\overline{OE}$) input is taken low.

Physical Dimensions inches (millimeters) unless otherwise noted

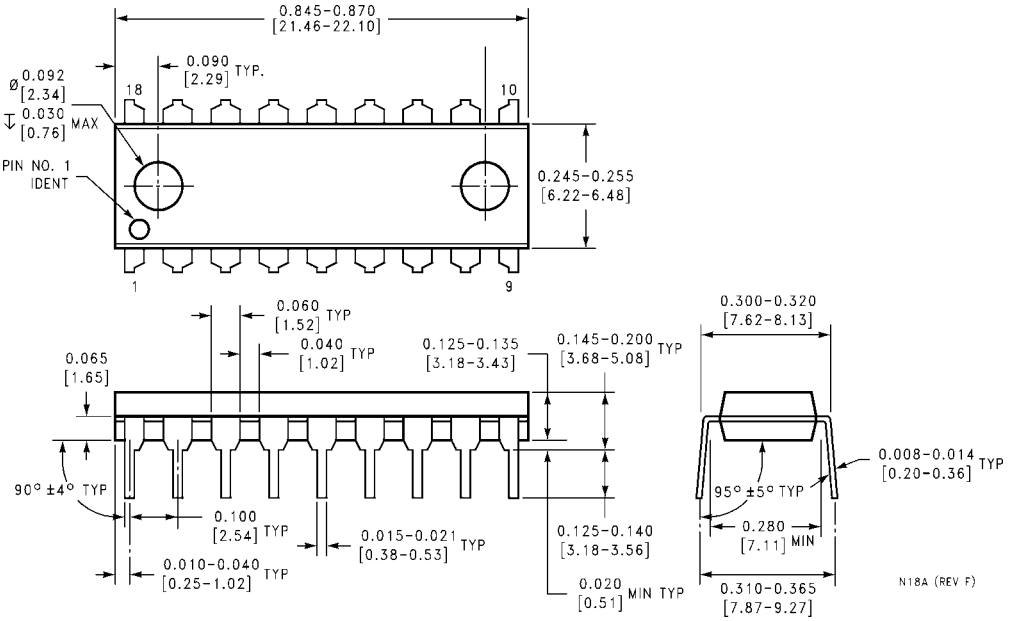

18-Lead Plastic Dual-In-Line Package (PDIP), JEDEC MS-001, 0.300" Wide
Package Number N18A

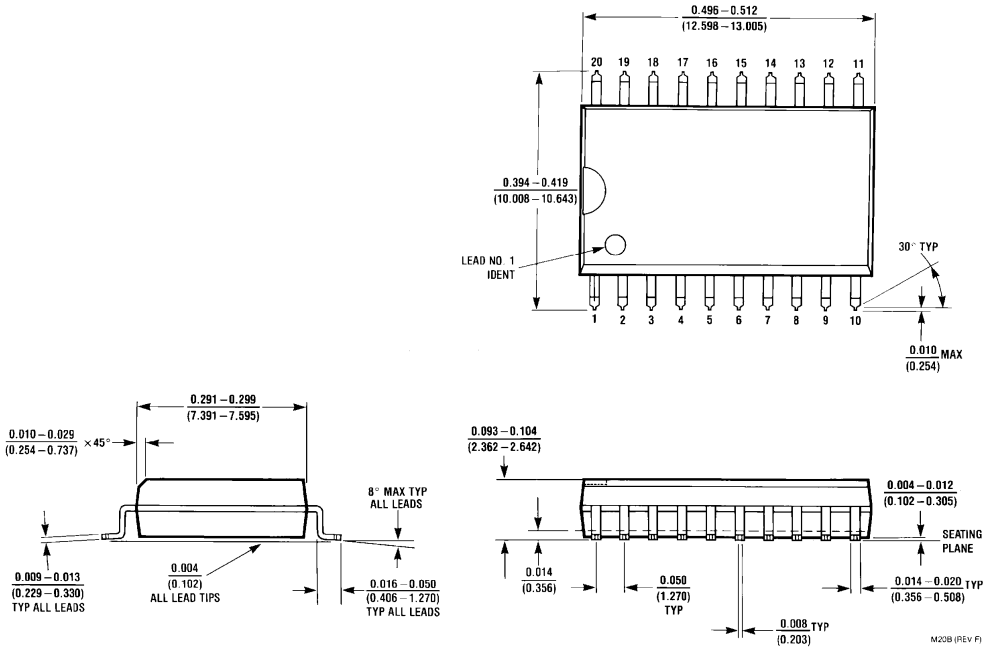

20-Lead Plastic Small Outline I.C. Package (M)
Package Number M20B

Physical Dimensions inches (millimeters) unless otherwise noted (Continued)

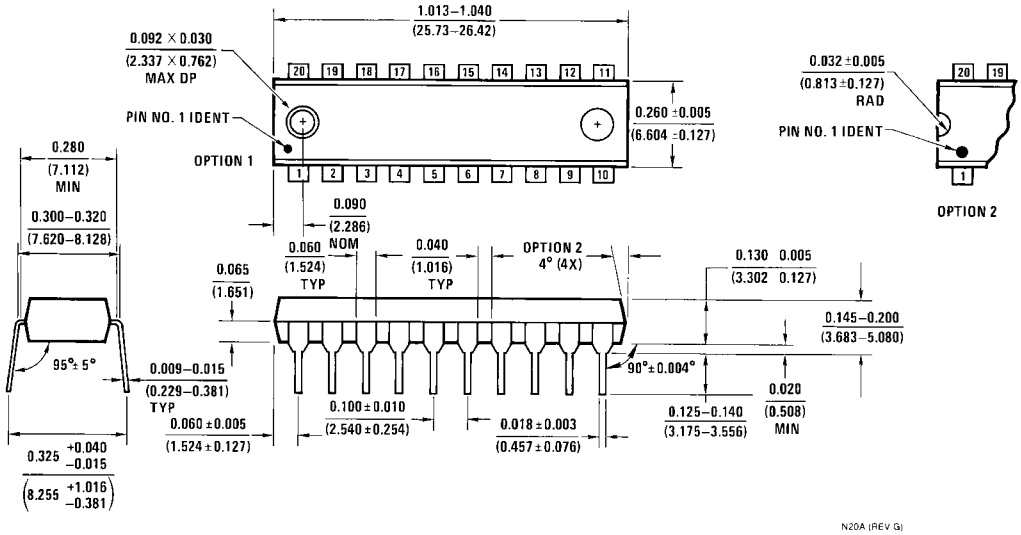

20-Lead Plastic Dual-In-Line Package (PDIP), JEDEC MS-001, 0.300" Wide
Package Number N20A

LIFE SUPPORT POLICY

FAIRCHILD'S PRODUCTS ARE NOT AUTHORIZED FOR USE AS CRITICAL COMPONENTS IN LIFE SUPPORT DEVICES OR SYSTEMS WITHOUT THE EXPRESS WRITTEN APPROVAL OF THE PRESIDENT OF FAIRCHILD SEMICONDUCTOR CORPORATION. As used herein:

1. Life support devices or systems are devices or systems which, (a) are intended for surgical implant into the body, or (b) support or sustain life, and (c) whose failure to perform when properly used in accordance with instructions for use provided in the labeling, can be reasonably expected to result in a significant injury to the user.
2. A critical component in any component of a life support device or system whose failure to perform can be reasonably expected to cause the failure of the life support device or system, or to affect its safety or effectiveness.

www.fairchildsemi.com

Fairchild does not assume any responsibility for use of any circuitry described, no circuit patent licenses are implied and Fairchild reserves the right at any time without notice to change said circuitry and specifications.

SGS-THOMSON MICROELECTRONICS

74AC04

HEX INVERTER

- HIGH SPEED: t_{PD} = 4 ns (TYP.) at V_{CC} = 5V
- LOW POWER DISSIPATION: I_{CC} = 4 µA (MAX.) at T_A = 25 °C
- HIGH NOISE IMMUNITY: $V_{NIH} = V_{NIL}$ = 28% V_{CC} (MIN.)
- 50Ω TRANSMISSION LINE DRIVING CAPABILITY
- SYMMETRICAL OUTPUT IMPEDANCE: $|I_{OH}| = I_{OL}$ = 24 mA (MIN)
- BALANCED PROPAGATION DELAYS: $t_{PLH} \cong t_{PHL}$
- OPERATING VOLTAGE RANGE: V_{CC} (OPR) = 2V to 6V
- PIN AND FUNCTION COMPATIBLE WITH 74 SERIES 04
- IMPROVED LATCH-UP IMMUNITY

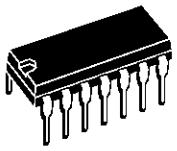

B
(Plastic Package)

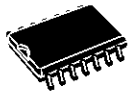

M
(Micro Package)

ORDER CODES :

74AC04B 74AC04M

DESCRIPTION

The AC04 is an advanced high-speed CMOS HEX INVERTER fabricated with sub-micron silicon gate and double-layer metal wiring C^2MOS technology. It is ideal for low power applications mantaining high speed operation similar to equivalent Bipolar Schottky TTL.

The internal circuit is composed of 3 stages including buffer output, which enables high noise immunity and stable output.

All inputs and outputs are equipped with protection circuits against static discharge, giving them 2KV ESD immunity and transient excess voltage.

PIN CONNECTION AND IEC LOGIC SYMBOLS

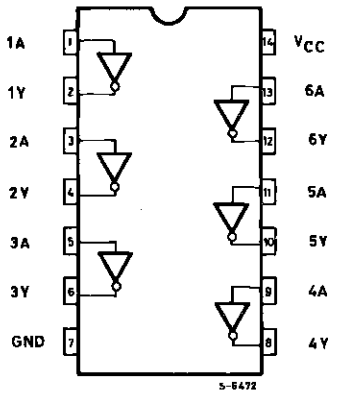

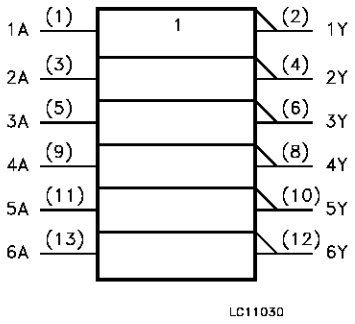

INPUT AND OUTPUT EQUIVALENT CIRCUIT

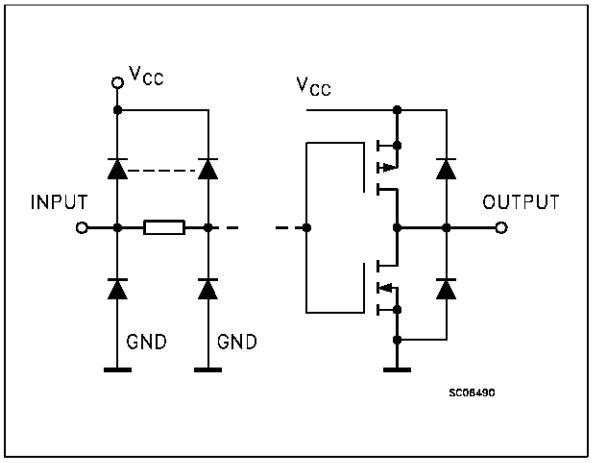

PIN DESCRIPTION

PIN No	SYMBOL	NAME AND FUNCTION
1, 3, 5, 9, 11, 13	1A to 6A	Data Inputs
2, 4, 6, 8, 10, 12	1Y to 6Y	Data Oututs
7	GND	Ground (0V)
14	V_{CC}	Positive Supply Voltage

TRUTH TABLE

A	Y
L	H
H	L

ABSOLUTE MAXIMUM RATINGS

Symbol	Parameter	Value	Unit
V_{CC}	Supply Voltage	-0.5 to +7	V
V_I	DC Input Voltage	-0.5 to V_{CC} + 0.5	V
V_O	DC Output Voltage	-0.5 to V_{CC} + 0.5	V
I_{IK}	DC Input Diode Current	± 20	mA
I_{OK}	DC Output Diode Current	± 20	mA
I_O	DC Output Current	± 50	mA
I_{CC} or I_{GND}	DC V_{CC} or Ground Current	± 300	mA
T_{stg}	Storage Temperature	-65 to +150	^oC
T_L	Lead Temperature (10 sec)	300	^oC

Absolute Maximum Ratings are those values beyond which damage to the device may occur. Functional operation under these condition is not implied.

RECOMMENDED OPERATING CONDITIONS

Symbol	Parameter	Value	Unit
V_{CC}	Supply Voltage	2 to 6	V
V_I	Input Voltage	0 to V_{CC}	V
V_O	Output Voltage	0 to V_{CC}	V
T_{op}	Operating Temperature:	-40 to +85	^oC
dt/dv	Input Rise and Fall Time V_{CC} = 3.0, 4.5 or 5.5 V(note 1)	8	ns/V

1) V_{IN} from 30% to 70% of V_{CC}

DC SPECIFICATIONS

Symbol	Parameter	Test Conditions			Value					Unit
		V_{CC} (V)			T_A = 25 °C			-40 to 85 °C		
					Min.	Typ.	Max.	Min.	Max.	
V_{IH}	High Level Input Voltage	3.0	V_O = 0.1 V or V_{CC} - 0.1 V		2.1	1.5		2.1		V
		4.5			3.15	2.25		3.15		
		5.5			3.85	2.75		3.85		
V_{IL}	Low Level Input Voltage	3.0	V_O = 0.1 V or V_{CC} - 0.1 V			1.5	0.9		0.9	V
		4.5				2.25	1.35		1.35	
		5.5				2.75	1.65		1.65	
V_{OH}	High Level Output Voltage	3.0	V_I(*) = V_{IH} or V_{IL}	I_O=-50 µA	2.9	2.99		2.9		V
		4.5		I_O=-50 µA	4.4	4.49		4.4		
		5.5		I_O=-50 µA	5.4	5.49		5.4		
		3.0		I_O=-12 mA	2.56			2.46		
		4.5		I_O=-24 mA	3.86			3.76		
		5.5		I_O=-24 mA	4.86			4.76		
V_{OL}	Low Level Output Voltage	3.0	V_I(*) = V_{IH} or V_{IL}	I_O=50 µA		0.002	0.1		0.1	V
		4.5		I_O=50 µA		0.001	0.1		0.1	
		5.5		I_O=50 µA		0.001	0.1		0.1	
		3.0		I_O=12 mA			0.36		0.44	
		4.5		I_O=24 mA			0.36		0.44	
		5.5		I_O=24 mA			0.36		0.44	
I_I	Input Leakage Current	5.5	V_I = V_{CC} or GND				±0.1		±1	µA
I_{CC}	Quiescent Supply Current	5.5	V_I = V_{CC} or GND				4		40	µA
I_{OLD}	Dynamic Output Current (note 1, 2)	5.5	V_{OLD} = 1.65 V max						75	mA
I_{OHD}			V_{OHD} = 3.85 V min						-75	mA

1) Maximum test duration 2ms, one output loaded at time
2) Incident wave switching is guaranteed on transmission lines with impedances as low as 50 Ω.
(*) All outputs loaded.

AC ELECTRICAL CHARACTERISTICS (C_L = 50 pF, R_L = 500 Ω, Input t_r = t_f =3 ns)

Symbol	Parameter	Test Condition		Value					Unit
		V_{CC} (V)		T_A = 25 °C			-40 to 85 °C		
				Min.	Typ.	Max.	Min.	Max.	
t_{PLH} t_{PHL}	Propagation Delay Time	3.3(*)		1.5	5.0	9.0	1.0	10.0	ns
		5.0(**)		1.5	4.0	7.0	1.0	8.0	

(*) Voltage range is 3.3V ± 0.3V
(**) Voltage range is 5V ± 0.5V

CAPACITIVE CHARACTERISTICS

Symbol	Parameter	Test Conditions		Value					Unit
		V_{CC} (V)		T_A = 25 °C			-40 to 85 °C		
				Min.	Typ.	Max.	Min.	Max.	
C_{IN}	Input Capacitance	5.0			4				pF
C_{PD}	Power Dissipation Capacitance (note 1)	5.0			33				pF

1) C_{PD} is defined as the value of the IC's internal equivalent capacitance which is calculated from the operating current consumption without load. (Refer to Test Circuit). Average operating current can be obtained by the following equation. $I_{CC}(opr) = C_{PD} \bullet V_{CC} \bullet f_{IN} + I_{CC}/n$ (per circuit)

TEST CIRCUIT

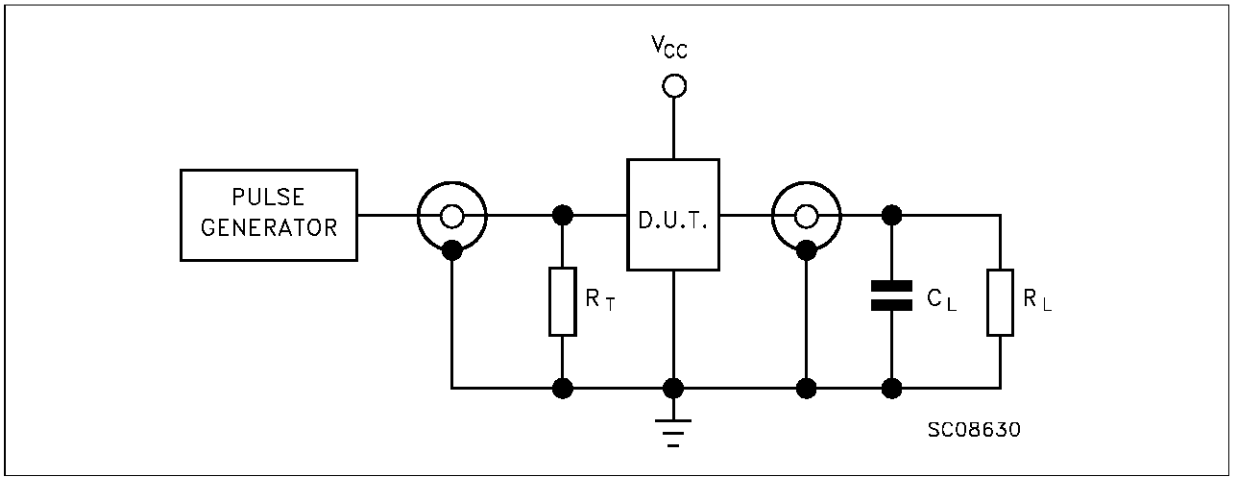

C_L = 50 pF or equivalent (includes jig and probe capacitance)
$R_L = R_1$ = 500Ω or equivalent
$R_T = Z_{OUT}$ of pulse generator (typically 50Ω)

WAVEFORM: PROPAGATION DELAYS (f=1MHz; 50% duty cycle)

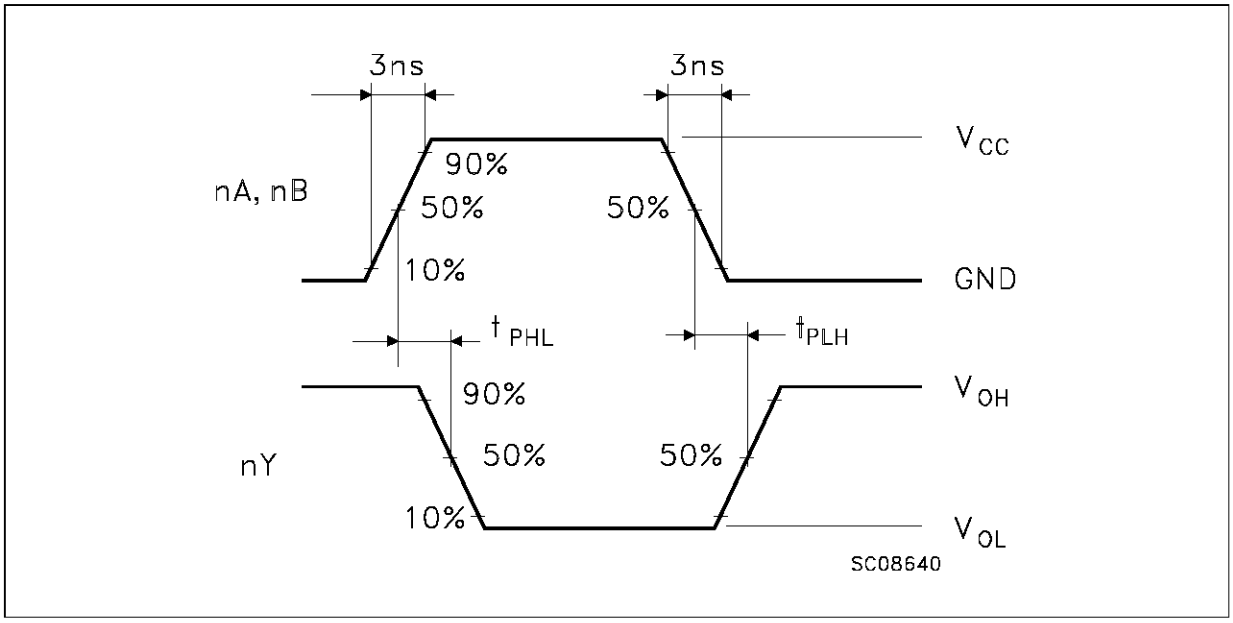

Plastic DIP14 MECHANICAL DATA

DIM.	mm			inch		
	MIN.	TYP.	MAX.	MIN.	TYP.	MAX.
a1	0.51			0.020		
B	1.39		1.65	0.055		0.065
b		0.5			0.020	
b1		0.25			0.010	
D			20			0.787
E		8.5			0.335	
e		2.54			0.100	
e3		15.24			0.600	
F			7.1			0.280
I			5.1			0.201
L		3.3			0.130	
Z	1.27		2.54	0.050		0.100

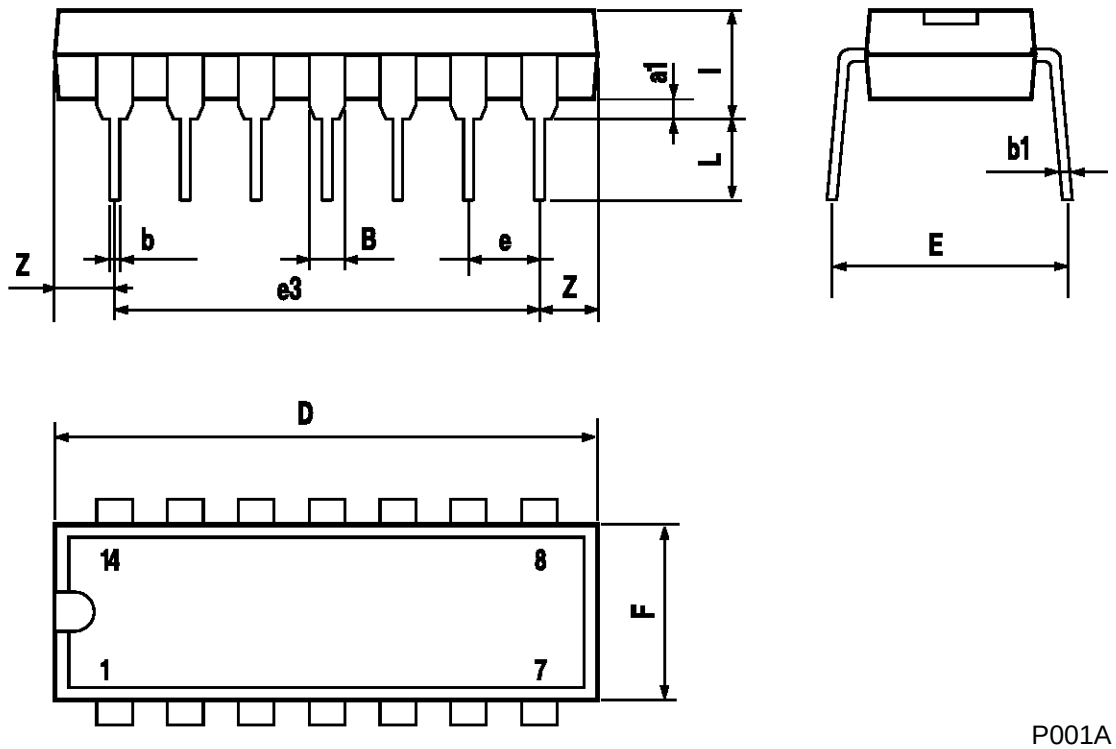

P001A

SO14 MECHANICAL DATA

DIM.	mm			inch		
	MIN.	TYP.	MAX.	MIN.	TYP.	MAX.
A			1.75			0.068
a1	0.1		0.2	0.003		0.007
a2			1.65			0.064
b	0.35		0.46	0.013		0.018
b1	0.19		0.25	0.007		0.010
C		0.5			0.019	
c1	45 (typ.)					
D	8.55		8.75	0.336		0.344
E	5.8		6.2	0.228		0.244
e		1.27			0.050	
e3		7.62			0.300	
F	3.8		4.0	0.149		0.157
G	4.6		5.3	0.181		0.208
L	0.5		1.27	0.019		0.050
M			0.68			0.026
S	8 (max.)					

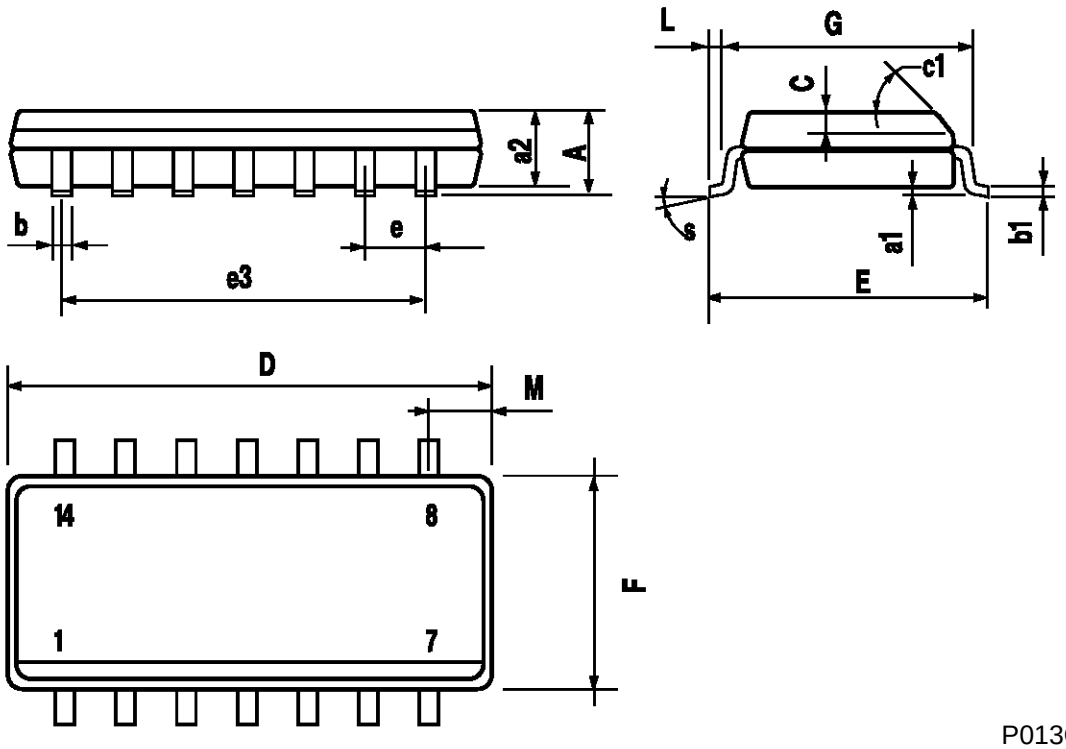

P013G

Information furnished is believed to be accurate and reliable. However, SGS-THOMSON Microelectronics assumes no responsability for the consequences of use of such information nor for any infringement of patents or other rights of third parties which may results from its use. No license is granted by implication or otherwise under any patent or patent rights of SGS-THOMSON Microelectronics. Specifications mentioned in this publication are subject to change without notice. This publication supersedes and replaces all information previously supplied.
SGS-THOMSON Microelectronics products are not authorized for use as critical components in life support devices or systems without express written approval of SGS-THOMSON Microelectonics.

© 1997 SGS-THOMSON Microelectronics - Printed in Italy - All Rights Reserved

SGS-THOMSON Microelectronics GROUP OF COMPANIES
Australia - Brazil - Canada - China - France - Germany - Hong Kong - Italy - Japan - Korea - Malaysia - Malta - Morocco - The Netherlands - Singapore - Spain - Sweden - Switzerland - Taiwan - Thailand - United Kingdom - U.S.A
.

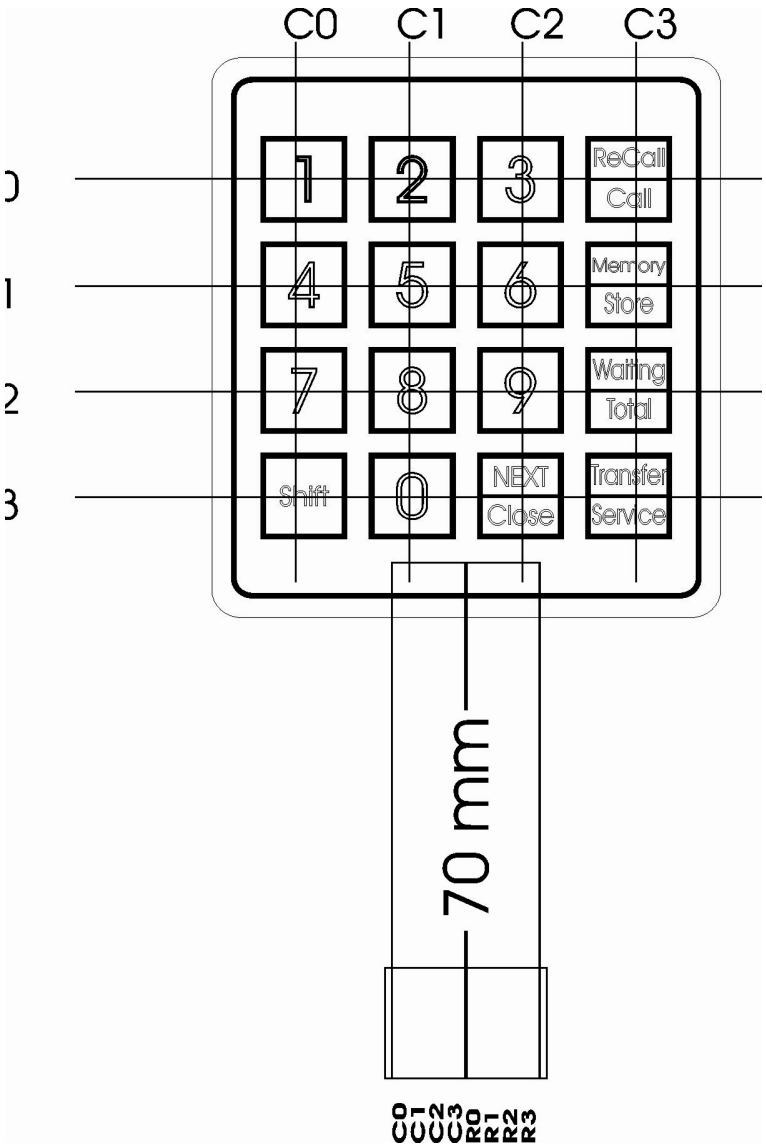
C0
C1
C2
C3
0
1
2
3
1
2
3
ReCall
Call
4
5
6
Memory
Store
7
8
9
Waiting
Total
Shift
0
NEXT
Close
Transfer
Service
70 mm
C0
C1
C2
C3
R0
R1
R2
R3

LM117/LM317A/LM317-N 3-Terminal Adjustable Regulator

Check for Samples: LM117, LM317-N

FEATURES

- **Specified 1% Output Voltage Tolerance (LM317A)**
- **Specified Max. 0.01%/V Line Regulation (LM317A)**
- **Specified Max. 0.3% Load Regulation (LM117)**
- **Specified 1.5A Output Current**
- **Adjustable Output Down to 1.2V**
- **Current Limit Constant With Temperature**
- **P^+ Product Enhancement Tested**
- **80 dB Ripple Rejection**
- **Output is Short-Circuit Protected**

DESCRIPTION

The LM117 series of adjustable 3-terminal positive voltage regulators is capable of supplying in excess of 1.5A over a 1.2V to 37V output range. They are exceptionally easy to use and require only two external resistors to set the output voltage. Further, both line and load regulation are better than standard fixed regulators. Also, the LM117 is packaged in standard transistor packages which are easily mounted and handled.

In addition to higher performance than fixed regulators, the LM117 series offers full overload protection available only in IC's. Included on the chip are current limit, thermal overload protection and safe area protection. All overload protection circuitry remains fully functional even if the adjustment terminal is disconnected.

Normally, no capacitors are needed unless the device is situated more than 6 inches from the input filter capacitors in which case an input bypass is needed. An optional output capacitor can be added to improve transient response. The adjustment terminal can be bypassed to achieve very high ripple rejection ratios which are difficult to achieve with standard 3-terminal regulators.

Besides replacing fixed regulators, the LM117 is useful in a wide variety of other applications. Since the regulator is “floating” and sees only the input-to-output differential voltage, supplies of several hundred volts can be regulated as long as the maximum input to output differential is not exceeded, i.e., avoid short-circuiting the output.

Also, it makes an especially simple adjustable switching regulator, a programmable output regulator, or by connecting a fixed resistor between the adjustment pin and output, the LM117 can be used as a precision current regulator. Supplies with electronic shutdown can be achieved by clamping the adjustment terminal to ground which programs the output to 1.2V where most loads draw little current.

For applications requiring greater output current, see LM150 series (3A) and LM138 series (5A) data sheets. For the negative complement, see LM137 series data sheet.

Please be aware that an important notice concerning availability, standard warranty, and use in critical applications of Texas Instruments semiconductor products and disclaimers thereto appears at the end of this data sheet.

All trademarks are the property of their respective owners.

PRODUCTION DATA information is current as of publication date. Products conform to specifications per the terms of the Texas Instruments standard warranty. Production processing does not necessarily include testing of all parameters.

Copyright © 2004–2011, Texas Instruments Incorporated

Typical Applications

Figure 1. 1.2V–25V Adjustable Regulator

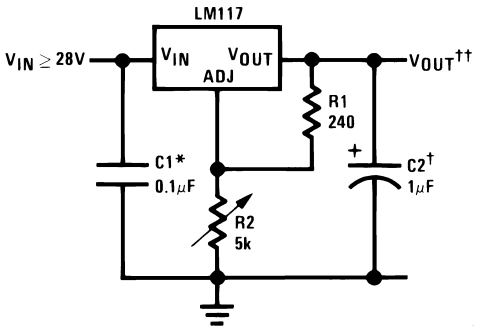

Full output current not available at high input-output voltages
*Needed if device is more than 6 inches from filter capacitors.
†Optional—improves transient response. Output capacitors in the range of 1μF to 1000μF of aluminum or tantalum electrolytic are commonly used to provide improved output impedance and rejection of transients.

$$\dagger\dagger V_{OUT} = 1.25V\left(1 + \frac{R2}{R1}\right) + I_{ADJ}(R_2)$$

LM117/LM317A/LM317-N Package Options

Part Number	Suffix	Package	Output Current
LM117, LM317-N	NDS	TO-3	1.5A
LM317A, LM317-N	NDE	TO-220	1.5A
LM317-N	KTT	TO-263	1.5A
LM317A, LM317-N	DCY	SOT-223	1.0A
LM117, LM317A, LM317-N	NDT	TO	0.5A
LM117	NAJ	LCCC	0.5A
LM317A, LM317-N	NDP	PFM	0.5A

SOT-223 vs. PFM Packages

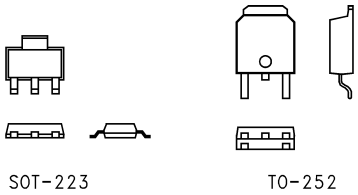

Figure 2. Scale 1:1

Connection Diagrams

TO-3 (NDS) Metal Can Package

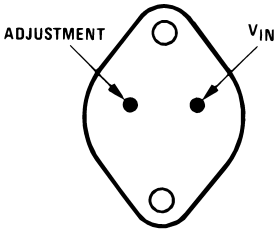

CASE IS OUTPUT

Figure 3. Bottom View Bottom View Package Number NDS or K

TO (NDT) Metal Can Package

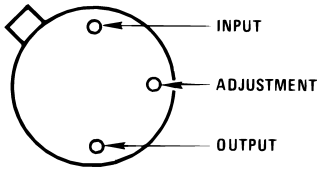

CASE IS OUTPUT

Figure 4. Bottom View Package Number NDT

Figure 5. TO-263 (KTT) Surface-Mount Package

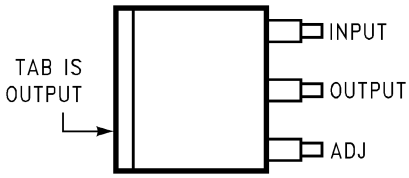

Figure 6. Top View

TO-263 (KTT) Surface-Mount Package

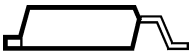

Figure 7. Side View Package Number KTT

Copyright © 2004–2011, Texas Instruments Incorporated

TO-220 (NDE)
Plastic Package

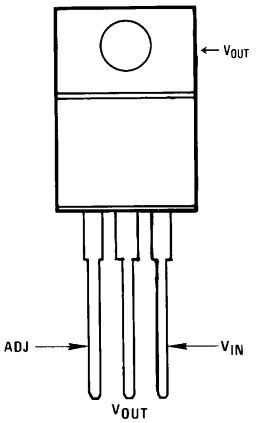

Figure 8. Front View
Package Number NDE

Ceramic Leadless Chip Carrier (NAJ)

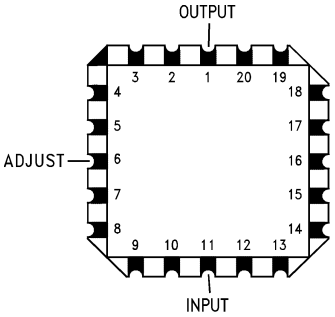

Figure 9. Top View
Package Number NAJ

4-Lead SOT-223 (DCY)

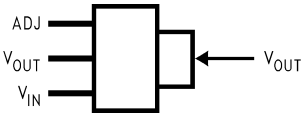

Figure 10. Front View
Package Number DCY

PFM (NDP)

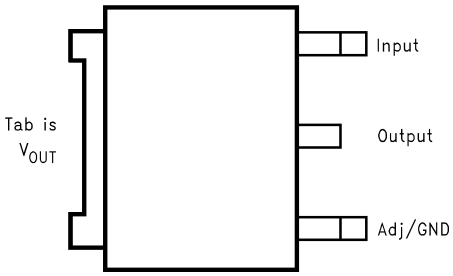

Figure 11. Front View
Package Number NDP

These devices have limited built-in ESD protection. The leads should be shorted together or the device placed in conductive foam during storage or handling to prevent electrostatic damage to the MOS gates.

Absolute Maximum Ratings[1][2]

Power Dissipation		Internally Limited
Input-Output Voltage Differential		+40V, −0.3V
Storage Temperature		−65°C to +150°C
Lead Temperature	Metal Package (Soldering, 10 seconds)	300°C
	Plastic Package (Soldering, 4 seconds)	260°C
ESD Tolerance [3]		3 kV

(1) Absolute Maximum Ratings indicate limits beyond which damage to the device may occur. Operating Ratings indicate conditions for which the device is intended to be functional, but do not ensure specific performance limits. For ensured specifications and test conditions, see the Electrical Characteristics. The ensured specifications apply only for the test conditions listed.
(2) If Military/Aerospace specified devices are required, please contact the Texas Instruments Sales Office/Distributors for availability and specifications.
(3) Human body model, 100 pF discharged through a 1.5 kΩ resistor.

Operating Temperature Range

LM117	−55°C ≤ T_J ≤ +150°C
LM317A	−40°C ≤ T_J ≤ +125°C
LM317-N	0°C ≤ T_J ≤ +125°C
Preconditioning	
Thermal Limit Burn-In	All Devices 100%

LM117 Electrical Characteristics[1]

Specifications with standard type face are for T_J = 25°C, and those with **boldface type** apply over **full Operating Temperature Range**. Unless otherwise specified, $V_{IN} - V_{OUT}$ = 5V, and I_{OUT} = 10 mA.

Parameter	Conditions		LM117 [2]			
			Min	Typ	Max	Units
Reference Voltage	3V ≤ ($V_{IN} - V_{OUT}$) ≤ 40V, 10 mA ≤ I_{OUT} ≤ I_{MAX} [1]		**1.20**	**1.25**	**1.30**	V
Line Regulation	3V ≤ ($V_{IN} - V_{OUT}$) ≤ 40V [3]			0.01 **0.02**	0.02 **0.05**	%/V
Load Regulation	10 mA ≤ I_{OUT} ≤ I_{MAX} [1] [3]			0.1 **0.3**	0.3 **1**	%
Thermal Regulation	20 ms Pulse			0.03	0.07	%/W
Adjustment Pin Current				**50**	**100**	µA
Adjustment Pin Current Change	10 mA ≤ I_{OUT} ≤ I_{MAX} [1] 3V ≤ ($V_{IN} - V_{OUT}$) ≤ 40V			**0.2**	**5**	µA
Temperature Stability	T_{MIN} ≤ T_J ≤ T_{MAX}			**1**		%
Minimum Load Current	($V_{IN} - V_{OUT}$) = 40V			**3.5**	**5**	mA
Current Limit	($V_{IN} - V_{OUT}$) ≤ 15V	NDS Package	**1.5**	**2.2**	**3.4**	A
		NDT, NAJ Package	**0.5**	**0.8**	**1.8**	
	($V_{IN} - V_{OUT}$) = 40V	NDS Package	0.3	0.4		A
		NDT, NAJ Package	0.15	0.20		
RMS Output Noise, % of V_{OUT}	10 Hz ≤ f ≤ 10 kHz			0.003		%

(1) I_{MAX} = 1.5A for the NDS (TO-3), NDE (TO-220), and KTT (TO-263) packages. I_{MAX} = 1.0A for the DCY (SOT-223) package. I_{MAX} = 0.5A for the NDT (TO), MDT (PFM), and NAJ (LCCC) packages. Device power dissipation (P_D) is limited by ambient temperature (T_A), device maximum junction temperature (T_J), and package thermal resistance (θ_{JA}). The maximum allowable power dissipation at any temperature is : $P_{D(MAX)} = ((T_{J(MAX)} - T_A)/\theta_{JA})$. All Min. and Max. limits are ensured to TI's Average Outgoing Quality Level (AOQL).
(2) Refer to RETS117H drawing for the LM117H, or the RETS117K for the LM117K military specifications.
(3) Regulation is measured at a constant junction temperature, using pulse testing with a low duty cycle. Changes in output voltage due to heating effects are covered under the specifications for thermal regulation.

Copyright © 2004–2011, Texas Instruments Incorporated

LM117 Electrical Characteristics[1] (continued)

Specifications with standard type face are for T_J = 25°C, and those with **boldface type** apply over **full Operating Temperature Range**. Unless otherwise specified, $V_{IN} - V_{OUT}$ = 5V, and I_{OUT} = 10 mA.

Parameter	Conditions	LM117 [2]			
		Min	Typ	Max	Units
Ripple Rejection Ratio	V_{OUT} = 10V, f = 120 Hz, C_{ADJ} = 0 µF		**65**		dB
	V_{OUT} = 10V, f = 120 Hz, C_{ADJ} = 10 µF	**66**	**80**		dB
Long-Term Stability	T_J = 125°C, 1000 hrs		0.3	1	%
Thermal Resistance, θ_{JC} Junction-to-Case	NDS (TO-3) Package		2		°C/W
	NDT (TO) Package		21		
	NAJ (LCCC) Package		12		
Thermal Resistance, θ_{JA} Junction-to-Ambient (No Heat Sink)	NDS (TO-3) Package		39		°C/W
	NDT (TO) Package		186		
	NAJ (LCCC) Package		88		

LM317A and LM317-N Electrical Characteristics[1]

Specifications with standard type face are for T_J = 25°C, and those with **boldface type** apply over **full Operating Temperature Range**. Unless otherwise specified, $V_{IN} - V_{OUT}$ = 5V, and I_{OUT} = 10 mA.

Parameter	Conditions		LM317A			LM317-N			
			Min	Typ	Max	Min	Typ	Max	Units
Reference Voltage			1.238	1.250	1.262	-	1.25	-	V
	3V ≤ ($V_{IN} - V_{OUT}$) ≤ 40V, 10 mA ≤ I_{OUT} ≤ I_{MAX} [1]		**1.225**	**1.250**	**1.270**	**1.20**	**1.25**	**1.30**	V
Line Regulation	3V ≤ ($V_{IN} - V_{OUT}$) ≤ 40V [2]			0.005 **0.01**	0.01 **0.02**		0.01 **0.02**	0.04 **0.07**	%/V
Load Regulation	10 mA ≤ I_{OUT} ≤ I_{MAX} [1] [2]			0.1 **0.3**	0.5 **1**		0.1 **0.3**	0.5 **1.5**	%
Thermal Regulation	20 ms Pulse			0.04	0.07		0.04	0.07	%/W
Adjustment Pin Current				**50**	**100**		**50**	**100**	µA
Adjustment Pin Current Change	10 mA ≤ I_{OUT} ≤ I_{MAX} [1] 3V ≤ ($V_{IN} - V_{OUT}$) ≤ 40V			**0.2**	**5**		**0.2**	**5**	µA
Temperature Stability	T_{MIN} ≤ T_J ≤ T_{MAX}			**1**			**1**		%
Minimum Load Current	($V_{IN} - V_{OUT}$) = 40V			**3.5**	**10**		**3.5**	**10**	mA
Current Limit	($V_{IN} - V_{OUT}$) ≤ 15V	NDS, KTT Packages	-	-	-	**1.5**	**2.2**	**3.4**	A
		DCY, NDE Packages	**1.5**	**2.2**	**3.4**	**1.5**	**2.2**	**3.4**	
		NDT, MDT Packages	**0.5**	**0.8**	**1.8**	**0.5**	**0.8**	**1.8**	
	($V_{IN} - V_{OUT}$) = 40V	NDS, KTT Packages	-	-		0.15	0.40		A
		DCY, NDE Packages	0.112	0.30		0.112	0.30		
		NDT, MDT Packages	0.075	0.20		0.075	0.20		
RMS Output Noise, % of V_{OUT}	10 Hz ≤ f ≤ 10 kHz			0.003			0.003		%
Ripple Rejection Ratio	V_{OUT} = 10V, f = 120 Hz, C_{ADJ} = 0 µF			**65**			**65**		dB
	V_{OUT} = 10V, f = 120 Hz, C_{ADJ} = 10 µF		**66**	**80**		**66**	**80**		dB
Long-Term Stability	T_J = 125°C, 1000 hrs			0.3	1		0.3	1	%

(1) I_{MAX} = 1.5A for the NDS (TO-3), NDE (TO-220), and KTT (TO-263) packages. I_{MAX} = 1.0A for the DCY (SOT-223) package. I_{MAX} = 0.5A for the NDT (TO), MDT (PFM), and NAJ (LCCC) packages. Device power dissipation (P_D) is limited by ambient temperature (T_A), device maximum junction temperature (T_J), and package thermal resistance (θ_{JA}). The maximum allowable power dissipation at any temperature is : $P_{D(MAX)} = ((T_{J(MAX)} - T_A)/\theta_{JA})$. All Min. and Max. limits are ensured to TI's Average Outgoing Quality Level (AOQL).
(2) Regulation is measured at a constant junction temperature, using pulse testing with a low duty cycle. Changes in output voltage due to heating effects are covered under the specifications for thermal regulation.

Copyright © 2004–2011, Texas Instruments Incorporated

LM317A and LM317-N Electrical Characteristics[1] (continued)

Specifications with standard type face are for T_J = 25°C, and those with **boldface type** apply over **full Operating Temperature Range**. Unless otherwise specified, $V_{IN} - V_{OUT}$ = 5V, and I_{OUT} = 10 mA.

Parameter	Conditions	LM317A			LM317-N			
		Min	Typ	Max	Min	Typ	Max	Units
Thermal Resistance, θ_{JC} Junction-to-Case	NDS (TO-3) Package		-			2		°C/W
	NDE (TO-220) Package		4			4		
	KTT (TO-263) Package		-			4		
	DCY (SOT-223) Package		23.5			23.5		
	NDT (TO) Package		21			21		
	MDT (PFM) Package		12			12		
Thermal Resistance, θ_{JA} Junction-to-Ambient (No Heat Sink)	NDS (TO-3) Package		-			39		°C/W
	NDE (TO-220) Package		50			50		
	KTT (TO-263) Package [3]		-			50		
	DCY (SOT-223) Package [3]		140			140		
	NDT (TO) Package		186			186		
	MDT (PFM) Package [3]		103			103		

(3) When surface mount packages are used (TO-263, SOT-223, PFM), the junction to ambient thermal resistance can be reduced by increasing the PC board copper area that is thermally connected to the package. See the Applications Hints section for heatsink techniques.

Copyright © 2004–2011, Texas Instruments Incorporated

Typical Performance Characteristics

Output Capacitor = 0 μF unless otherwise noted

Load Regulation

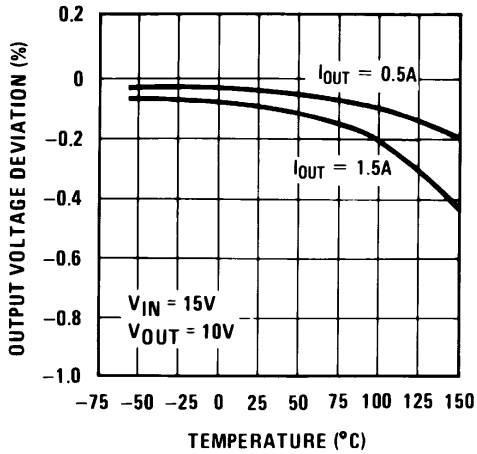

Figure 12.

Current Limit

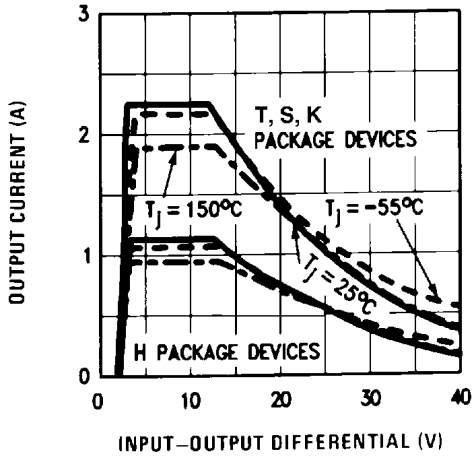

Figure 13.

Adjustment Current

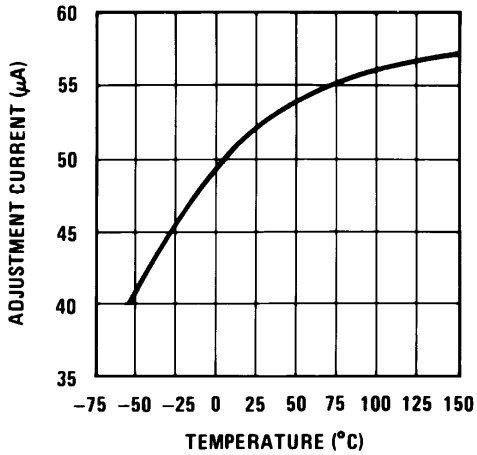

Figure 14.

Dropout Voltage

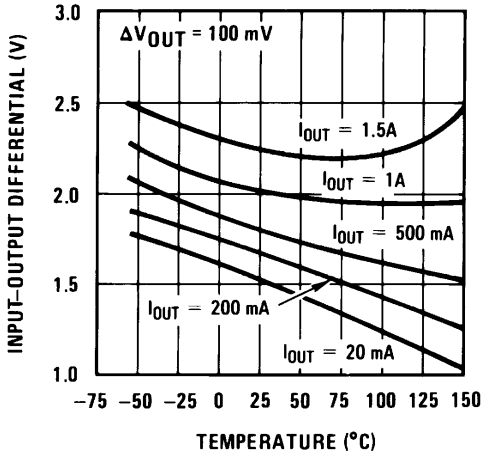

Figure 15.

V_{OUT} vs V_{IN}, V_{OUT} = V_{REF}

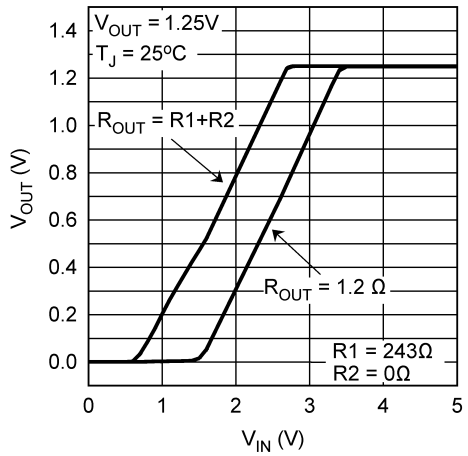

Figure 16.

V_{OUT} vs V_{IN}, V_{OUT} = 5V

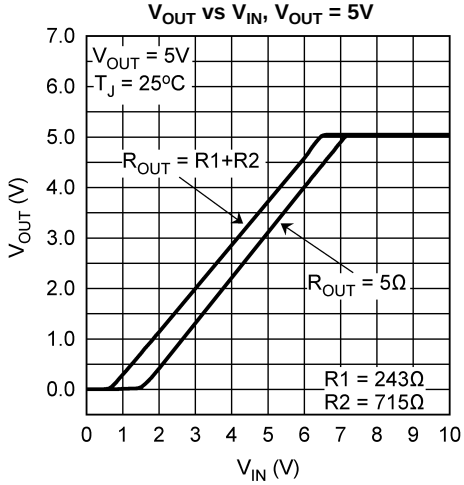

Figure 17.

Typical Performance Characteristics (continued)

Output Capacitor = 0 µF unless otherwise noted

Temperature Stability

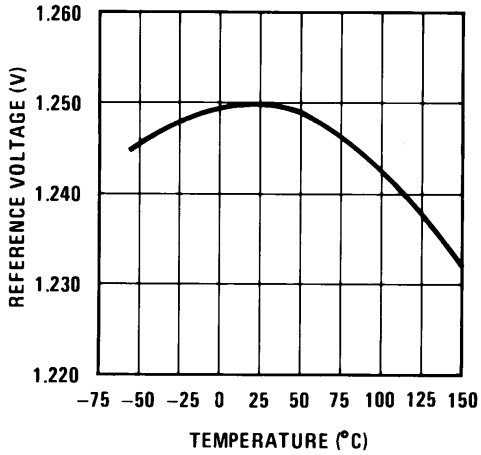

Figure 18.

Minimum Operating Current

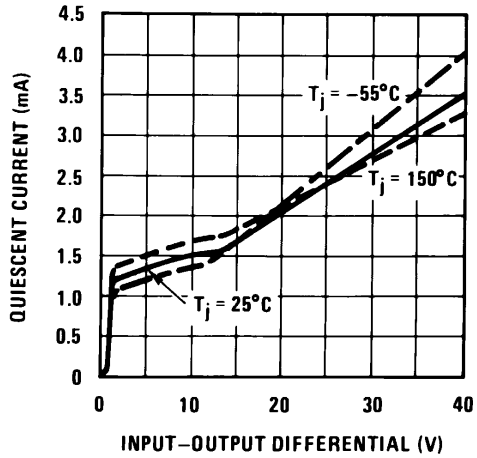

Figure 19.

Ripple Rejection

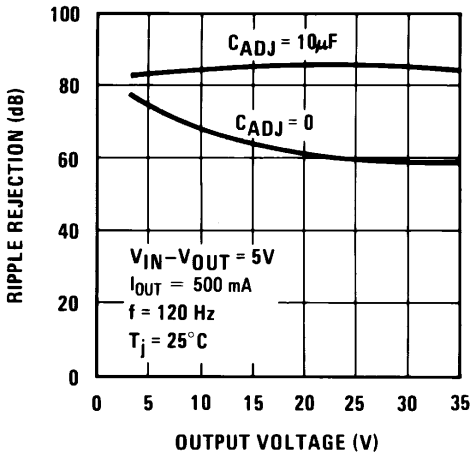

Figure 20.

Ripple Rejection

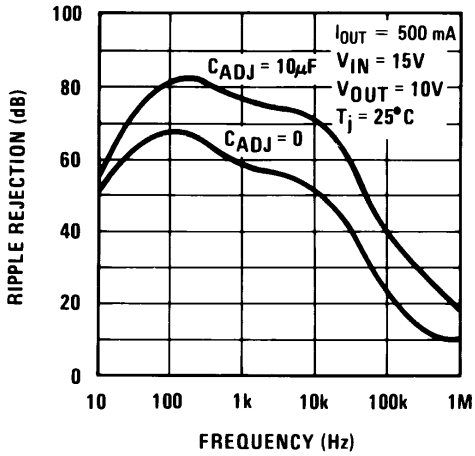

Figure 21.

Ripple Rejection

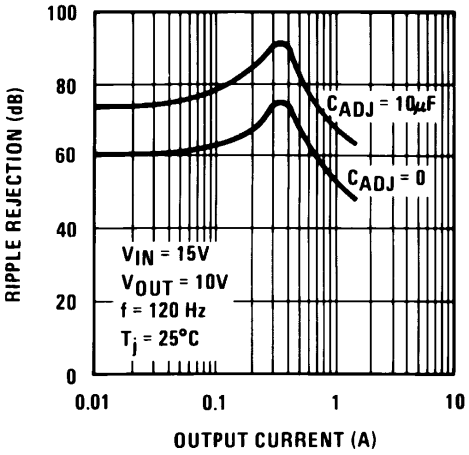

Figure 22.

Output Impedance

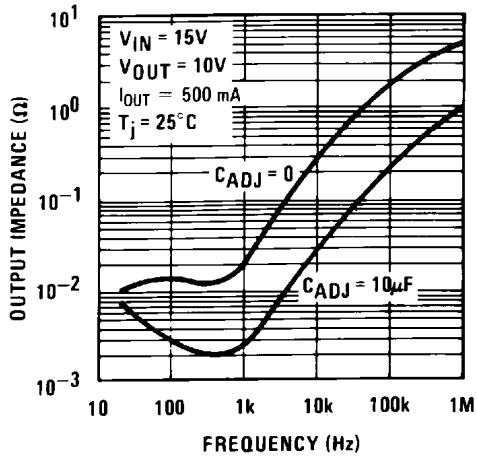

Figure 23.

Copyright © 2004–2011, Texas Instruments Incorporated

Typical Performance Characteristics (continued)

Output Capacitor = 0 μF unless otherwise noted

Line Transient Response

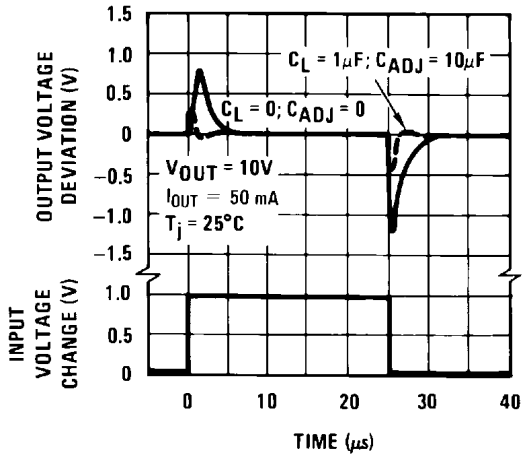

Figure 24.

Load Transient Response

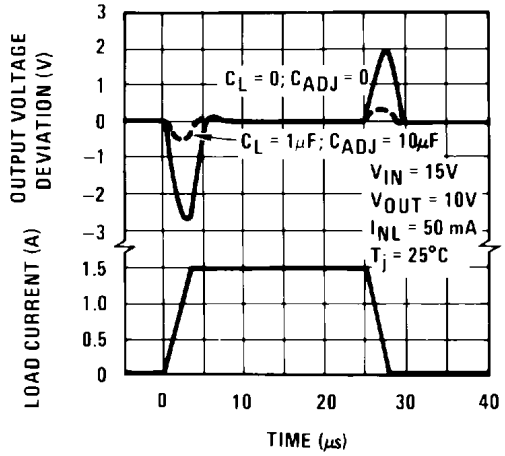

Figure 25.

APPLICATION HINTS

In operation, the LM117 develops a nominal 1.25V reference voltage, V_{REF}, between the output and adjustment terminal. The reference voltage is impressed across program resistor R1 and, since the voltage is constant, a constant current I_1 then flows through the output set resistor R2, giving an output voltage of

$$V_{OUT} = V_{REF}\left(1 + \frac{R2}{R1}\right) + I_{ADJ}R2 \tag{1}$$

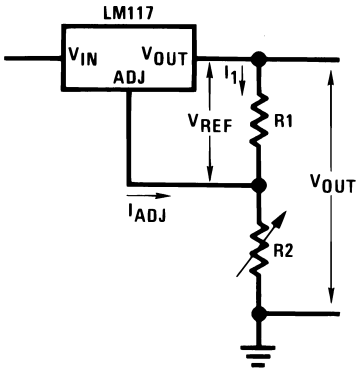

Since the 100μA current from the adjustment terminal represents an error term, the LM117 was designed to minimize I_{ADJ} and make it very constant with line and load changes. To do this, all quiescent operating current is returned to the output establishing a minimum load current requirement. If there is insufficient load on the output, the output will rise.

External Capacitors

An input bypass capacitor is recommended. A 0.1μF disc or 1μF solid tantalum on the input is suitable input bypassing for almost all applications. The device is more sensitive to the absence of input bypassing when adjustment or output capacitors are used but the above values will eliminate the possibility of problems.

The adjustment terminal can be bypassed to ground on the LM117 to improve ripple rejection. This bypass capacitor prevents ripple from being amplified as the output voltage is increased. With a 10 μF bypass capacitor 80dB ripple rejection is obtainable at any output level. Increases over 10 μF do not appreciably improve the ripple rejection at frequencies above 120Hz. If the bypass capacitor is used, it is sometimes necessary to include protection diodes to prevent the capacitor from discharging through internal low current paths and damaging the device.

Copyright © 2004–2011, Texas Instruments Incorporated

In general, the best type of capacitors to use is solid tantalum. Solid tantalum capacitors have low impedance even at high frequencies. Depending upon capacitor construction, it takes about 25 µF in aluminum electrolytic to equal 1µF solid tantalum at high frequencies. Ceramic capacitors are also good at high frequencies; but some types have a large decrease in capacitance at frequencies around 0.5 MHz. For this reason, 0.01 µF disc may seem to work better than a 0.1 µF disc as a bypass.

Although the LM117 is stable with no output capacitors, like any feedback circuit, certain values of external capacitance can cause excessive ringing. This occurs with values between 500 pF and 5000 pF. A 1 µF solid tantalum (or 25 µF aluminum electrolytic) on the output swamps this effect and insures stability. Any increase of the load capacitance larger than 10 µF will merely improve the loop stability and output impedance.

Load Regulation

The LM117 is capable of providing extremely good load regulation but a few precautions are needed to obtain maximum performance. The current set resistor connected between the adjustment terminal and the output terminal (usually 240Ω) should be tied directly to the output (case) of the regulator rather than near the load. This eliminates line drops from appearing effectively in series with the reference and degrading regulation. For example, a 15V regulator with 0.05Ω resistance between the regulator and load will have a load regulation due to line resistance of 0.05Ω × I_L. If the set resistor is connected near the load the effective line resistance will be 0.05Ω (1 + R2/R1) or in this case, 11.5 times worse.

Figure 26 shows the effect of resistance between the regulator and 240Ω set resistor.

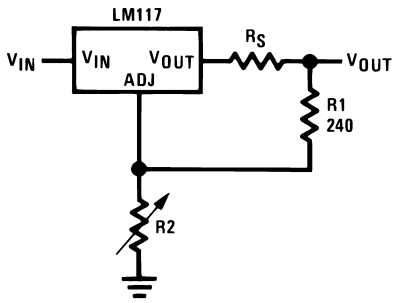

Figure 26. Regulator with Line Resistance in Output Lead

With the TO-3 package, it is easy to minimize the resistance from the case to the set resistor, by using two separate leads to the case. However, with the TO package, care should be taken to minimize the wire length of the output lead. The ground of R2 can be returned near the ground of the load to provide remote ground sensing and improve load regulation.

Protection Diodes

When external capacitors are used with any IC regulator it is sometimes necessary to add protection diodes to prevent the capacitors from discharging through low current points into the regulator. Most 10 µF capacitors have low enough internal series resistance to deliver 20A spikes when shorted. Although the surge is short, there is enough energy to damage parts of the IC.

When an output capacitor is connected to a regulator and the input is shorted, the output capacitor will discharge into the output of the regulator. The discharge current depends on the value of the capacitor, the output voltage of the regulator, and the rate of decrease of V_{IN}. In the LM117, this discharge path is through a large junction that is able to sustain 15A surge with no problem. This is not true of other types of positive regulators. For output capacitors of 25 µF or less, there is no need to use diodes.

The bypass capacitor on the adjustment terminal can discharge through a low current junction. Discharge occurs when *either* the input, or the output, is shorted. Internal to the LM117 is a 50Ω resistor which limits the peak discharge current. No protection is needed for output voltages of 25V or less and 10 µF capacitance. *Figure 27* shows an LM117 with protection diodes included for use with outputs greater than 25V and high values of output capacitance.

Copyright © 2004–2011, Texas Instruments Incorporated

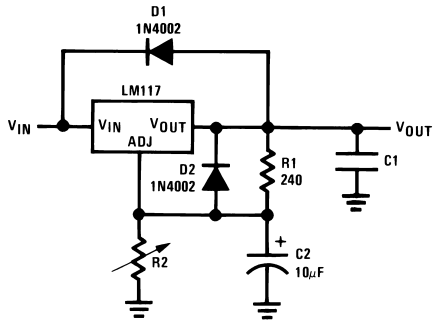

$$V_{OUT} = 1.25V\left(1 + \frac{R2}{R1}\right) + I_{ADJ}R2$$

D1 protects against C1
D2 protects against C2

Figure 27. Regulator with Protection Diodes

Heatsink Requirements

The LM317-N regulators have internal thermal shutdown to protect the device from over-heating. Under all operating conditions, the junction temperature of the LM317-N should not exceed the rated maximum junction temperature (T_J) of 150°C for the LM117, or 125°C for the LM317A and LM317-N. A heatsink may be required depending on the maximum device power dissipation and the maximum ambient temperature of the application. To determine if a heatsink is needed, the power dissipated by the regulator, P_D, must be calculated:

$$P_D = ((V_{IN} - V_{OUT}) \times I_L) + (V_{IN} \times I_G) \quad (2)$$

Figure 28 shows the voltage and currents which are present in the circuit.

The next parameter which must be calculated is the maximum allowable temperature rise, $T_{R(MAX)}$:

$$T_{R(MAX)} = T_{J(MAX)} - T_{A(MAX)} \quad (3)$$

where $T_{J(MAX)}$ is the maximum allowable junction temperature (150°C for the LM117, or 125°C for the LM317A/LM317-N), and $T_{A(MAX)}$ is the maximum ambient temperature which will be encountered in the application.

Using the calculated values for $T_{R(MAX)}$ and P_D, the maximum allowable value for the junction-to-ambient thermal resistance (θ_{JA}) can be calculated:

$$\theta_{JA} = (T_{R(MAX)} / P_D) \quad (4)$$

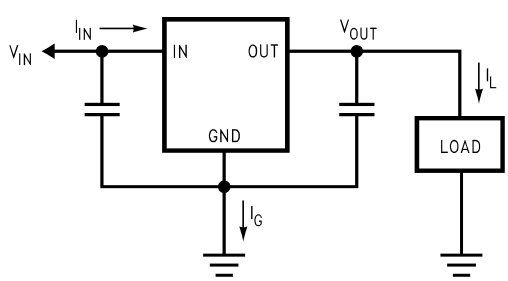

Figure 28. Power Dissipation Diagram

If the calculated maximum allowable thermal resistance is higher than the actual package rating, then no additional work is needed. If the calculated maximum allowable thermal resistance is lower than the actual package rating either the power dissipation (P_D) needs to be reduced, the maximum ambient temperature $T_{A(MAX)}$ needs to be reduced, the thermal resistance (θ_{JA}) must be lowered by adding a heatsink, or some combination of these.

If a heatsink is needed, the value can be calculated from the formula:

$$\theta_{HA} \leq (\theta_{JA} - (\theta_{CH} + \theta_{JC})) \quad (5)$$

Copyright © 2004–2011, Texas Instruments Incorporated

where (θ_{CH} is the thermal resistance of the contact area between the device case and the heatsink surface, and θ_{JC} is thermal resistance from the junction of the die to surface of the package case.

When a value for $\theta_{(H-A)}$ is found using the equation shown, a heatsink must be selected that has a value that is less than, or equal to, this number.

The $\theta_{(H-A)}$ rating is specified numerically by the heatsink manufacturer in the catalog, or shown in a curve that plots temperature rise vs power dissipation for the heatsink.

Heatsinking Surface Mount Packages

The TO-263 (KTT), SOT-223 (DCY) and PFM (MDT) packages use a copper plane on the PCB and the PCB itself as a heatsink. To optimize the heat sinking ability of the plane and PCB, solder the tab of the package to the plane.

Heatsinking the SOT-223 Package

Figure 29 and Figure 30 show the information for the SOT-223 package. Figure 30 assumes a $\theta_{(J-A)}$ of 74°C/W for 1 ounce copper and 51°C/W for 2 ounce copper and a maximum junction temperature of 125°C. Please see AN-1028 (literature number SNVA036) for thermal enhancement techniques to be used with SOT-223 and PFM packages.

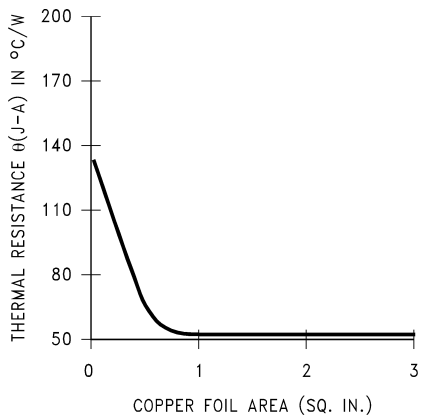

Figure 29. $\theta_{(J-A)}$ vs Copper (2 ounce) Area for the SOT-223 Package

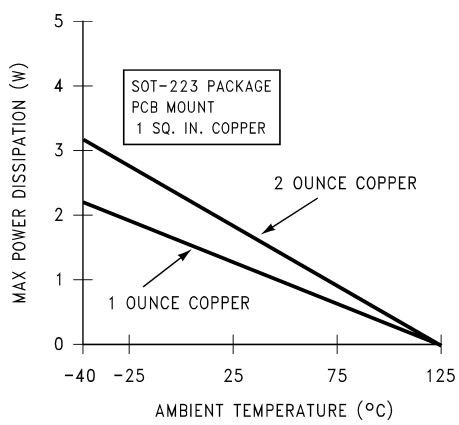

Figure 30. Maximum Power Dissipation vs T_{AMB} for the SOT-223 Package

Heatsinking the TO-263 Package

Figure 31 shows for the TO-263 the measured values of $\theta_{(J-A)}$ for different copper area sizes using a typical PCB with 1 ounce copper and no solder mask over the copper area used for heatsinking.

Copyright © 2004–2011, Texas Instruments Incorporated

As shown in Figure 31, increasing the copper area beyond 1 square inch produces very little improvement. It should also be observed that the minimum value of $\theta_{(J-A)}$ for the TO-263 package mounted to a PCB is 32°C/W.

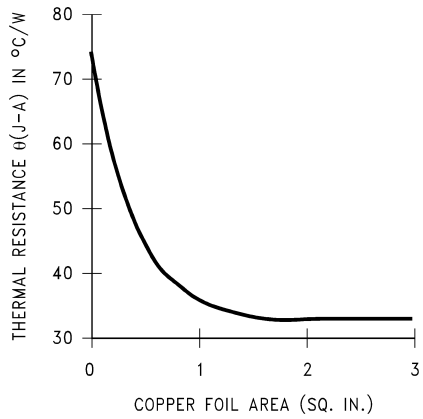

Figure 31. $\theta_{(J-A)}$ vs Copper (1 ounce) Area for the TO-263 Package

As a design aid, Figure 32 shows the maximum allowable power dissipation compared to ambient temperature for the TO-263 device (assuming $\theta_{(J-A)}$ is 35°C/W and the maximum junction temperature is 125°C).

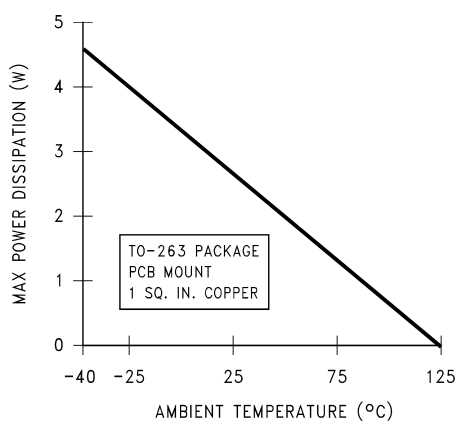

Figure 32. Maximum Power Dissipation vs T_{AMB} for the TO-263 Package

Heatsinking the PFM Package

If the maximum allowable value for θ_{JA} is found to be ≥103°C/W (Typical Rated Value) for PFM package, no heatsink is needed since the package alone will dissipate enough heat to satisfy these requirements. If the calculated value for θ_{JA} falls below these limits, a heatsink is required.

As a design aid, Table 1 shows the value of the θ_{JA} of PFM for different heatsink area. The copper patterns that we used to measure these θ_{JA}s are shown in Figure 37. Figure 33 reflects the same test results as what are in Table 1.

Figure 34 shows the maximum allowable power dissipation vs. ambient temperature for the PFM device. Figure 35 shows the maximum allowable power dissipation vs. copper area (in^2) for the PFM device. Please see AN-1028 (literature number SNVA036) for thermal enhancement techniques to be used with SOT-223 and PFM packages.

Table 1. θ_{JA} Different Heatsink Area

Layout	Copper Area		Thermal Resistance (θ_{JA}°C/W) PFM
	Top Side (in^2)(1)	Bottom Side (in^2)	
1	0.0123	0	103
2	0.066	0	87
3	0.3	0	60
4	0.53	0	54
5	0.76	0	52
6	1.0	0	47
7	0.066	0.2	84
8	0.066	0.4	70
9	0.066	0.6	63
10	0.066	0.8	57
11	0.066	1.0	57
12	0.066	0.066	89
13	0.175	0.175	72
14	0.284	0.284	61
15	0.392	0.392	55
16	0.5	0.5	53

(1) Tab of device attached to topside of copper.

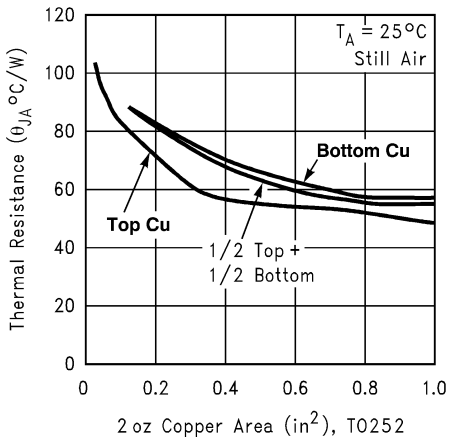

Figure 33. θ_{JA} vs 2oz Copper Area for PFM

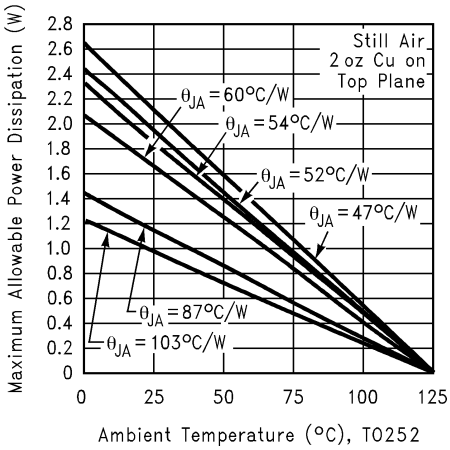

Figure 34. Maximum Allowable Power Dissipation vs. Ambient Temperature for PFM

Copyright © 2004–2011, Texas Instruments Incorporated

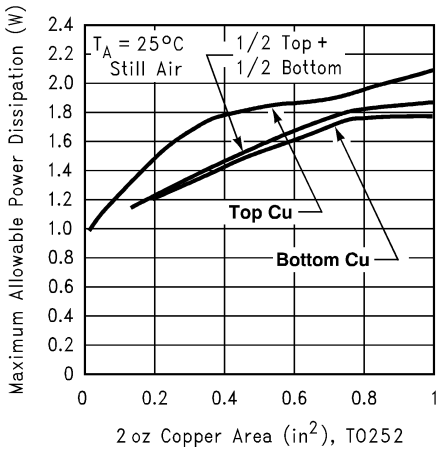

Figure 35. Maximum Allowable Power Dissipation vs. 2oz Copper Area for PFM

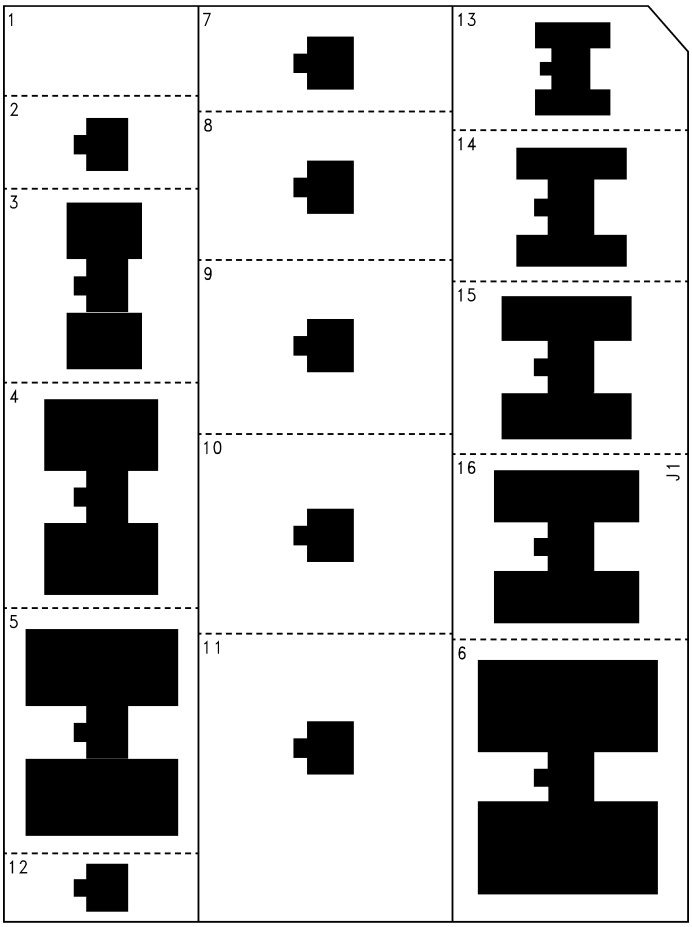

Figure 36. Top View of the Thermal Test Pattern in Actual Scale

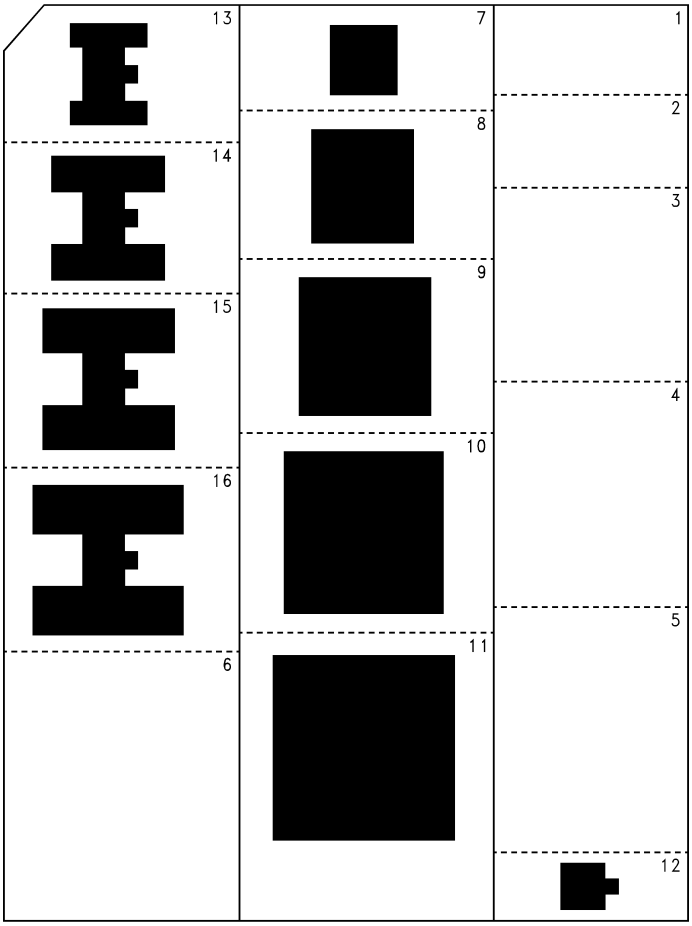

Figure 37. Bottom View of the Thermal Test Pattern in Actual Scale

Schematic Diagram

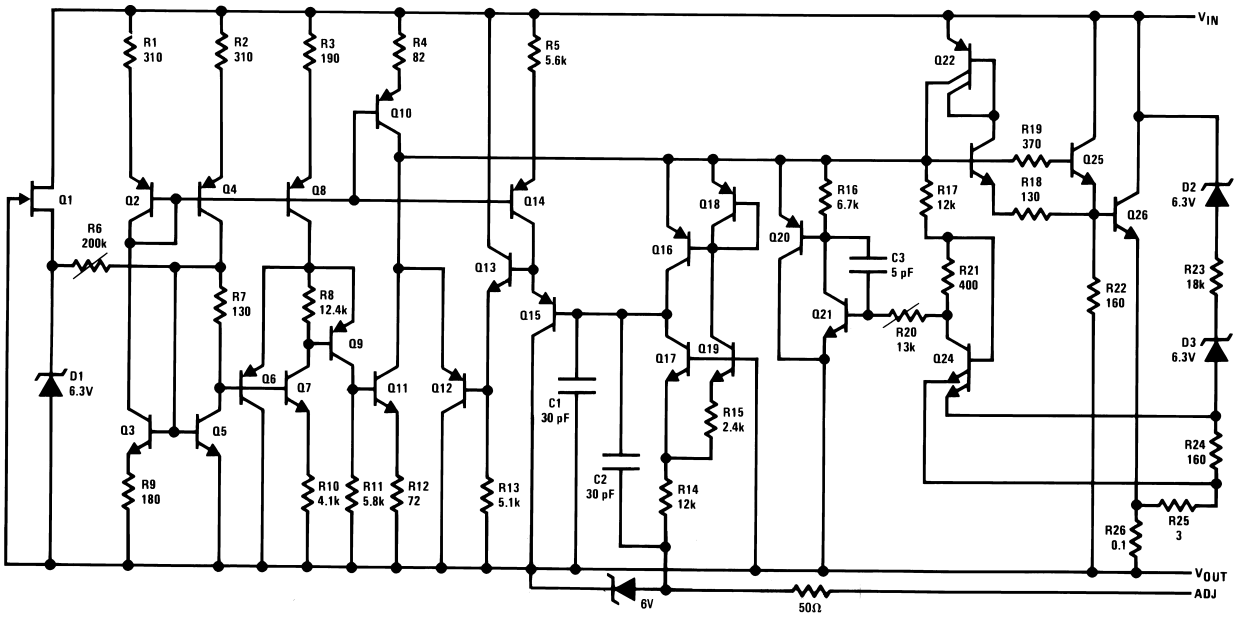

Copyright © 2004–2011, Texas Instruments Incorporated

Typical Applications

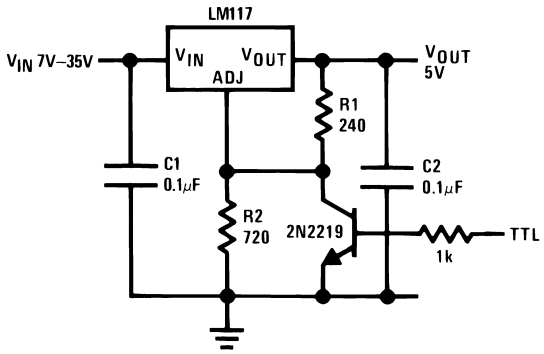

Note: Min. output ≅ 1.2V

Figure 38. 5V Logic Regulator with Electronic Shutdown

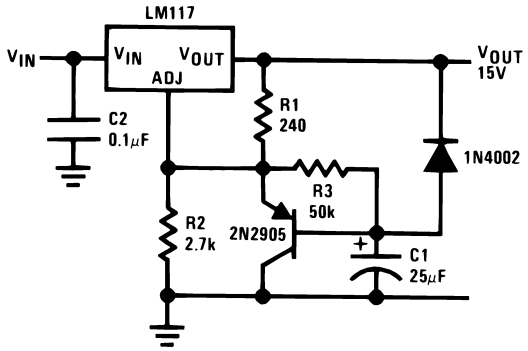

Figure 39. Slow Turn-On 15V Regulator

Figure 40.

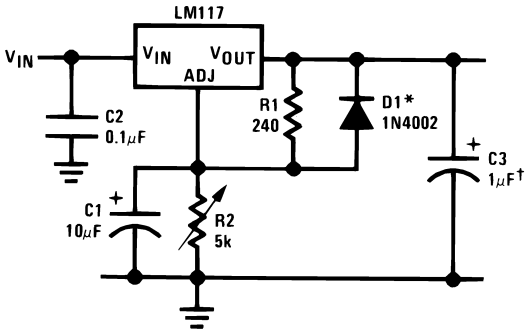

†Solid tantalum
*Discharges C1 if output is shorted to ground

Figure 41. Adjustable Regulator with Improved Ripple Rejection

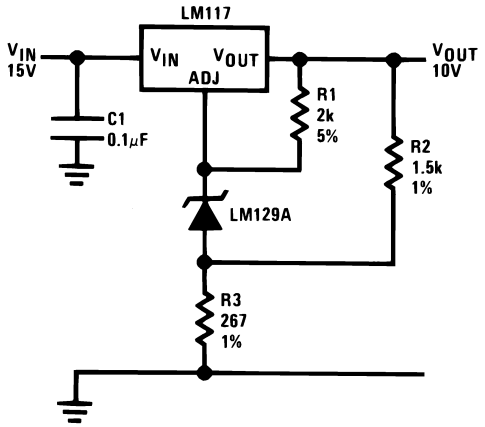

Figure 42. High Stability 10V Regulator

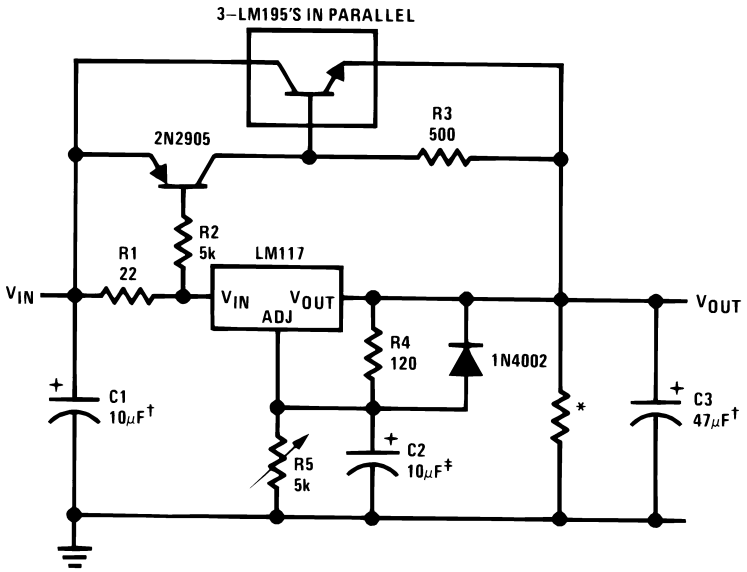

‡Optional—improves ripple rejection
†Solid tantalum
*Minimum load current = 30 mA

Figure 43. High Current Adjustable Regulator

Copyright © 2004–2011, Texas Instruments Incorporated

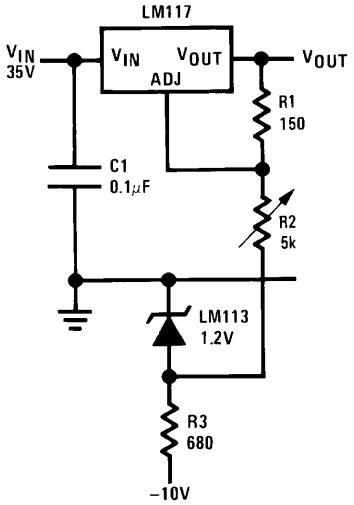

Full output current not available at high input-output voltages

Figure 44. 0 to 30V Regulator

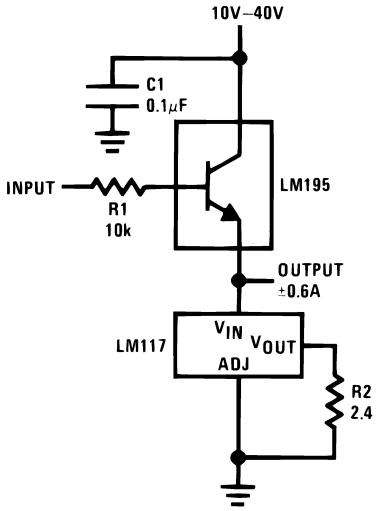

Figure 45. Power Follower

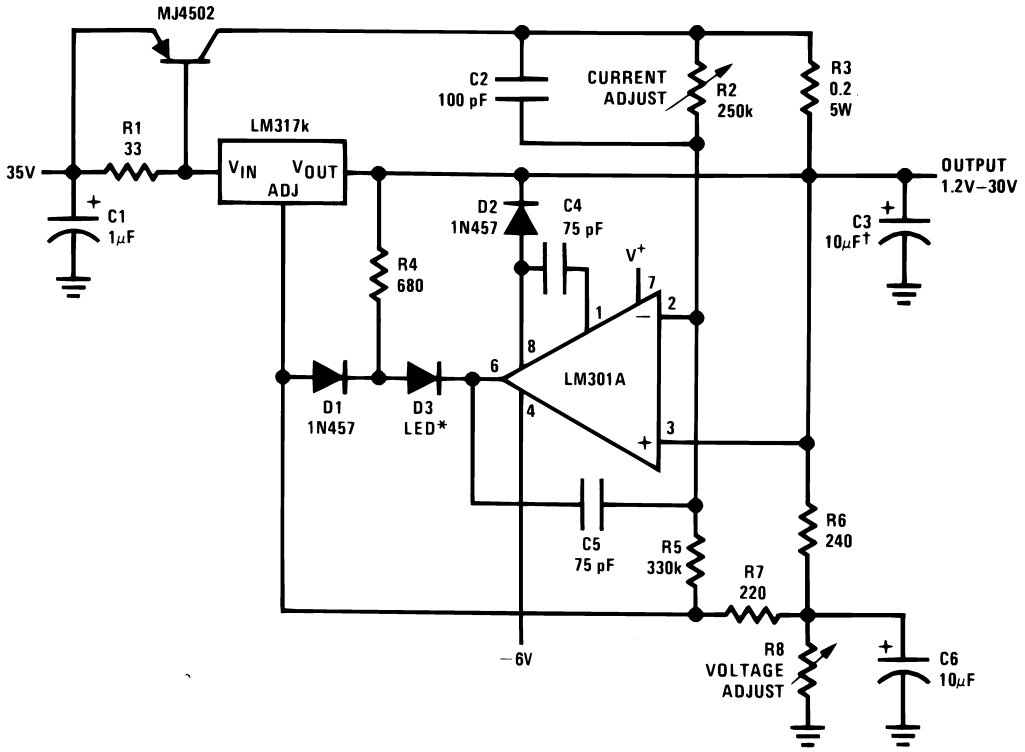

†Solid tantalum
*Lights in constant current mode

Figure 46. 5A Constant Voltage/Constant Current Regulator

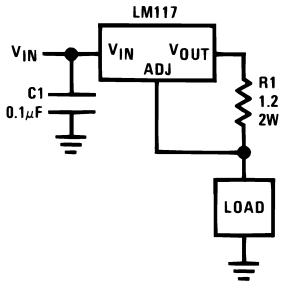

Figure 47. 1A Current Regulator

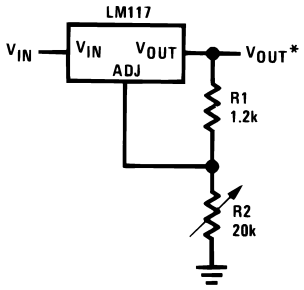

*Minimum load current ≅ 4 mA

Figure 48. 1.2V–20V Regulator with Minimum Program Current

Copyright © 2004–2011, Texas Instruments Incorporated

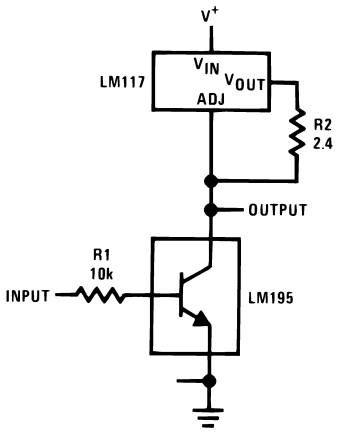

Figure 49. High Gain Amplifier

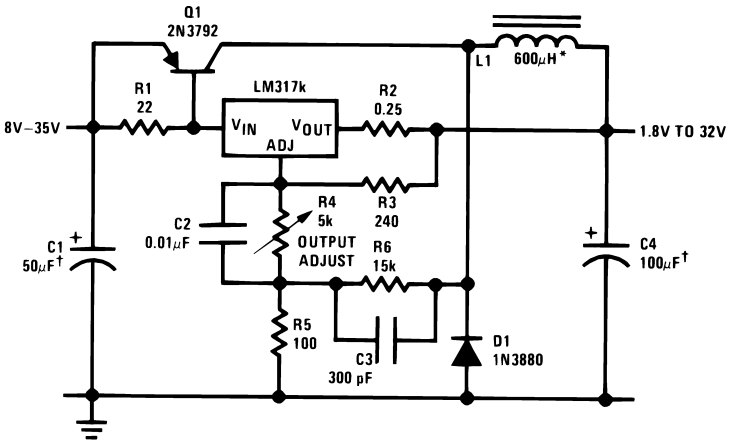

†Solid tantalum
*Core—Arnold A-254168-2 60 turns

Figure 50. Low Cost 3A Switching Regulator

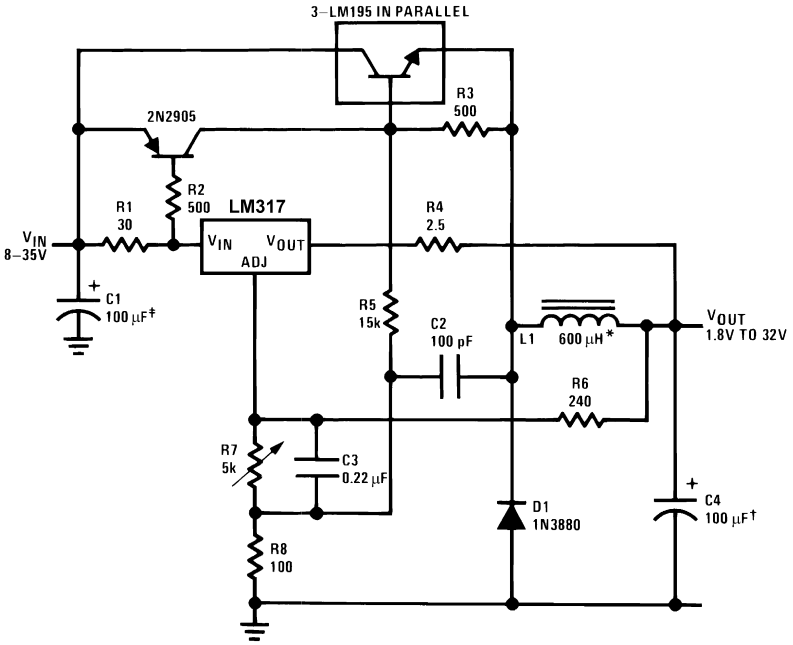

†Solid tantalum
*Core—Arnold A-254168-2 60 turns

Figure 51. 4A Switching Regulator with Overload Protection

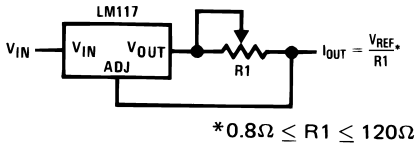

Figure 52. Precision Current Limiter

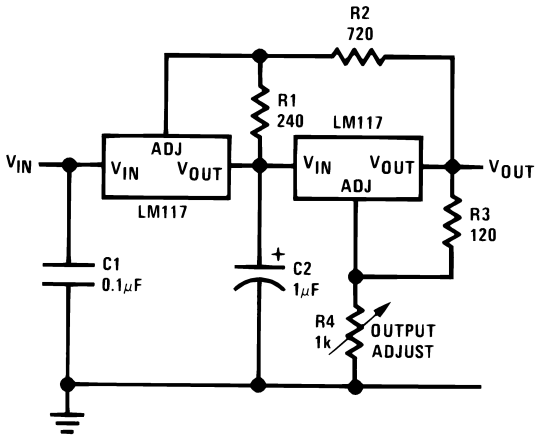

Figure 53. Tracking Preregulator

Copyright © 2004–2011, Texas Instruments Incorporated

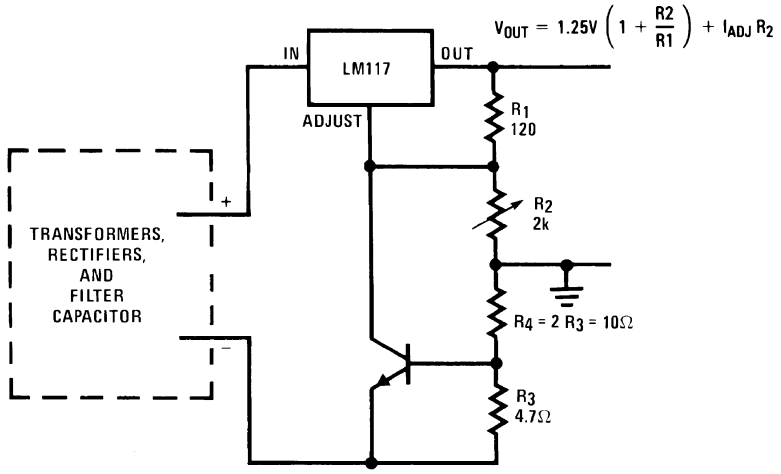

– Short circuit current is approximately $\frac{600\ mV}{R3}$, or 120 mA

(Compared to LM117's higher current limit)
—At 50 mA output only ¾ volt of drop occurs in R_3 and R_4

Figure 54. Current Limited Voltage Regulator

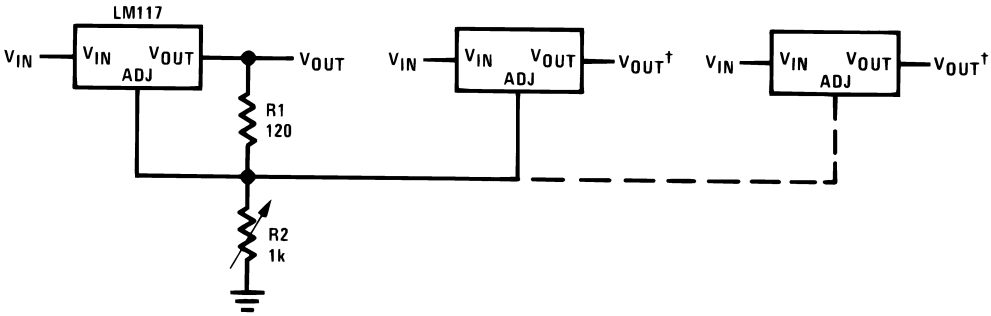

Note: All outputs within ±100 mV
†Minimum load—10 mA

Figure 55. Adjusting Multiple On-Card Regulators with Single Control

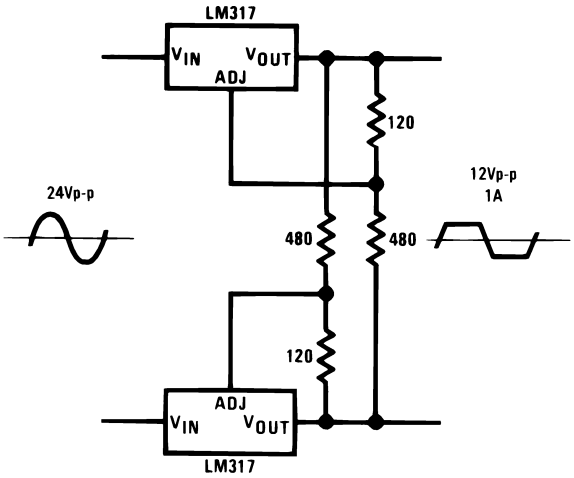

Figure 56. AC Voltage Regulator

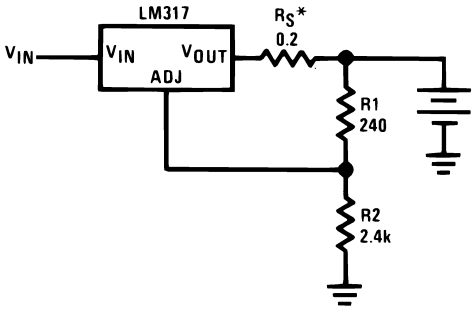

*R_S—sets output impedance of charger: $Z_{OUT} = R_S\left(1 + \frac{R2}{R1}\right)$

Use of R_S allows low charging rates with fully charged battery.

Figure 57. 12V Battery Charger

Figure 58.

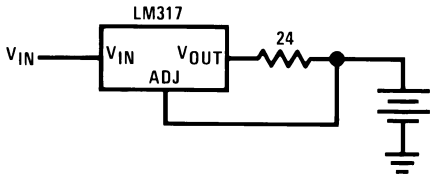

Figure 59. 50mA Constant Current Battery Charger

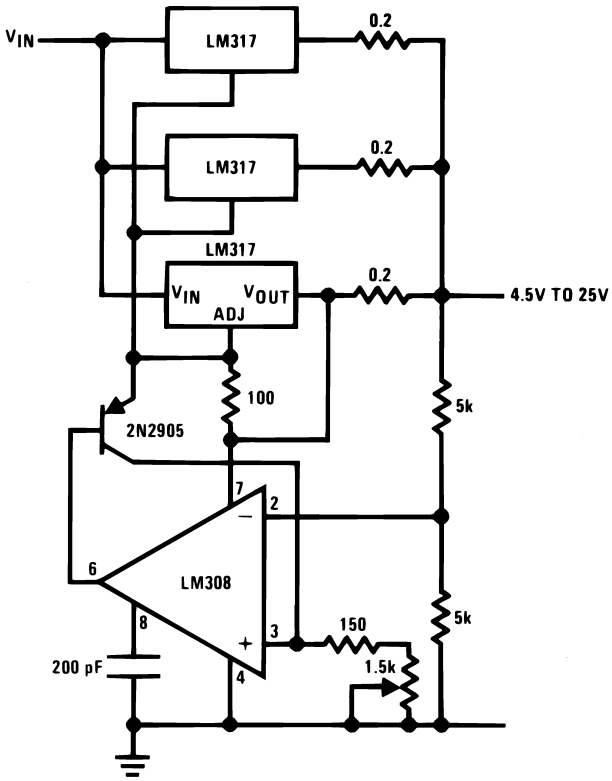

Figure 60. Adjustable 4A Regulator

Copyright © 2004–2011, Texas Instruments Incorporated

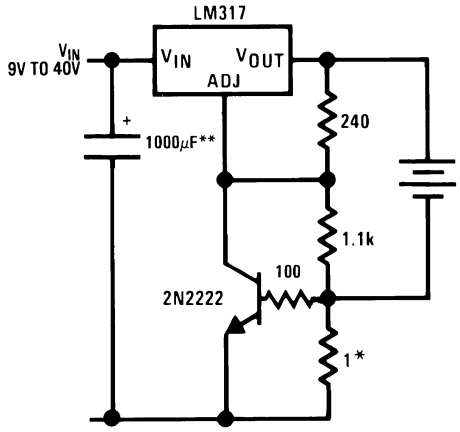

*Sets peak current (0.6A for 1Ω)
**The 1000μF is recommended to filter out input transients

Figure 61. Current Limited 6V Charger

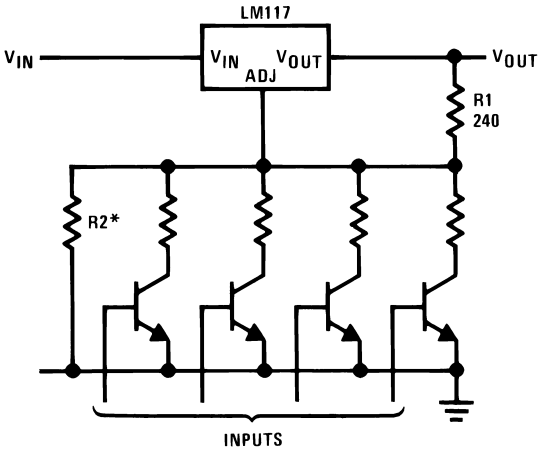

*Sets maximum V_{OUT}

Figure 62. Digitally Selected Outputs

PACKAGING INFORMATION

Orderable Device	Status (1)	Package Type	Package Drawing	Pins	Package Qty	Eco Plan (2)	Lead/Ball Finish	MSL Peak Temp (3)	Op Temp (°C)	Top-Side Markings (4)	Samples
LM117H	ACTIVE	TO	NDT	3	500	Green (RoHS & no Sb/Br)	POST-PLATE	Level-1-NA-UNLIM	-55 to 125	LM117HP+	Samples
LM117H/NOPB	ACTIVE	TO	NDT	3	500	Green (RoHS & no Sb/Br)	POST-PLATE	Level-1-NA-UNLIM	-55 to 125	LM117HP+	Samples
LM117K	ACTIVE	TO-3	NDS	2	50	TBD	Call TI	Call TI	-55 to 125	LM117K STEELP+	Samples
LM117K STEEL	ACTIVE	TO-3	NDS	2	50	TBD	Call TI	Call TI	-55 to 125	LM117K STEELP+	Samples
LM117K STEEL/NOPB	ACTIVE	TO-3	NDS	2	50	Green (RoHS & no Sb/Br)	POST-PLATE	Level-1-NA-UNLIM	-55 to 125	LM117K STEELP+	Samples
LM317AEMP	ACTIVE	SOT-223	DCY	4	1000	TBD	Call TI	Call TI	-40 to 125	N07A	Samples
LM317AEMP/NOPB	ACTIVE	SOT-223	DCY	4	1000	Green (RoHS & no Sb/Br)	CU SN	Level-1-260C-UNLIM	-40 to 125	N07A	Samples
LM317AEMPX	ACTIVE	SOT-223	DCY	4	2000	TBD	Call TI	Call TI		N07A	Samples
LM317AEMPX/NOPB	ACTIVE	SOT-223	DCY	4	2000	Green (RoHS & no Sb/Br)	CU SN	Level-1-260C-UNLIM	-40 to 125	N07A	Samples
LM317AH	ACTIVE	TO	NDT	3	500	Green (RoHS & no Sb/Br)	POST-PLATE	Level-1-NA-UNLIM	-40 to 125	LM317AHP+	Samples
LM317AH/NOPB	ACTIVE	TO	NDT	3	500	Green (RoHS & no Sb/Br)	POST-PLATE	Level-1-NA-UNLIM	-40 to 125	LM317AHP+	Samples
LM317AMDT	ACTIVE	PFM	NDP	3	75	TBD	Call TI	Call TI	-40 to 125	LM317 AMDT	Samples
LM317AMDT/NOPB	ACTIVE	PFM	NDP	3	75	Green (RoHS & no Sb/Br)	CU SN	Level-2-260C-1 YEAR	-40 to 125	LM317 AMDT	Samples
LM317AMDTX	ACTIVE	PFM	NDP	3	2500	TBD	Call TI	Call TI	-40 to 125	LM317 AMDT	Samples
LM317AMDTX/NOPB	ACTIVE	PFM	NDP	3	2500	Green (RoHS & no Sb/Br)	CU SN	Level-2-260C-1 YEAR	-40 to 125	LM317 AMDT	Samples
LM317AT	ACTIVE	TO-220	NDE	3	45	TBD	Call TI	Call TI	-40 to 125	LM317AT P+	Samples
LM317AT/NOPB	ACTIVE	TO-220	NDE	3	45	Pb-Free (RoHS Exempt)	CU SN	Level-1-NA-UNLIM	-40 to 125	LM317AT P+	Samples
LM317EMP	ACTIVE	SOT-223	DCY	4	1000	TBD	Call TI	Call TI	0 to 125	N01A	Samples

Orderable Device	Status (1)	Package Type	Package Drawing	Pins	Package Qty	Eco Plan (2)	Lead/Ball Finish	MSL Peak Temp (3)	Op Temp (°C)	Top-Side Markings (4)	Samples
LM317EMP/NOPB	ACTIVE	SOT-223	DCY	4	1000	Green (RoHS & no Sb/Br)	CU SN	Level-1-260C-UNLIM	0 to 125	N01A	Samples
LM317EMPX/NOPB	ACTIVE	SOT-223	DCY	4	2000	Green (RoHS & no Sb/Br)	CU SN	Level-1-260C-UNLIM	0 to 125	N01A	Samples
LM317H	ACTIVE	TO	NDT	3	500	Green (RoHS & no Sb/Br)	POST-PLATE	Level-1-NA-UNLIM	0 to 125	LM317HP+	Samples
LM317H/NOPB	ACTIVE	TO	NDT	3	500	Green (RoHS & no Sb/Br)	POST-PLATE	Level-1-NA-UNLIM	0 to 125	LM317HP+	Samples
LM317K STEEL	ACTIVE	TO-3	NDS	2	50	TBD	Call TI	Call TI	0 to 125	LM317K STEELP+	Samples
LM317K STEEL/NOPB	ACTIVE	TO-3	NDS	2	50	Green (RoHS & no Sb/Br)	POST-PLATE	Level-1-NA-UNLIM	0 to 125	LM317K STEELP+	Samples
LM317MDT/NOPB	ACTIVE	PFM	NDP	3	75	Green (RoHS & no Sb/Br)	CU SN	Level-2-260C-1 YEAR	0 to 125	LM317 MDT	Samples
LM317MDTX/NOPB	ACTIVE	PFM	NDP	3	2500	Green (RoHS & no Sb/Br)	CU SN	Level-2-260C-1 YEAR	0 to 125	LM317 MDT	Samples
LM317S/NOPB	ACTIVE	DDPAK/ TO-263	KTT	3	45	Pb-Free (RoHS Exempt)	CU SN	Level-3-245C-168 HR	0 to 125	LM317S P+	Samples
LM317SX/NOPB	ACTIVE	DDPAK/ TO-263	KTT	3	500	Pb-Free (RoHS Exempt)	CU SN	Level-3-245C-168 HR	0 to 125	LM317S P+	Samples
LM317T	ACTIVE	TO-220	NDE	3	45	TBD	Call TI	Call TI		LM317T P+	Samples
LM317T/LF01	ACTIVE	TO-220	NDG	3	45	Pb-Free (RoHS Exempt)	CU SN	Level-4-260C-72 HR		LM317T P+	Samples
LM317T/NOPB	ACTIVE	TO-220	NDE	3	45	Green (RoHS & no Sb/Br)	CU SN	Level-1-NA-UNLIM	0 to 125	LM317T P+	Samples

(1) The marketing status values are defined as follows:
ACTIVE: Product device recommended for new designs.
LIFEBUY: TI has announced that the device will be discontinued, and a lifetime-buy period is in effect.
NRND: Not recommended for new designs. Device is in production to support existing customers, but TI does not recommend using this part in a new design.
PREVIEW: Device has been announced but is not in production. Samples may or may not be available.
OBSOLETE: TI has discontinued the production of the device.

(2) Eco Plan - The planned eco-friendly classification: Pb-Free (RoHS), Pb-Free (RoHS Exempt), or Green (RoHS & no Sb/Br) - please check http://www.ti.com/productcontent for the latest availability information and additional product content details.
TBD: The Pb-Free/Green conversion plan has not been defined.

Pb-Free (RoHS): TI's terms "Lead-Free" or "Pb-Free" mean semiconductor products that are compatible with the current RoHS requirements for all 6 substances, including the requirement that lead not exceed 0.1% by weight in homogeneous materials. Where designed to be soldered at high temperatures, TI Pb-Free products are suitable for use in specified lead-free processes.
Pb-Free (RoHS Exempt): This component has a RoHS exemption for either 1) lead-based flip-chip solder bumps used between the die and package, or 2) lead-based die adhesive used between the die and leadframe. The component is otherwise considered Pb-Free (RoHS compatible) as defined above.
Green (RoHS & no Sb/Br): TI defines "Green" to mean Pb-Free (RoHS compatible), and free of Bromine (Br) and Antimony (Sb) based flame retardants (Br or Sb do not exceed 0.1% by weight in homogeneous material)

(3) MSL, Peak Temp. -- The Moisture Sensitivity Level rating according to the JEDEC industry standard classifications, and peak solder temperature.

(4) Only one of markings shown within the brackets will appear on the physical device.

Important Information and Disclaimer: The information provided on this page represents TI's knowledge and belief as of the date that it is provided. TI bases its knowledge and belief on information provided by third parties, and makes no representation or warranty as to the accuracy of such information. Efforts are underway to better integrate information from third parties. TI has taken and continues to take reasonable steps to provide representative and accurate information but may not have conducted destructive testing or chemical analysis on incoming materials and chemicals. TI and TI suppliers consider certain information to be proprietary, and thus CAS numbers and other limited information may not be available for release.

In no event shall TI's liability arising out of such information exceed the total purchase price of the TI part(s) at issue in this document sold by TI to Customer on an annual basis.

TAPE AND REEL INFORMATION

REEL DIMENSIONS

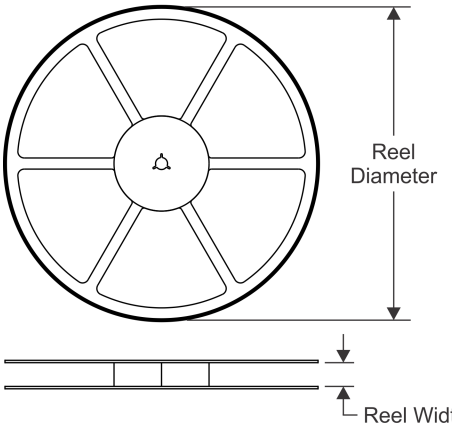

TAPE DIMENSIONS

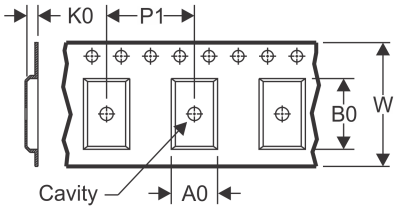

A0	Dimension designed to accommodate the component width
B0	Dimension designed to accommodate the component length
K0	Dimension designed to accommodate the component thickness
W	Overall width of the carrier tape
P1	Pitch between successive cavity centers

QUADRANT ASSIGNMENTS FOR PIN 1 ORIENTATION IN TAPE

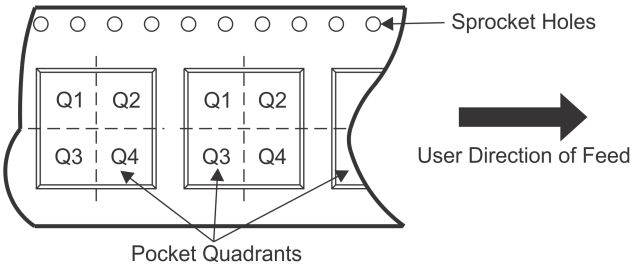

*All dimensions are nominal

Device	Package Type	Package Drawing	Pins	SPQ	Reel Diameter (mm)	Reel Width W1 (mm)	A0 (mm)	B0 (mm)	K0 (mm)	P1 (mm)	W (mm)	Pin1 Quadrant
LM317AEMP	SOT-223	DCY	4	1000	330.0	16.4	7.0	7.5	2.2	12.0	16.0	Q3
LM317AEMP/NOPB	SOT-223	DCY	4	1000	330.0	16.4	7.0	7.5	2.2	12.0	16.0	Q3
LM317AEMPX	SOT-223	DCY	4	2000	330.0	16.4	7.0	7.5	2.2	12.0	16.0	Q3
LM317AEMPX/NOPB	SOT-223	DCY	4	2000	330.0	16.4	7.0	7.5	2.2	12.0	16.0	Q3
LM317AMDTX	PFM	NDP	3	2500	330.0	16.4	6.9	10.5	2.7	8.0	16.0	Q2
LM317AMDTX/NOPB	PFM	NDP	3	2500	330.0	16.4	6.9	10.5	2.7	8.0	16.0	Q2
LM317EMP	SOT-223	DCY	4	1000	330.0	16.4	7.0	7.5	2.2	12.0	16.0	Q3
LM317EMP/NOPB	SOT-223	DCY	4	1000	330.0	16.4	7.0	7.5	2.2	12.0	16.0	Q3
LM317EMPX/NOPB	SOT-223	DCY	4	2000	330.0	16.4	7.0	7.5	2.2	12.0	16.0	Q3
LM317MDTX/NOPB	PFM	NDP	3	2500	330.0	16.4	6.9	10.5	2.7	8.0	16.0	Q2
LM317SX/NOPB	DDPAK/ TO-263	KTT	3	500	330.0	24.4	10.75	14.85	5.0	16.0	24.0	Q2

TAPE AND REEL BOX DIMENSIONS

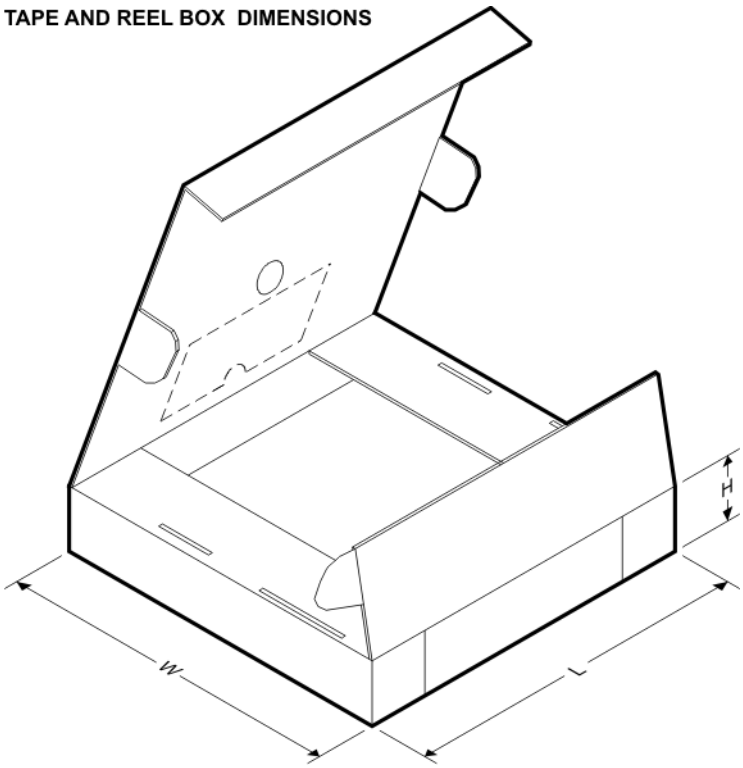

*All dimensions are nominal

Device	Package Type	Package Drawing	Pins	SPQ	Length (mm)	Width (mm)	Height (mm)
LM317AEMP	SOT-223	DCY	4	1000	367.0	367.0	35.0
LM317AEMP/NOPB	SOT-223	DCY	4	1000	367.0	367.0	35.0
LM317AEMPX	SOT-223	DCY	4	2000	367.0	367.0	35.0
LM317AEMPX/NOPB	SOT-223	DCY	4	2000	367.0	367.0	35.0
LM317AMDTX	PFM	NDP	3	2500	367.0	367.0	35.0
LM317AMDTX/NOPB	PFM	NDP	3	2500	367.0	367.0	38.0
LM317EMP	SOT-223	DCY	4	1000	367.0	367.0	35.0
LM317EMP/NOPB	SOT-223	DCY	4	1000	367.0	367.0	35.0
LM317EMPX/NOPB	SOT-223	DCY	4	2000	367.0	367.0	35.0
LM317MDTX/NOPB	PFM	NDP	3	2500	367.0	367.0	38.0
LM317SX/NOPB	DDPAK/TO-263	KTT	3	500	367.0	367.0	45.0

NDT0003A

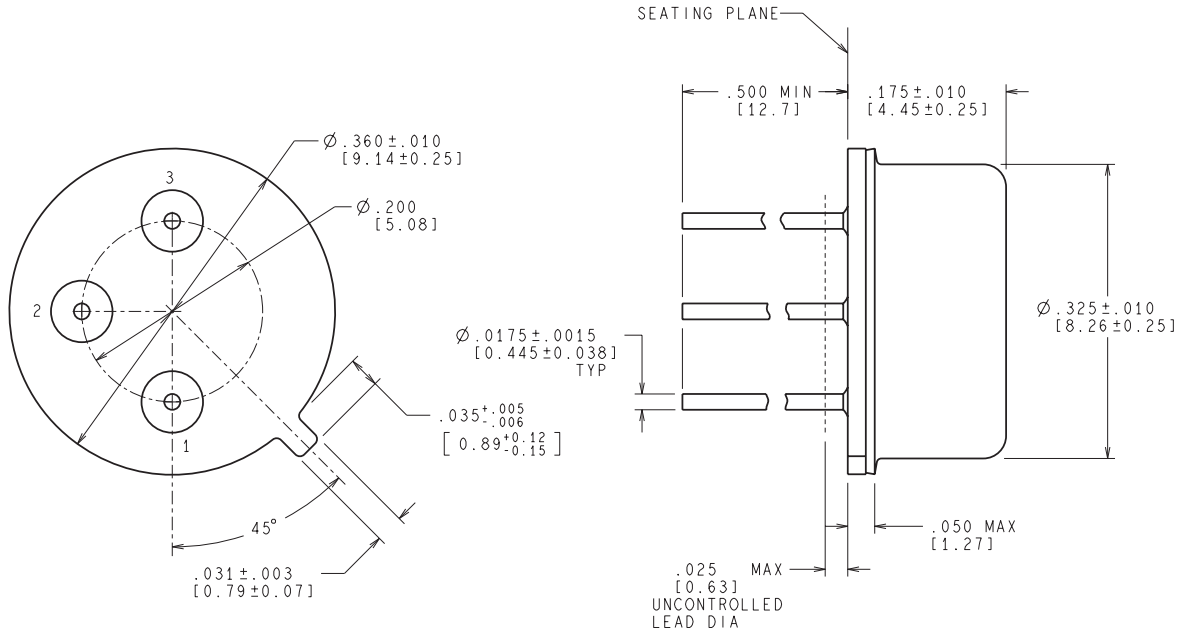

CONTROLLING DIMENSION IS INCH
VALUES IN [ ] ARE MILLIMETERS

MIL-PRF-38535
CONFIGURATION CONTROL

H03A (Rev D)

NDS0002A

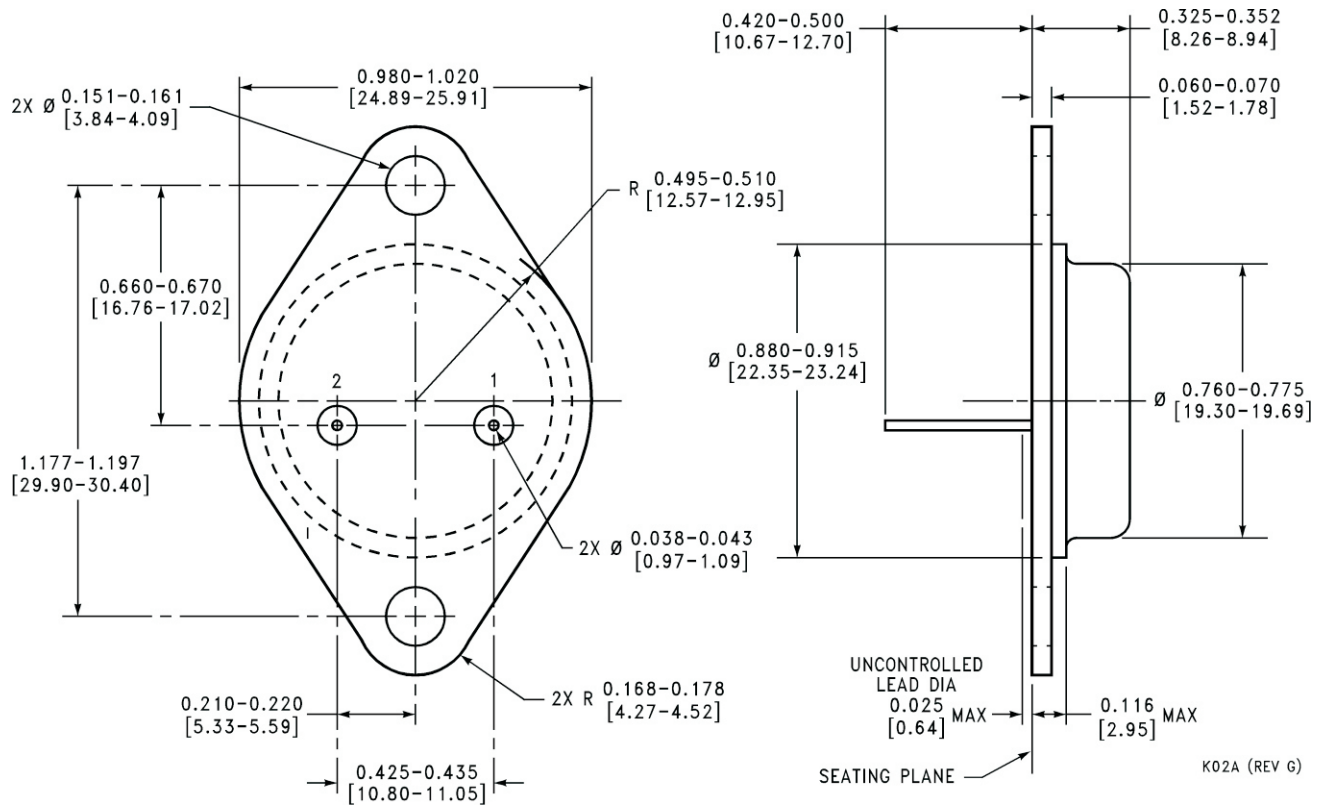
0.420-0.500
[10.67-12.70]
0.325-0.352
[8.26-8.94]
0.060-0.070
[1.52-1.78]
2X Ø 0.151-0.161
[3.84-4.09]
0.980-1.020
[24.89-25.91]
R 0.495-0.510
[12.57-12.95]
0.660-0.670
[16.76-17.02]
Ø 0.880-0.915
[22.35-23.24]
Ø 0.760-0.775
[19.30-19.69]
2
1
1.177-1.197
[29.90-30.40]
2X Ø 0.038-0.043
[0.97-1.09]
UNCONTROLLED
LEAD DIA
0.025
[0.64] MAX
0.116
[2.95] MAX
2X R 0.168-0.178
[4.27-4.52]
0.210-0.220
[5.33-5.59]
0.425-0.435
[10.80-11.05]
SEATING PLANE
K02A (REV G)

NDE0003B

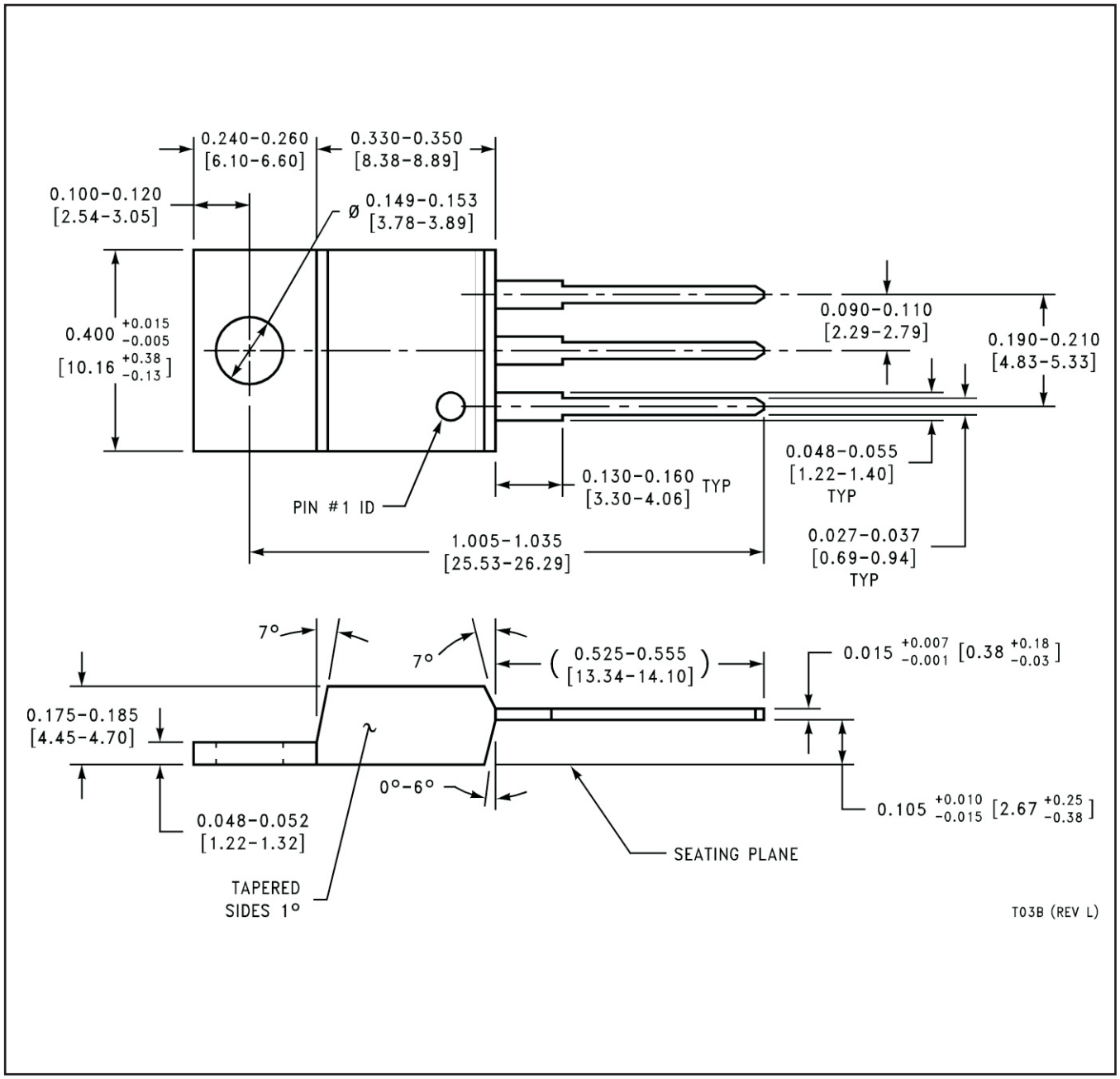
0.240-0.260
[6.10-6.60]
0.330-0.350
[8.38-8.89]
0.100-0.120
[2.54-3.05]
Ø 0.149-0.153
[3.78-3.89]
0.400 +0.015 -0.005
[10.16 +0.38 -0.13]
0.090-0.110
[2.29-2.79]
0.190-0.210
[4.83-5.33]
0.048-0.055
[1.22-1.40]
TYP
0.130-0.160 TYP
[3.30-4.06]
PIN #1 ID
1.005-1.035
[25.53-26.29]
0.027-0.037
[0.69-0.94]
TYP
7°
7°
(0.525-0.555)
[13.34-14.10]
0.015 +0.007 -0.001 [0.38 +0.18 -0.03]
0.175-0.185
[4.45-4.70]
0°-6°
0.105 +0.010 -0.015 [2.67 +0.25 -0.38]
0.048-0.052
[1.22-1.32]
SEATING PLANE
TAPERED
SIDES 1°
T03B (REV L)

NDG0003F

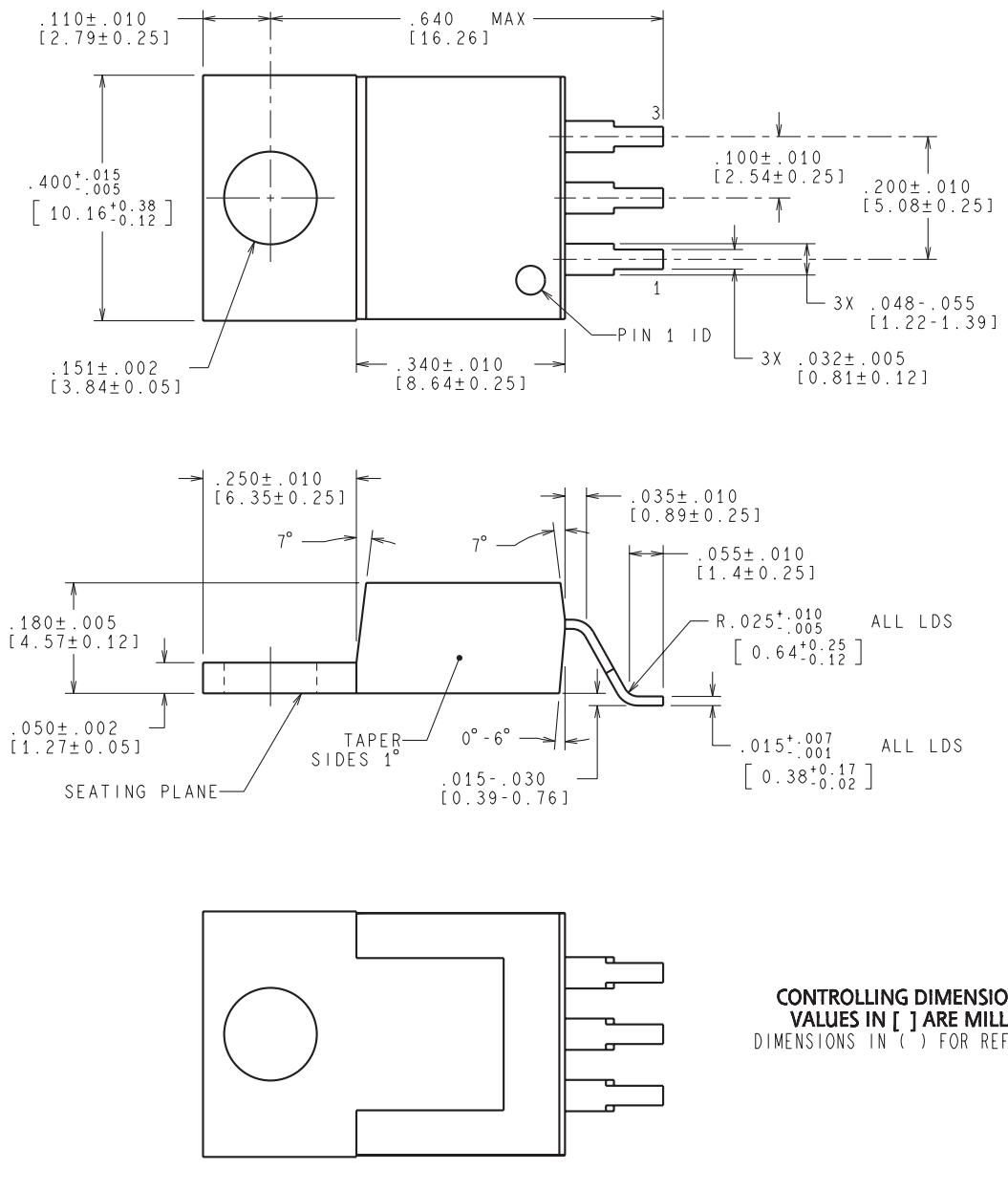

CONTROLLING DIMENSION IS INCH
VALUES IN [ ] ARE MILLIMETERS
DIMENSIONS IN ( ) FOR REFERENCE ONLY

T03F (Rev B)

NDP0003B

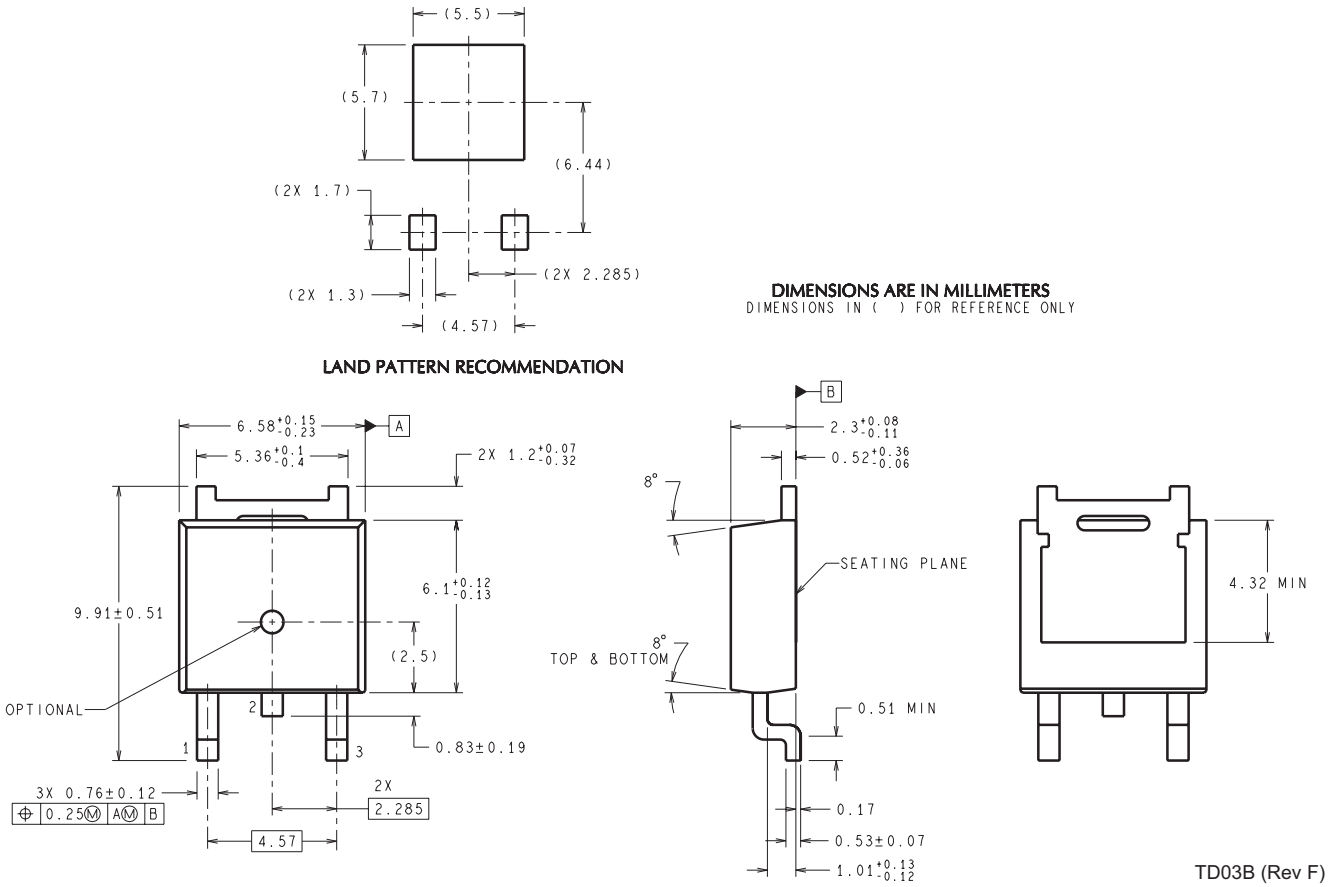
(5.5)
(5.7)
(6.44)
(2X 1.7)
(2X 2.285)
(2X 1.3)
(4.57)
LAND PATTERN RECOMMENDATION
DIMENSIONS ARE IN MILLIMETERS
DIMENSIONS IN ( ) FOR REFERENCE ONLY
6.58 +0.15 -0.23
A
5.36 +0.1 -0.4
2X 1.2 +0.07 -0.32
9.91±0.51
6.1 +0.12 -0.13
(2.5)
OPTIONAL
0.83±0.19
3X 0.76±0.12
0.25 M A M B
2X
2.285
4.57
B
2.3 +0.08 -0.11
0.52 +0.36 -0.06
8°
SEATING PLANE
TOP & BOTTOM
0.51 MIN
0.17
0.53±0.07
1.01 +0.13 -0.12
4.32 MIN
TD03B (Rev F)

DCY (R-PDSO-G4) **PLASTIC SMALL-OUTLINE**

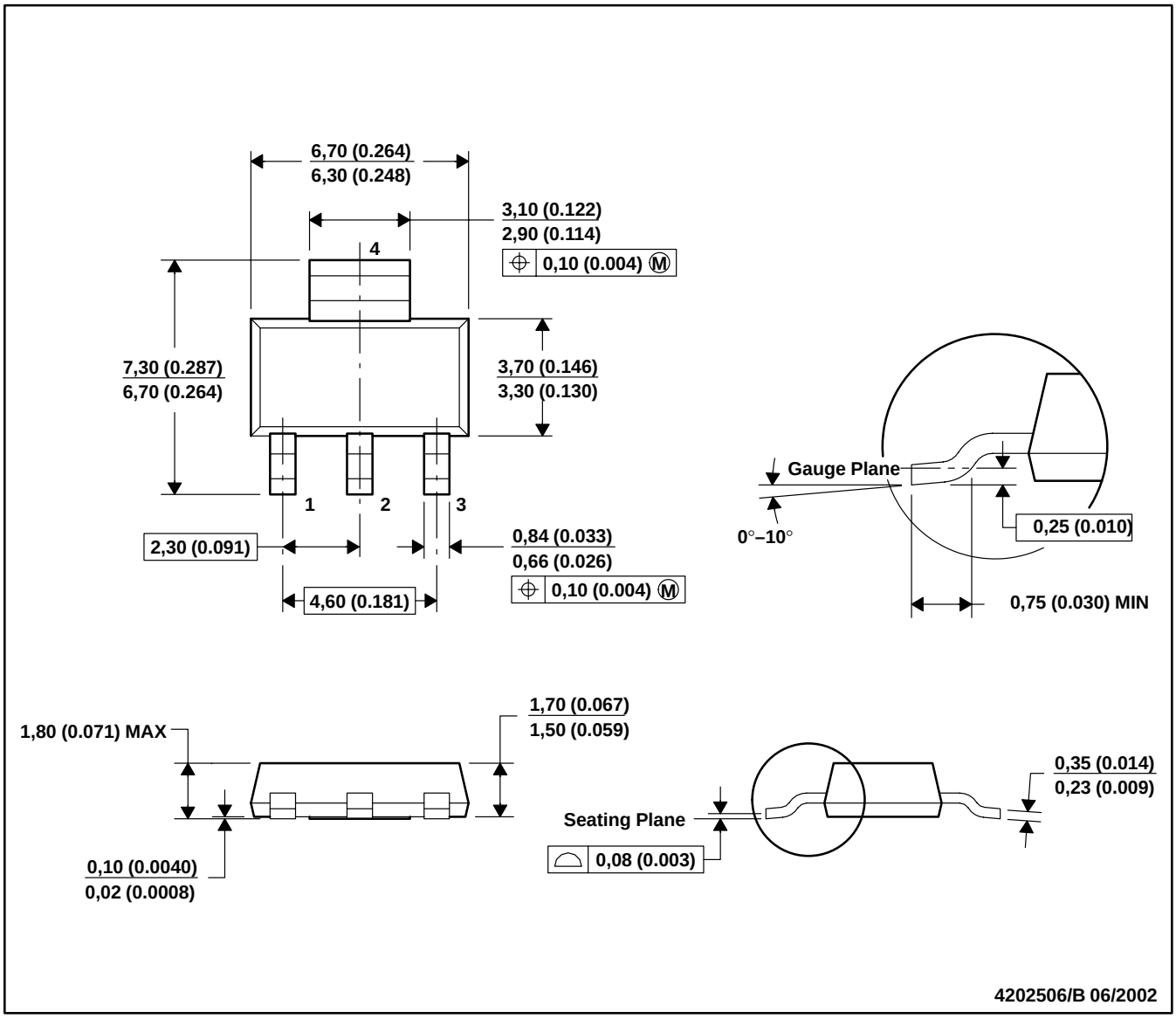

NOTES: A. All linear dimensions are in millimeters (inches).
B. This drawing is subject to change without notice.
C. Body dimensions do not include mold flash or protrusion.
D. Falls within JEDEC TO-261 Variation AA.

KTT0003B

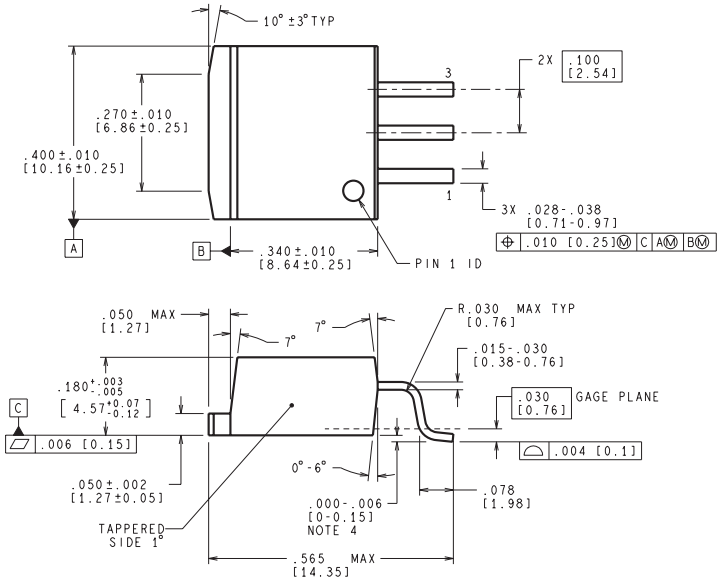

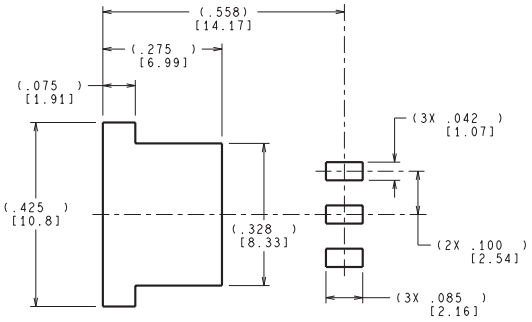

LAND PATTERN RECOMMENDATION

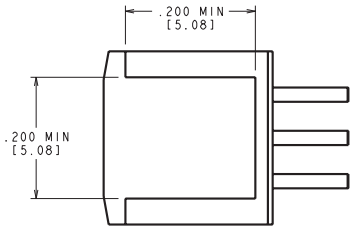

BOTTOM SIDE OF PACKAGE

CONTROLLING DIMENSION IS INCH
VALUES IN [ ] ARE MILLIMETERS
DIMENSIONS IN ( ) FOR REFERENCE ONLY

TS3B (Rev F)

IMPORTANT NOTICE

Texas Instruments Incorporated and its subsidiaries (TI) reserve the right to make corrections, enhancements, improvements and other changes to its semiconductor products and services per JESD46, latest issue, and to discontinue any product or service per JESD48, latest issue. Buyers should obtain the latest relevant information before placing orders and should verify that such information is current and complete. All semiconductor products (also referred to herein as “components”) are sold subject to TI’s terms and conditions of sale supplied at the time of order acknowledgment.

TI warrants performance of its components to the specifications applicable at the time of sale, in accordance with the warranty in TI’s terms and conditions of sale of semiconductor products. Testing and other quality control techniques are used to the extent TI deems necessary to support this warranty. Except where mandated by applicable law, testing of all parameters of each component is not necessarily performed.

TI assumes no liability for applications assistance or the design of Buyers’ products. Buyers are responsible for their products and applications using TI components. To minimize the risks associated with Buyers’ products and applications, Buyers should provide adequate design and operating safeguards.

TI does not warrant or represent that any license, either express or implied, is granted under any patent right, copyright, mask work right, or other intellectual property right relating to any combination, machine, or process in which TI components or services are used. Information published by TI regarding third-party products or services does not constitute a license to use such products or services or a warranty or endorsement thereof. Use of such information may require a license from a third party under the patents or other intellectual property of the third party, or a license from TI under the patents or other intellectual property of TI.

Reproduction of significant portions of TI information in TI data books or data sheets is permissible only if reproduction is without alteration and is accompanied by all associated warranties, conditions, limitations, and notices. TI is not responsible or liable for such altered documentation. Information of third parties may be subject to additional restrictions.

Resale of TI components or services with statements different from or beyond the parameters stated by TI for that component or service voids all express and any implied warranties for the associated TI component or service and is an unfair and deceptive business practice. TI is not responsible or liable for any such statements.

Buyer acknowledges and agrees that it is solely responsible for compliance with all legal, regulatory and safety-related requirements concerning its products, and any use of TI components in its applications, notwithstanding any applications-related information or support that may be provided by TI. Buyer represents and agrees that it has all the necessary expertise to create and implement safeguards which anticipate dangerous consequences of failures, monitor failures and their consequences, lessen the likelihood of failures that might cause harm and take appropriate remedial actions. Buyer will fully indemnify TI and its representatives against any damages arising out of the use of any TI components in safety-critical applications.

In some cases, TI components may be promoted specifically to facilitate safety-related applications. With such components, TI’s goal is to help enable customers to design and create their own end-product solutions that meet applicable functional safety standards and requirements. Nonetheless, such components are subject to these terms.

No TI components are authorized for use in FDA Class III (or similar life-critical medical equipment) unless authorized officers of the parties have executed a special agreement specifically governing such use.

Only those TI components which TI has specifically designated as military grade or “enhanced plastic” are designed and intended for use in military/aerospace applications or environments. Buyer acknowledges and agrees that any military or aerospace use of TI components which have ***not*** been so designated is solely at the Buyer's risk, and that Buyer is solely responsible for compliance with all legal and regulatory requirements in connection with such use.

TI has specifically designated certain components as meeting ISO/TS16949 requirements, mainly for automotive use. In any case of use of non-designated products, TI will not be responsible for any failure to meet ISO/TS16949.

Products		**Applications**	
Audio	www.ti.com/audio	Automotive and Transportation	www.ti.com/automotive
Amplifiers	amplifier.ti.com	Communications and Telecom	www.ti.com/communications
Data Converters	dataconverter.ti.com	Computers and Peripherals	www.ti.com/computers
DLP® Products	www.dlp.com	Consumer Electronics	www.ti.com/consumer-apps
DSP	dsp.ti.com	Energy and Lighting	www.ti.com/energy
Clocks and Timers	www.ti.com/clocks	Industrial	www.ti.com/industrial
Interface	interface.ti.com	Medical	www.ti.com/medical
Logic	logic.ti.com	Security	www.ti.com/security
Power Mgmt	power.ti.com	Space, Avionics and Defense	www.ti.com/space-avionics-defense
Microcontrollers	microcontroller.ti.com	Video and Imaging	www.ti.com/video
RFID	www.ti-rfid.com		
OMAP Applications Processors	www.ti.com/omap	**TI E2E Community**	e2e.ti.com
Wireless Connectivity	www.ti.com/wirelessconnectivity		

Mailing Address: Texas Instruments, Post Office Box 655303, Dallas, Texas 75265
Copyright © 2013, Texas Instruments Incorporated

- **1-A Output-Current Capability Per Driver**
- **Applications Include Half-H and Full-H Solenoid Drivers and Motor Drivers**
- **Designed for Positive-Supply Applications**
- **Wide Supply-Voltage Range of 4.5 V to 36 V**
- **TTL- and CMOS-Compatible High-Impedance Diode-Clamped Inputs**
- **Separate Input-Logic Supply**
- **Thermal Shutdown**
- **Internal ESD Protection**
- **Input Hysteresis Improves Noise Immunity**
- **3-State Outputs**
- **Minimized Power Dissipation**
- **Sink/Source Interlock Circuitry Prevents Simultaneous Conduction**
- **No Output Glitch During Power Up or Power Down**
- **Improved Functional Replacement for the SGS L293**

NE PACKAGE
(TOP VIEW)

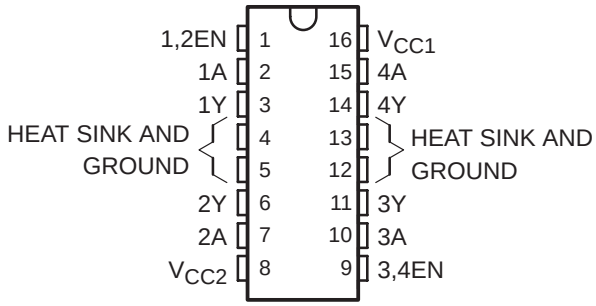

FUNCTION TABLE
(each driver)

INPUTS†		OUTPUT
A	EN	Y
H	H	H
L	H	L
X	L	Z

H = high-level, L = low-level
X = irrelevant
Z = high-impedance (off)
† In the thermal shutdown mode, the output is in a high-impedance state regardless of the input levels.

description

The SN754410 is a quadruple high-current half-H driver designed to provide bidirectional drive currents up to 1 A at voltages from 4.5 V to 36 V. The device is designed to drive inductive loads such as relays, solenoids, dc and bipolar stepping motors, as well as other high-current/high-voltage loads in positive-supply applications.

All inputs are compatible with TTL-and low-level CMOS logic. Each output (Y) is a complete totem-pole driver with a Darlington transistor sink and a pseudo-Darlington source. Drivers are enabled in pairs with drivers 1 and 2 enabled by 1,2EN and drivers 3 and 4 enabled by 3,4EN. When an enable input is high, the associated drivers are enabled and their outputs become active and in phase with their inputs. When the enable input is low, those drivers are disabled and their outputs are off and in a high-impedance state. With the proper data inputs, each pair of drivers form a full-H (or bridge) reversible drive suitable for solenoid or motor applications.

A separate supply voltage (V_{CC1}) is provided for the logic input circuits to minimize device power dissipation. Supply voltage V_{CC2} is used for the output circuits.

The SN754410 is designed for operation from −40°C to 85°C.

PRODUCTION DATA information is current as of publication date. Products conform to specifications per the terms of Texas Instruments standard warranty. Production processing does not necessarily include testing of all parameters.

Copyright © 1995, Texas Instruments Incorporated

logic symbol†

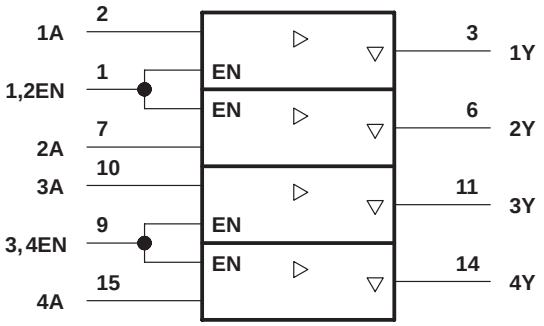

† This symbol is in accordance with ANSI/IEEE Std 91-1984 and IEC Publication 617-12.

logic diagram

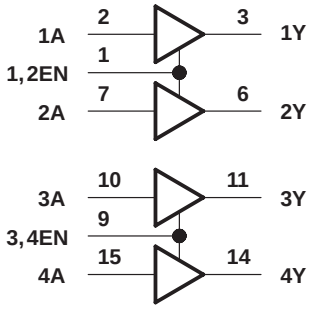

schematics of inputs and outputs

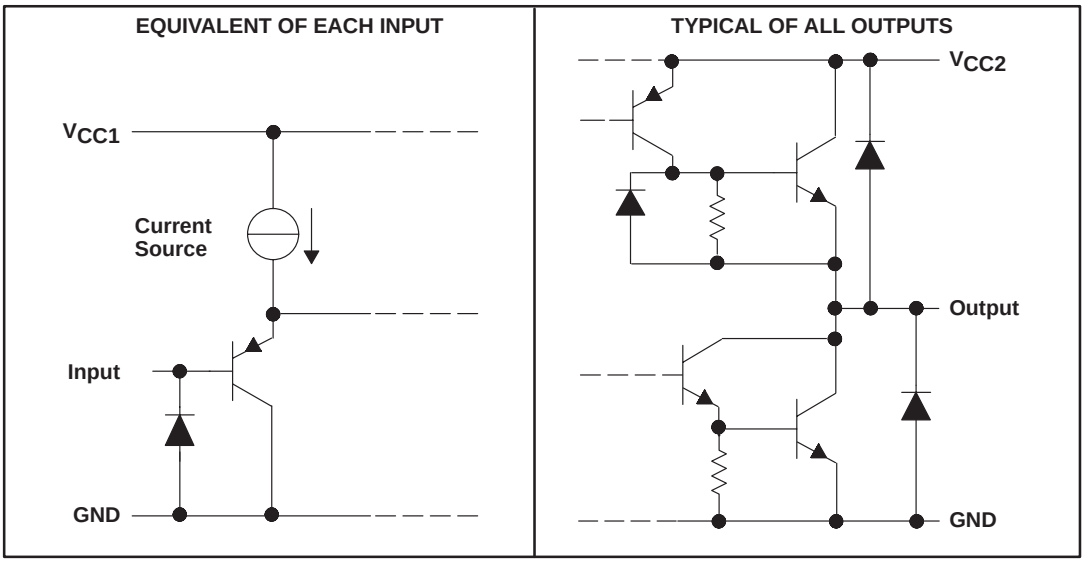

absolute maximum ratings over operating free-air temperature range (unless otherwise noted)†

Output supply voltage range, V_{CC1} (see Note 1) . . . . . −0.5 V to 36 V
Output supply voltage range, V_{CC2} . . . . . −0.5 V to 36 V
Input voltage, V_I . . . . . 36 V
Output voltage range, V_O . . . . . −3 V to V_{CC2} + 3 V
Peak output current (nonrepetitive, $t_w \leq 5$ ms) . . . . . ±2 A
Continuous output current, I_O . . . . . ±1.1 A
Continuous total power dissipation at (or below) 25°C free-air temperature (see Note 2) . . . . . 2075 mW
Operating free-air temperature range, T_A . . . . . −40°C to 85°C
Operating virtual junction temperature range, T_J . . . . . −40°C to 150°C
Storage temperature range, T_{stg} . . . . . −65°C to 150°C
Lead temperature 1,6 mm (1/16 inch) from case for 10 seconds . . . . . 260°C

† Stresses beyond those listed under “absolute maximum ratings” may cause permanent damage to the device. These are stress ratings only, and functional operation of the device at these or any other conditions beyond those indicated under “recommended operating conditions” is not implied. Exposure to absolute-maximum-rated conditions for extended periods may affect device reliability.

NOTES: 1. All voltage values are with respect to network GND.
2. For operation above 25°C free-air temperature, derate linearly at the rate of 16.6 mW/°C. To avoid exceeding the design maximum virtual junction temperature, these ratings should not be exceeded. Due to variations in individual device electrical characteristics and thermal resistance, the built-in thermal overload protection can be activated at power levels slightly above or below the rated dissipation.

recommended operating conditions

	MIN	MAX	UNIT
Output supply voltage, V_{CC1}	4.5	5.5	V
Output supply voltage, V_{CC2}	4.5	36	V
High-level input voltage, V_{IH}	2	5.5	V
Low-level input voltage, V_{IL}	−0.3‡	0.8	V
Operating virtual junction temperature, T_J	−40	125	°C
Operating free-air temperature, T_A	−40	85	°C

‡ The algebraic convention, in which the least positive (most negative) limit is designated as minimum, is used in this data sheet for logic voltage levels.

electrical characteristics over recommended ranges of supply voltage and free-air temperature (unless otherwise noted)

PARAMETER		TEST CONDITIONS		MIN	TYP†	MAX	UNIT
V_{IK}	Input clamp voltage	$I_I = -12$ mA			−0.9	−1.5	V
V_{OH}	High-level output voltage	$I_{OH} = -0.5$ A		$V_{CC2}-1.5$	$V_{CC2}-1.1$		V
		$I_{OH} = -1$ A		$V_{CC2}-2$			
		$I_{OH} = -1$ A,	$T_J = 25°C$	$V_{CC2}-1.8$	$V_{CC2}-1.4$		
V_{OL}	Low-level output voltage	$I_{OL} = 0.5$ A			1	1.4	V
		$I_{OL} = 1$ A				2	
		$I_{OL} = 1$ A,	$T_J = 25°C$		1.2	1.8	
V_{OKH}	High-level output clamp voltage	$I_{OK} = -0.5$ A			$V_{CC2}+1.4$	$V_{CC2}+2$	V
		$I_{OK} = 1$ A			$V_{CC2}+1.9$	$V_{CC2}+2.5$	
V_{OKL}	Low-level output clamp voltage	$I_{OK} = 0.5$ A			−1.1	−2	V
		$I_{OK} = -1$ A			−1.3	−2.5	
$I_{OZ(off)}$	Off-state high-impedance-state output current	$V_O = V_{CC2}$				500	µA
		$V_O = 0$				−500	
I_{IH}	High-level input current	$V_I = 5.5$ V				10	µA
I_{IL}	Low-level input current	$V_I = 0$				−10	µA
I_{CC1}	Output supply current	$I_O = 0$	All outputs at high level			38	mA
			All outputs at low level			70	
			All outputs at high impedance			25	
I_{CC2}	Output supply current	$I_O = 0$	All outputs at high level			33	mA
			All outputs at low level			20	
			All outputs at high impedance			5	

† All typical values are at $V_{CC1} = 5$ V, $V_{CC2} = 24$ V, $T_A = 25°C$.

switching characteristics, $V_{CC1} = 5$ V, $V_{CC2} = 24$ V, $C_L = 30$ pF, $T_A = 25°C$

PARAMETER		TEST CONDITIONS	MIN	TYP	MAX	UNIT
t_{d1}	Delay time, high-to-low-level output from A input	See Figure 1		400		ns
t_{d2}	Delay time, low-to-high-level output from A input			800		ns
t_{TLH}	Transition time, low-to-high-level output			300		ns
t_{THL}	Transition time, high-to-low-level output			300		ns
t_r	Rise time, pulse input					
t_f	Fall time, pulse input					
t_w	Pulse duration					
t_{en1}	Enable time to the high level	See Figure 2		700		ns
t_{en2}	Enable time to the low level			400		ns
t_{dis1}	Disable time from the high level			900		ns
t_{dis2}	Disable time from the low level			600		ns

PARAMETER MEASUREMENT INFORMATION

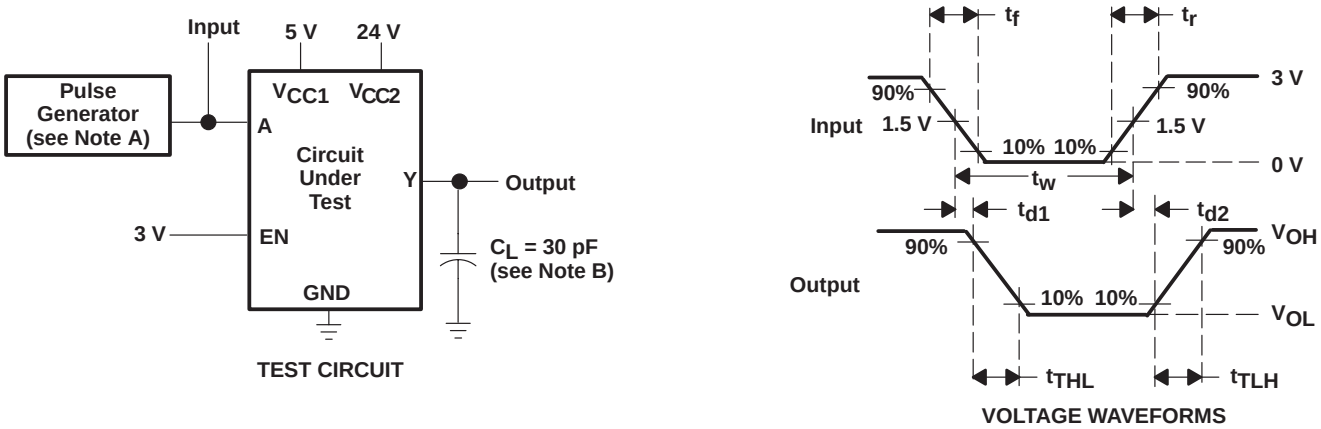

Figure 1. Test Circuit and Switching Times From Data Inputs

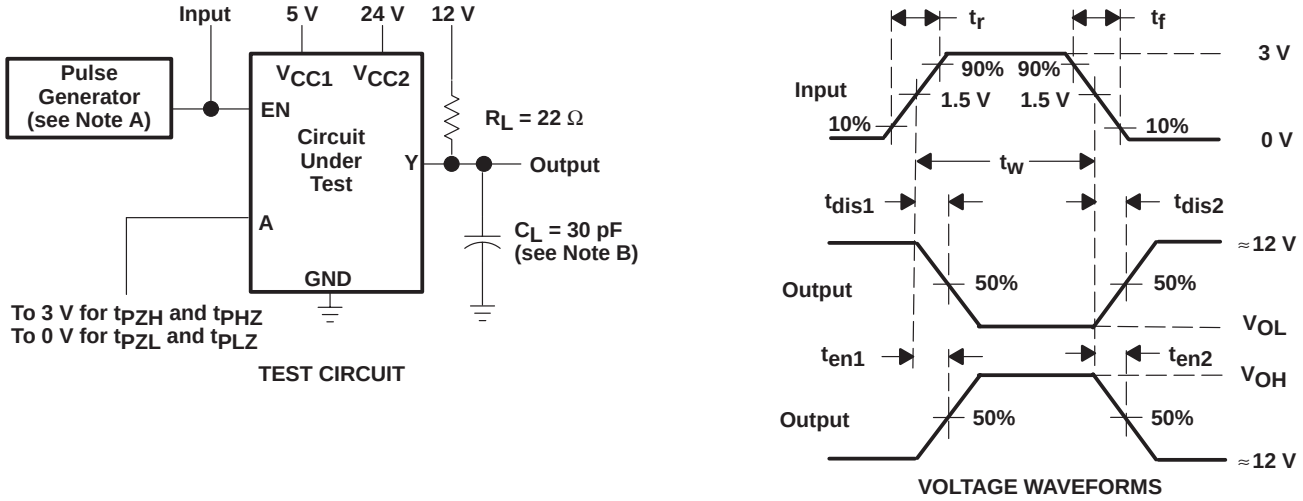

Figure 2. Test Circuit and Switching Times From Enable Inputs

NOTES: A. The pulse generator has the following characteristics: $t_r \leq 10$ ns, $t_f \leq 10$ ns, $t_w = 10$ µs, PRR = 5 kHz, $Z_O = 50\ \Omega$.
B. C_L includes probe and jig capacitance.

APPLICATION INFORMATION

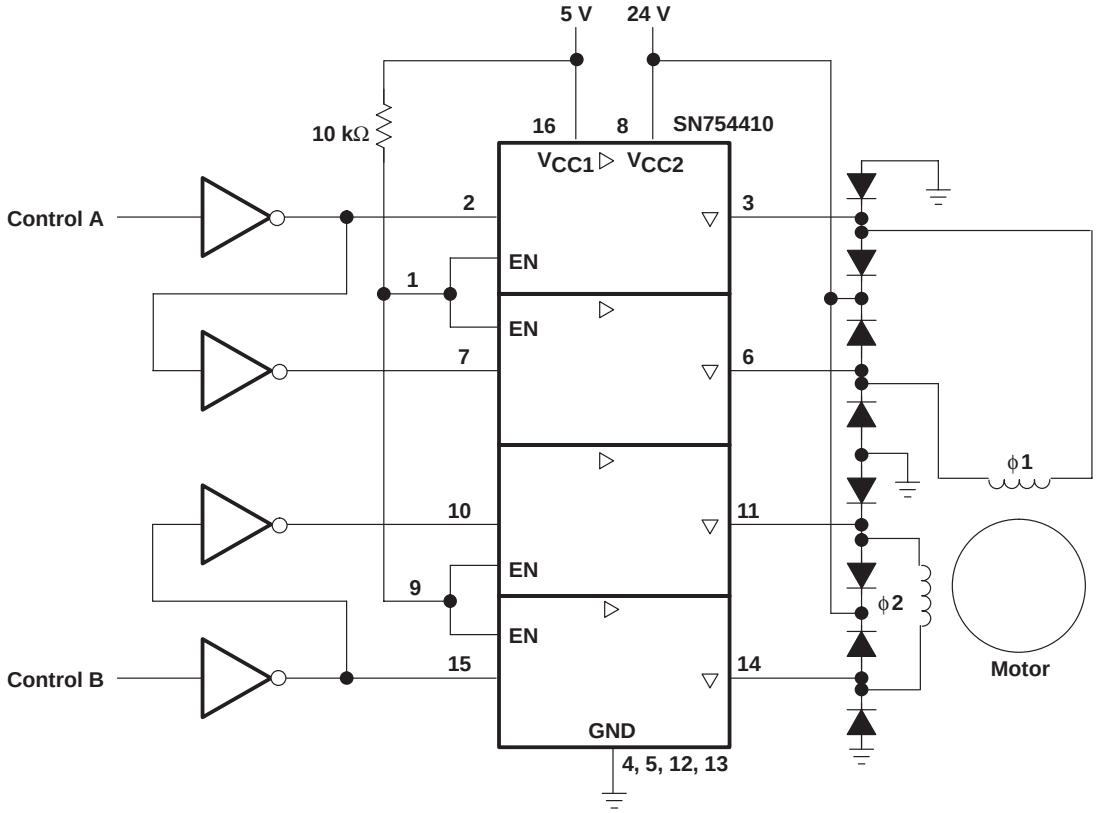

Figure 3. Two-Phase Motor Driver

PACKAGING INFORMATION

Orderable Device	Status [1]	Package Type	Package Drawing	Pins	Package Qty	Eco Plan [2]	Lead/Ball Finish	MSL Peak Temp [3]
SN754410NE	ACTIVE	PDIP	NE	16	25	Pb-Free (RoHS)	CU NIPDAU	N / A for Pkg Type
SN754410NEE4	ACTIVE	PDIP	NE	16	25	Pb-Free (RoHS)	CU NIPDAU	N / A for Pkg Type

[1] The marketing status values are defined as follows:
ACTIVE: Product device recommended for new designs.
LIFEBUY: TI has announced that the device will be discontinued, and a lifetime-buy period is in effect.
NRND: Not recommended for new designs. Device is in production to support existing customers, but TI does not recommend using this part in a new design.
PREVIEW: Device has been announced but is not in production. Samples may or may not be available.
OBSOLETE: TI has discontinued the production of the device.

[2] Eco Plan - The planned eco-friendly classification: Pb-Free (RoHS), Pb-Free (RoHS Exempt), or Green (RoHS & no Sb/Br) - please check http://www.ti.com/productcontent for the latest availability information and additional product content details.
TBD: The Pb-Free/Green conversion plan has not been defined.
Pb-Free (RoHS): TI's terms "Lead-Free" or "Pb-Free" mean semiconductor products that are compatible with the current RoHS requirements for all 6 substances, including the requirement that lead not exceed 0.1% by weight in homogeneous materials. Where designed to be soldered at high temperatures, TI Pb-Free products are suitable for use in specified lead-free processes.
Pb-Free (RoHS Exempt): This component has a RoHS exemption for either 1) lead-based flip-chip solder bumps used between the die and package, or 2) lead-based die adhesive used between the die and leadframe. The component is otherwise considered Pb-Free (RoHS compatible) as defined above.
Green (RoHS & no Sb/Br): TI defines "Green" to mean Pb-Free (RoHS compatible), and free of Bromine (Br) and Antimony (Sb) based flame retardants (Br or Sb do not exceed 0.1% by weight in homogeneous material)

[3] MSL, Peak Temp. -- The Moisture Sensitivity Level rating according to the JEDEC industry standard classifications, and peak solder temperature.

Important Information and Disclaimer: The information provided on this page represents TI's knowledge and belief as of the date that it is provided. TI bases its knowledge and belief on information provided by third parties, and makes no representation or warranty as to the accuracy of such information. Efforts are underway to better integrate information from third parties. TI has taken and continues to take reasonable steps to provide representative and accurate information but may not have conducted destructive testing or chemical analysis on incoming materials and chemicals. TI and TI suppliers consider certain information to be proprietary, and thus CAS numbers and other limited information may not be available for release.

In no event shall TI's liability arising out of such information exceed the total purchase price of the TI part(s) at issue in this document sold by TI to Customer on an annual basis.

NE (R-PDIP-T**)

PLASTIC DUAL-IN-LINE PACKAGE

20 PIN SHOWN

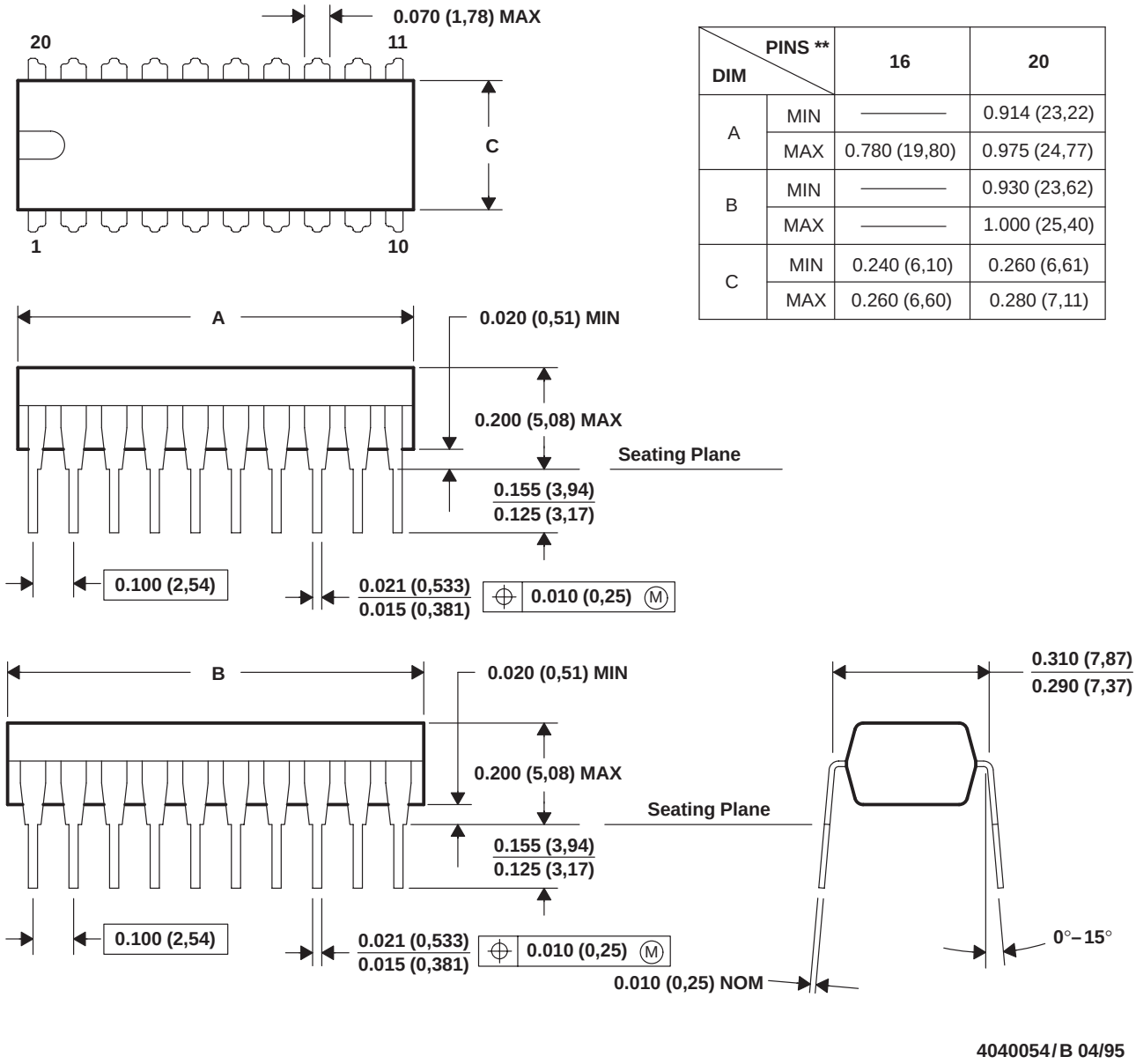

DIM \ PINS **		16	20
A	MIN	———	0.914 (23,22)
	MAX	0.780 (19,80)	0.975 (24,77)
B	MIN	———	0.930 (23,62)
	MAX	———	1.000 (25,40)
C	MIN	0.240 (6,10)	0.260 (6,61)
	MAX	0.260 (6,60)	0.280 (7,11)

NOTES: A. All linear dimensions are in inches (millimeters).
B. This drawing is subject to change without notice.
C. Falls within JEDEC MS-001 (16 pin only)

IMPORTANT NOTICE

Texas Instruments Incorporated and its subsidiaries (TI) reserve the right to make corrections, modifications, enhancements, improvements, and other changes to its products and services at any time and to discontinue any product or service without notice. Customers should obtain the latest relevant information before placing orders and should verify that such information is current and complete. All products are sold subject to TI's terms and conditions of sale supplied at the time of order acknowledgment.

TI warrants performance of its hardware products to the specifications applicable at the time of sale in accordance with TI's standard warranty. Testing and other quality control techniques are used to the extent TI deems necessary to support this warranty. Except where mandated by government requirements, testing of all parameters of each product is not necessarily performed.

TI assumes no liability for applications assistance or customer product design. Customers are responsible for their products and applications using TI components. To minimize the risks associated with customer products and applications, customers should provide adequate design and operating safeguards.

TI does not warrant or represent that any license, either express or implied, is granted under any TI patent right, copyright, mask work right, or other TI intellectual property right relating to any combination, machine, or process in which TI products or services are used. Information published by TI regarding third-party products or services does not constitute a license from TI to use such products or services or a warranty or endorsement thereof. Use of such information may require a license from a third party under the patents or other intellectual property of the third party, or a license from TI under the patents or other intellectual property of TI.

Reproduction of TI information in TI data books or data sheets is permissible only if reproduction is without alteration and is accompanied by all associated warranties, conditions, limitations, and notices. Reproduction of this information with alteration is an unfair and deceptive business practice. TI is not responsible or liable for such altered documentation. Information of third parties may be subject to additional restrictions.

Resale of TI products or services with statements different from or beyond the parameters stated by TI for that product or service voids all express and any implied warranties for the associated TI product or service and is an unfair and deceptive business practice. TI is not responsible or liable for any such statements.

TI products are not authorized for use in safety-critical applications (such as life support) where a failure of the TI product would reasonably be expected to cause severe personal injury or death, unless officers of the parties have executed an agreement specifically governing such use. Buyers represent that they have all necessary expertise in the safety and regulatory ramifications of their applications, and acknowledge and agree that they are solely responsible for all legal, regulatory and safety-related requirements concerning their products and any use of TI products in such safety-critical applications, notwithstanding any applications-related information or support that may be provided by TI. Further, Buyers must fully indemnify TI and its representatives against any damages arising out of the use of TI products in such safety-critical applications.

TI products are neither designed nor intended for use in military/aerospace applications or environments unless the TI products are specifically designated by TI as military-grade or "enhanced plastic." Only products designated by TI as military-grade meet military specifications. Buyers acknowledge and agree that any such use of TI products which TI has not designated as military-grade is solely at the Buyer's risk, and that they are solely responsible for compliance with all legal and regulatory requirements in connection with such use.

TI products are neither designed nor intended for use in automotive applications or environments unless the specific TI products are designated by TI as compliant with ISO/TS 16949 requirements. Buyers acknowledge and agree that, if they use any non-designated products in automotive applications, TI will not be responsible for any failure to meet such requirements.

Following are URLs where you can obtain information on other Texas Instruments products and application solutions:

Products		**Applications**	
Amplifiers	amplifier.ti.com	Audio	www.ti.com/audio
Data Converters	dataconverter.ti.com	Automotive	www.ti.com/automotive
DSP	dsp.ti.com	Broadband	www.ti.com/broadband
Clocks and Timers	www.ti.com/clocks	Digital Control	www.ti.com/digitalcontrol
Interface	interface.ti.com	Medical	www.ti.com/medical
Logic	logic.ti.com	Military	www.ti.com/military
Power Mgmt	power.ti.com	Optical Networking	www.ti.com/opticalnetwork
Microcontrollers	microcontroller.ti.com	Security	www.ti.com/security
RFID	www.ti-rfid.com	Telephony	www.ti.com/telephony
RF/IF and ZigBee® Solutions	www.ti.com/lprf	Video & Imaging	www.ti.com/video
		Wireless	www.ti.com/wireless

Mailing Address: Texas Instruments, Post Office Box 655303, Dallas, Texas 75265
Copyright © 2008, Texas Instruments Incorporated

FAIRCHILD SEMICONDUCTOR®

August 2012

LM78XX/LM78XXA
3-Terminal 1A Positive Voltage Regulator

Features

- Output Current up to 1A
- Output Voltages of 5, 6, 8, 9, 10, 12, 15, 18, 24
- Thermal Overload Protection
- Short Circuit Protection
- Output Transistor Safe Operating Area Protection

General Description

The LM78XX series of three terminal positive regulators are available in the TO-220 package and with several fixed output voltages, making them useful in a wide range of applications. Each type employs internal current limiting, thermal shut down and safe operating area protection, making it essentially indestructible. If adequate heat sinking is provided, they can deliver over 1A output current. Although designed primarily as fixed voltage regulators, these devices can be used with external components to obtain adjustable voltages and currents.

Ordering Information

Product Number	Output Voltage Tolerance	Package	Operating Temperature
LM7805CT	±4%	TO-220 (Single Gauge)	-40°C to +125°C
LM7806CT			
LM7808CT			
LM7809CT			
LM7810CT			
LM7812CT			
LM7815CT			
LM7818CT			
LM7824CT			
LM7805ACT	±2%		0°C to +125°C
LM7806ACT			
LM7808ACT			
LM7809ACT			
LM7810ACT			
LM7812ACT			
LM7815ACT			
LM7818ACT			
LM7824ACT			

© 2012 Fairchild Semiconductor Corporation

Block Diagram

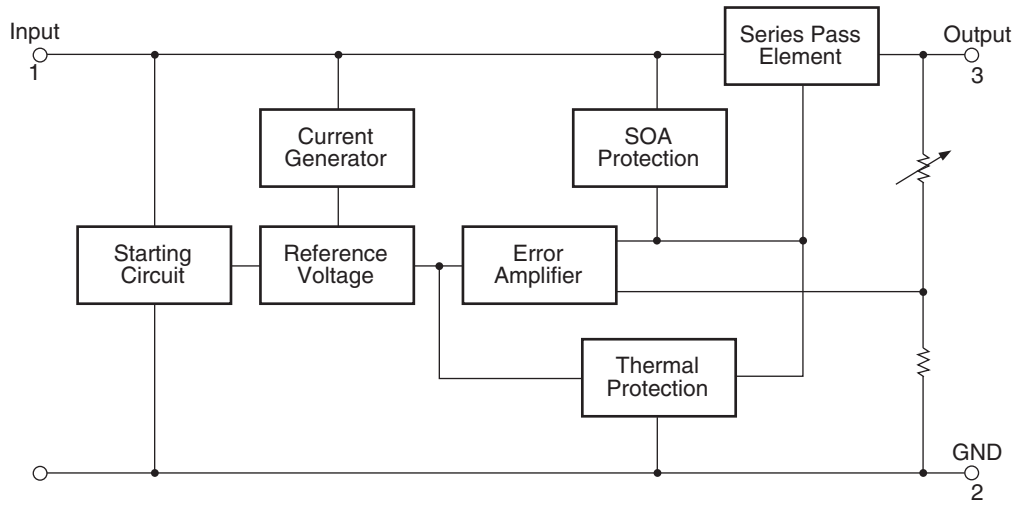

Figure 1.

Pin Assignment

TO-220 (Single Gauge)

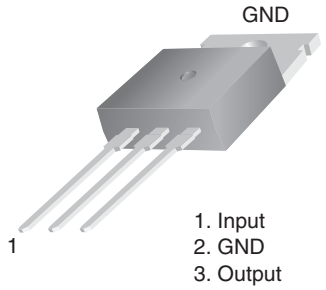

Figure 2.

Absolute Maximum Ratings

Absolute maximum ratings are those values beyond which damage to the device may occur. The datasheet specifications should be met, without exception, to ensure that the system design is reliable over its power supply, temperature, and output/input loading variables. Fairchild does not recommend operation outside datasheet specifications.

Symbol	Parameter		Value	Unit
V_I	Input Voltage	V_O = 5V to 18V	35	V
		V_O = 24V	40	V
$R_{\theta JC}$	Thermal Resistance Junction-Cases (TO-220)		5	°C/W
$R_{\theta JA}$	Thermal Resistance Junction-Air (TO-220)		65	°C/W
T_{OPR}	Operating Temperature Range	LM78xx	-40 to +125	°C
		LM78xxA	0 to +125	
T_{STG}	Storage Temperature Range		-65 to +150	°C

Electrical Characteristics (LM7805)

Refer to the test circuits. -40°C < T_J < 125°C, I_O = 500mA, V_I = 10V, C_I = 0.1µF, unless otherwise specified.

Symbol	Parameter	Conditions		Min.	Typ.	Max.	Unit
V_O	Output Voltage	T_J = +25°C		4.8	5.0	5.2	V
		5mA ≤ I_O ≤ 1A, P_O ≤ 15W, V_I = 7V to 20V		4.75	5.0	5.25	
Regline	Line Regulation(1)	T_J = +25°C	V_O = 7V to 25V	–	4.0	100	mV
			V_I = 8V to 12V	–	1.6	50.0	
Regload	Load Regulation(1)	T_J = +25°C	I_O = 5mA to 1.5A	–	9.0	100	mV
			I_O = 250mA to 750mA	–	4.0	50.0	
I_Q	Quiescent Current	T_J = +25°C		–	5.0	8.0	mA
ΔI_Q	Quiescent Current Change	I_O = 5mA to 1A		–	0.03	0.5	mA
		V_I = 7V to 25V		–	0.3	1.3	
$\Delta V_O/\Delta T$	Output Voltage Drift(2)	I_O = 5mA		–	-0.8	–	mV/°C
V_N	Output Noise Voltage	f = 10Hz to 100kHz, T_A = +25°C		–	42.0	–	µV/V_O
RR	Ripple Rejection(2)	f = 120Hz, V_O = 8V to 18V		62.0	73.0	–	dB
V_{DROP}	Dropout Voltage	I_O = 1A, T_J = +25°C		–	2.0	–	V
r_O	Output Resistance(2)	f = 1kHz		–	15.0	–	mΩ
I_{SC}	Short Circuit Current	V_I = 35V, T_A = +25°C		–	230	–	mA
I_{PK}	Peak Current(2)	T_J = +25°C		–	2.2	–	A

Notes:

1. Load and line regulation are specified at constant junction temperature. Changes in V_O due to heating effects must be taken into account separately. Pulse testing with low duty is used.
2. These parameters, although guaranteed, are not 100% tested in production.

Electrical Characteristics (LM7806) (Continued)

Refer to the test circuits. -40°C < T_J < 125°C, I_O = 500mA, V_I = 11V, C_I = 0.33µF, C_O = 0.1µF, unless otherwise specified.

Symbol	Parameter	Conditions		Min	Typ.	Max.	Unit
V_O	Output Voltage	T_J = +25°C		5.75	6.0	6.25	V
		5mA ≤ I_O ≤ 1A, P_O ≤ 15W, V_I = 8.0V to 21V		5.7	6.0	6.3	
Regline	Line Regulation(3)	T_J = +25°C	V_I = 8V to 25V	–	5.0	120	mV
			V_I = 9V to 13V	–	1.5	60.0	
Regload	Load Regulation(3)	T_J = +25°C	I_O = 5mA to 1.5A	–	9.0	120	mV
			I_O = 250mA to 750mA	–	3.0	60.0	
I_Q	Quiescent Current	T_J = +25°C		–	5.0	8.0	mA
ΔI_Q	Quiescent Current Change	I_O = 5mA to 1A		–	–	0.5	mA
		V_I = 8V to 25V		–	–	1.3	
$\Delta V_O/\Delta T$	Output Voltage Drift(4)	I_O = 5mA		–	-0.8	–	mV/°C
V_N	Output Noise Voltage	f = 10Hz to 100kHz, T_A = +25°C		–	45.0	–	µV/V_O
RR	Ripple Rejection(4)	f = 120Hz, V_O = 8V to 18V		62.0	73.0	–	dB
V_{DROP}	Dropout Voltage	I_O = 1A, T_J = +25°C		–	2.0	–	V
r_O	Output Resistance(4)	f = 1kHz		–	19.0	–	mΩ
I_{SC}	Short Circuit Current	V_I = 35V, T_A = +25°C		–	250	–	mA
I_{PK}	Peak Current(4)	T_J = +25°C		–	2.2	–	A

Notes:

3. Load and line regulation are specified at constant junction temperature. Changes in V_O due to heating effects must be taken into account separately. Pulse testing with low duty is used.
4. These parameters, although guaranteed, are not 100% tested in production.

Electrical Characteristics (LM7808) (Continued)

Refer to the test circuits. -40°C < T_J < 125°C, I_O = 500mA, V_I = 14V, C_I = 0.33µF, C_O = 0.1µF, unless otherwise specified.

Symbol	Parameter	Conditions		Min.	Typ.	Max.	Unit
V_O	Output Voltage	T_J = +25°C		7.7	8.0	8.3	V
		5mA ≤ I_O ≤ 1A, P_O ≤ 15W, V_I = 10.5V to 23V		7.6	8.0	8.4	
Regline	Line Regulation(5)	T_J = +25°C	V_I = 10.5V to 25V	–	5.0	160	mV
			V_I = 11.5V to 17V	–	2.0	80.0	
Regload	Load Regulation(5)	T_J = +25°C	I_O = 5mA to 1.5A	–	10.0	160	mV
			I_O = 250mA to 750mA	–	5.0	80.0	
I_Q	Quiescent Current	T_J = +25°C		–	5.0	8.0	mA
ΔI_Q	Quiescent Current Change	I_O = 5mA to 1A		–	0.05	0.5	mA
		V_I = 10.5V to 25V		–	0.5	1.0	
$\Delta V_O/\Delta T$	Output Voltage Drift(6)	I_O = 5mA		–	-0.8	–	mV/°C
V_N	Output Noise Voltage	f = 10Hz to 100kHz, T_A = +25°C		–	52.0	–	µV/V_O
RR	Ripple Rejection(6)	f = 120Hz, V_O = 11.5V to 21.5V		56.0	73.0	–	dB
V_{DROP}	Dropout Voltage	I_O = 1A, T_J = +25°C		–	2.0	–	V
r_O	Output Resistance(6)	f = 1kHz		–	17.0	–	mΩ
I_{SC}	Short Circuit Current	V_I = 35V, T_A = +25°C		–	230	–	mA
I_{PK}	Peak Current(6)	T_J = +25°C		–	2.2	–	A

Notes:

5. Load and line regulation are specified at constant junction temperature. Changes in V_O due to heating effects must be taken into account separately. Pulse testing with low duty is used.
6. These parameters, although guaranteed, are not 100% tested in production.

Electrical Characteristics (LM7809) (Continued)

Refer to the test circuits. -40°C < T_J < 125°C, I_O = 500mA, V_I = 15V, C_I = 0.33µF, C_O = 0.1µF, unless otherwise specified.

Symbol	Parameter	Conditions		Min.	Typ.	Max.	Unit
V_O	Output Voltage	T_J = +25°C		8.65	9.0	9.35	V
		5mA ≤ I_O ≤ 1A, P_O ≤ 15W, V_I = 11.5V to 24V		8.6	9.0	9.4	
Regline	Line Regulation(7)	T_J = +25°C	V_I = 11.5V to 25V	–	6.0	180	mV
			V_I = 12V to 17V	–	2.0	90.0	
Regload	Load Regulation(7)	T_J = +25°C	I_O = 5mA to 1.5A	–	12.0	180	mV
			I_O = 250mA to 750mA	–	4.0	90.0	
I_Q	Quiescent Current	T_J = +25°C		–	5.0	8.0	mA
ΔI_Q	Quiescent Current Change	I_O = 5mA to 1A		–	–	0.5	mA
		V_I = 11.5V to 26V		–	–	1.3	
$\Delta V_O/\Delta T$	Output Voltage Drift(8)	I_O = 5mA		–	-1.0	–	mV/°C
V_N	Output Noise Voltage	f = 10Hz to 100kHz, T_A = +25°C		–	58.0	–	µV/V_O
RR	Ripple Rejection(8)	f = 120Hz, V_O = 13V to 23V		56.0	71.0	–	dB
V_{DROP}	Dropout Voltage	I_O = 1A, T_J = +25°C		–	2.0	–	V
r_O	Output Resistance(8)	f = 1kHz		–	17.0	–	mΩ
I_{SC}	Short Circuit Current	V_I = 35V, T_A = +25°C		–	250	–	mA
I_{PK}	Peak Current(8)	T_J = +25°C		–	2.2	–	A

Notes:

7. Load and line regulation are specified at constant junction temperature. Changes in V_O due to heating effects must be taken into account separately. Pulse testing with low duty is used.
8. These parameters, although guaranteed, are not 100% tested in production.

Electrical Characteristics (LM7810) (Continued)

Refer to the test circuits. -40°C < T_J < 125°C, I_O = 500mA, V_I = 16V, C_I = 0.33µF, C_O = 0.1µF, unless otherwise specified.

Symbol	Parameter	Conditions		Min.	Typ.	Max.	Unit
V_O	Output Voltage	T_J = +25°C		9.6	10.0	10.4	V
		5mA ≤ I_O ≤ 1A, P_O ≤ 15W, V_I = 12.5V to 25V		9.5	10.0	10.5	
Regline	Line Regulation(9)	T_J = +25°C	V_I = 12.5V to 25V	–	10.0	200	mV
			V_I = 13V to 25V	–	3.0	100	
Regload	Load Regulation(9)	T_J = +25°C	I_O = 5mA to 1.5A	–	12.0	200	mV
			I_O = 250mA to 750mA	–	4.0	400	
I_Q	Quiescent Current	T_J = +25°C		–	5.1	8.0	mA
ΔI_Q	Quiescent Current Change	I_O = 5mA to 1A		–	–	0.5	mA
		V_I = 12.5V to 29V		–	–	1.0	
$\Delta V_O/\Delta T$	Output Voltage Drift(10)	I_O = 5mA		–	-1.0	–	mV/°C
V_N	Output Noise Voltage	f = 10Hz to 100kHz, T_A = +25°C		–	58.0	–	µV/V_O
RR	Ripple Rejection(10)	f = 120Hz, V_O = 13V to 23V		56.0	71.0	–	dB
V_{DROP}	Dropout Voltage	I_O = 1A, T_J = +25°C		–	2.0	–	V
r_O	Output Resistance(10)	f = 1kHz		–	17.0	–	mΩ
I_{SC}	Short Circuit Current	V_I = 35V, T_A = +25°C		–	250	–	mA
I_{PK}	Peak Current(10)	T_J = +25°C		–	2.2	–	A

Notes:

9. Load and line regulation are specified at constant junction temperature. Changes in V_O due to heating effects must be taken into account separately. Pulse testing with low duty is used.
10. These parameters, although guaranteed, are not 100% tested in production.

Electrical Characteristics (LM7812) (Continued)

Refer to the test circuits. -40°C < T_J < 125°C, I_O = 500mA, V_I = 19V, C_I = 0.33µF, C_O = 0.1µF, unless otherwise specified.

Symbol	Parameter	Conditions		Min.	Typ.	Max.	Unit
V_O	Output Voltage	T_J = +25°C		11.5	12.0	12.5	V
		5mA ≤ I_O ≤ 1A, P_O ≤ 15W, V_I = 14.5V to 27V		11.4	12.0	12.6	
Regline	Line Regulation(11)	T_J = +25°C	V_I = 14.5V to 30V	–	10.0	240	mV
			V_I = 16V to 22V	–	3.0	120	
Regload	Load Regulation(11)	T_J = +25°C	I_O = 5mA to 1.5A	–	11.0	240	mV
			I_O = 250mA to 750mA	–	5.0	120	
I_Q	Quiescent Current	T_J = +25°C		–	5.1	8.0	mA
ΔI_Q	Quiescent Current Change	I_O = 5mA to 1A		–	0.1	0.5	mA
		V_I = 14.5V to 30V		–	0.5	1.0	
$\Delta V_O/\Delta T$	Output Voltage Drift(12)	I_O = 5mA		–	-1.0	–	mV/°C
V_N	Output Noise Voltage	f = 10Hz to 100kHz, T_A = +25°C		–	76.0	–	µV/V_O
RR	Ripple Rejection(12)	f = 120Hz, V_I = 15V to 25V		55.0	71.0	–	dB
V_{DROP}	Dropout Voltage	I_O = 1A, T_J = +25°C		–	2.0	–	V
r_O	Output Resistance(12)	f = 1kHz		–	18.0	–	mΩ
I_{SC}	Short Circuit Current	V_I = 35V, T_A = +25°C		–	230	–	mA
I_{PK}	Peak Current(12)	T_J = +25°C		–	2.2	–	A

Notes:

11. Load and line regulation are specified at constant junction temperature. Changes in V_O due to heating effects must be taken into account separately. Pulse testing with low duty is used.
12. These parameters, although guaranteed, are not 100% tested in production.

Electrical Characteristics (LM7815) (Continued)

Refer to the test circuits. -40°C < T_J < 125°C, I_O = 500mA, V_I = 23V, C_I = 0.33µF, C_O = 0.1µF, unless otherwise specified.

Symbol	Parameter	Conditions		Min.	Typ.	Max.	Unit
V_O	Output Voltage	T_J = +25°C		14.4	15.0	15.6	V
		5mA ≤ I_O ≤ 1A, P_O ≤ 15W, V_I = 17.5V to 30V		14.25	15.0	15.75	
Regline	Line Regulation(13)	T_J = +25°C	V_I = 17.5V to 30V	–	11.0	300	mV
			V_I = 20V to 26V	–	3.0	150	
Regload	Load Regulation(13)	T_J = +25°C	I_O = 5mA to 1.5A	–	12.0	300	mV
			I_O = 250mA to 750mA	–	4.0	150	
I_Q	Quiescent Current	T_J = +25°C		–	5.2	8.0	mA
ΔI_Q	Quiescent Current Change	I_O = 5mA to 1A		–	–	0.5	mA
		V_I = 17.5V to 30V		–	–	1.0	
$\Delta V_O/\Delta T$	Output Voltage Drift(14)	I_O = 5mA		–	-1.0	–	mV/°C
V_N	Output Noise Voltage	f = 10Hz to 100kHz, T_A = +25°C		–	90.0	–	µV/V_O
RR	Ripple Rejection(14)	f = 120Hz, V_I = 18.5V to 28.5V		54.0	70.0	–	dB
V_{DROP}	Dropout Voltage	I_O = 1A, T_J = +25°C		–	2.0	–	V
r_O	Output Resistance(14)	f = 1kHz		–	19.0	–	mΩ
I_{SC}	Short Circuit Current	V_I = 35V, T_A = +25°C		–	250	–	mA
I_{PK}	Peak Current(14)	T_J = +25°C		–	2.2	–	A

Notes:

13. Load and line regulation are specified at constant junction temperature. Changes in V_O due to heating effects must be taken into account separately. Pulse testing with low duty is used.
14. These parameters, although guaranteed, are not 100% tested in production.

Electrical Characteristics (LM7818) (Continued)

Refer to the test circuits. -40°C < T_J < 125°C, I_O = 500mA, V_I = 27V, C_I = 0.33µF, C_O = 0.1µF, unless otherwise specified.

Symbol	Parameter	Conditions		Min.	Typ.	Max.	Unit
V_O	Output Voltage	T_J = +25°C		17.3	18.0	18.7	V
		5mA ≤ I_O ≤ 1A, P_O ≤ 15W, V_I = 21V to 33V		17.1	18.0	18.9	
Regline	Line Regulation(15)	T_J = +25°C	V_I = 21V to 33V	–	15.0	360	mV
			V_I = 24V to 30V	–	5.0	180	
Regload	Load Regulation(15)	T_J = +25°C	I_O = 5mA to 1.5A	–	15.0	360	mV
			I_O = 250mA to 750mA	–	5.0	180	
I_Q	Quiescent Current	T_J = +25°C		–	5.2	8.0	mA
ΔI_Q	Quiescent Current Change	I_O = 5mA to 1A		–	–	0.5	mA
		V_I = 21V to 33V		–	–	1.0	
$\Delta V_O/\Delta T$	Output Voltage Drift(16)	I_O = 5mA		–	-1.0	–	mV/°C
V_N	Output Noise Voltage	f = 10Hz to 100kHz, T_A = +25°C		–	110	–	µV/V_O
RR	Ripple Rejection(16)	f = 120Hz, V_I = 22V to 32V		53.0	69.0	–	dB
V_{DROP}	Dropout Voltage	I_O = 1A, T_J = +25°C		–	2.0	–	V
r_O	Output Resistance(16)	f = 1kHz		–	22.0	–	mΩ
I_{SC}	Short Circuit Current	V_I = 35V, T_A = +25°C		–	250	–	mA
I_{PK}	Peak Current(16)	T_J = +25°C		–	2.2	–	A

Notes:

15. Load and line regulation are specified at constant junction temperature. Changes in V_O due to heating effects must be taken into account separately. Pulse testing with low duty is used.
16. These parameters, although guaranteed, are not 100% tested in production.

Electrical Characteristics (LM7824) (Continued)

Refer to the test circuits. -40°C < T_J < 125°C, I_O = 500mA, V_I = 33V, C_I = 0.33µF, C_O = 0.1µF, unless otherwise specified.

Symbol	Parameter	Conditions		Min.	Typ.	Max.	Unit
V_O	Output Voltage	T_J = +25°C		23.0	24.0	25.0	V
		5mA ≤ I_O ≤ 1A, P_O ≤ 15W, V_I = 27V to 38V		22.8	24.0	25.25	
Regline	Line Regulation(17)	T_J = +25°C	V_I = 27V to 38V	–	17.0	480	mV
			V_I = 30V to 36V	–	6.0	240	
Regload	Load Regulation(17)	T_J = +25°C	I_O = 5mA to 1.5A	–	15.0	480	mV
			I_O = 250mA to 750mA	–	5.0	240	
I_Q	Quiescent Current	T_J = +25°C		–	5.2	8.0	mA
ΔI_Q	Quiescent Current Change	I_O = 5mA to 1A		–	0.1	0.5	mA
		V_I = 27V to 38V		–	0.5	1.0	
$\Delta V_O/\Delta T$	Output Voltage Drift(18)	I_O = 5mA		–	-1.5	–	mV/°C
V_N	Output Noise Voltage	f = 10Hz to 100kHz, T_A = +25°C		–	60.0	–	µV/V_O
RR	Ripple Rejection(18)	f = 120Hz, V_I = 28V to 38V		50.0	67.0	–	dB
V_{DROP}	Dropout Voltage	I_O = 1A, T_J = +25°C		–	2.0	–	V
rO	Output Resistance(18)	f = 1kHz		–	28.0	–	mΩ
I_{SC}	Short Circuit Current	V_I = 35V, T_A = +25°C		–	230	–	mA
I_{PK}	Peak Current(18)	T_J = +25°C		–	2.2	–	A

Notes:

17. Load and line regulation are specified at constant junction temperature. Changes in V_O due to heating effects must be taken into account separately. Pulse testing with low duty is used.
18. These parameters, although guaranteed, are not 100% tested in production.

Electrical Characteristics (LM7805A) (Continued)

Refer to the test circuits. 0°C < T_J < 125°C, I_O = 1A, V_I = 10V, C_I = 0.33µF, C_O = 0.1µF, unless otherwise specified.

Symbol	Parameter	Conditions		Min.	Typ.	Max.	Unit
V_O	Output Voltage	T_J = +25°C		4.9	5.0	5.1	V
		I_O = 5mA to 1A, $P_O \leq$ 15W, V_I = 7.5V to 20V		4.8	5.0	5.2	
Regline	Line Regulation(19)	V_I = 7.5V to 25V, I_O = 500mA		–	5.0	50.0	mV
		V_I = 8V to 12V		–	3.0	50.0	
		T_J = +25°C	V_I = 7.3V to 20V	–	5.0	50.0	
			V_I = 8V to 12V	–	1.5	25.0	
Regload	Load Regulation(19)	T_J = +25°C, I_O = 5mA to 1.5A		–	9.0	100	mV
		I_O = 5mA to 1A		–	9.0	100	
		I_O = 250mA to 750mA		–	4.0	50.0	
I_Q	Quiescent Current	T_J = +25°C		–	5.0	6.0	mA
ΔI_Q	Quiescent Current Change	I_O = 5mA to 1A		–	–	0.5	mA
		V_I = 8V to 25V, I_O = 500mA		–	–	0.8	
		V_I = 7.5V to 20V, T_J = +25°C		–	–	0.8	
$\Delta V_O/\Delta T$	Output Voltage Drift(20)	I_O = 5mA		–	-0.8	–	mV/°C
V_N	Output Noise Voltage	f = 10Hz to 100kHz, T_A = +25°C		–	10.0	–	µV/V_O
RR	Ripple Rejection(20)	f = 120Hz, I_O = 500mA, V_I = 8V to 18V		–	68.0	–	dB
V_{DROP}	Dropout Voltage	I_O = 1A, T_J = +25°C		–	2.0	–	V
r_O	Output Resistance(20)	f = 1kHz		–	17.0	–	mΩ
I_{SC}	Short Circuit Current	V_I = 35V, T_A = +25°C		–	250	–	mA
I_{PK}	Peak Current(20)	T_J = +25°C		–	2.2	–	A

Notes:

19. Load and line regulation are specified at constant junction temperature. Changes in V_O due to heating effects must be taken into account separately. Pulse testing with low duty is used.
20. These parameters, although guaranteed, are not 100% tested in production.

Electrical Characteristics (LM7806A) (Continued)

Refer to the test circuits. 0°C < T_J < 125°C, I_O = 1A, V_I = 11V, C_I = 0.33µF, C_O = 0.1µF, unless otherwise specified.

Symbol	Parameter	Conditions		Min.	Typ.	Max.	Unit
V_O	Output Voltage	T_J = +25°C		5.58	6.0	6.12	V
		I_O = 5mA to 1A, P_O ≤ 15W, V_I = 8.6V to 21V		5.76	6.0	6.24	
Regline	Line Regulation(21)	V_I = 8.6V to 25V, I_O = 500mA		–	5.0	60.0	mV
		V_I = 9V to 13V		–	3.0	60.0	
		T_J = +25°C	V_I = 8.3V to 21V	–	5.0	60.0	
			V_I = 9V to 13V	–	1.5	30.0	
Regload	Load Regulation(21)	T_J = +25°C, I_O = 5mA to 1.5A		–	9.0	100	mV
		I_O = 5mA to 1A		–	9.0	100	
		I_O = 250mA to 750mA		–	5.0	50.0	
I_Q	Quiescent Current	T_J = +25°C		–	4.3	6.0	mA
ΔI_Q	Quiescent Current Change	I_O = 5mA to 1A		–	–	0.5	mA
		V_I = 19V to 25V, I_O = 500mA		–	–	0.8	
		V_I = 8.5V to 21V, T_J = +25°C		–	–	0.8	
$\Delta V_O/\Delta T$	Output Voltage Drift(22)	I_O = 5mA		–	-0.8	–	mV/°C
V_N	Output Noise Voltage	f = 10Hz to 100kHz, T_A = +25°C		–	10.0	–	µV/V_O
RR	Ripple Rejection(22)	f = 120Hz, I_O = 500mA, V_I = 9V to 19V		–	65.0	–	dB
V_{DROP}	Dropout Voltage	I_O = 1A, T_J = +25°C		–	2.0	–	V
r_O	Output Resistance(22)	f = 1kHz		–	17.0	–	mΩ
I_{SC}	Short Circuit Current	V_I = 35V, T_A = +25°C		–	250	–	mA
I_{PK}	Peak Current(22)	T_J = +25°C		–	2.2	–	A

Notes:

21. Load and line regulation are specified at constant junction temperature. Changes in V_O due to heating effects must be taken into account separately. Pulse testing with low duty is used.
22. These parameters, although guaranteed, are not 100% tested in production.

Electrical Characteristics (LM7808A) (Continued)

Refer to the test circuits. 0°C < T_J < 125°C, I_O = 1A, V_I = 14V, C_I = 0.33µF, C_O = 0.1µF, unless otherwise specified.

Symbol	Parameter	Conditions		Min.	Typ.	Max.	Unit
V_O	Output Voltage	T_J = +25°C		7.84	8.0	8.16	V
		I_O = 5mA to 1A, $P_O \leq$ 15W, V_I = 10.6V to 23V		7.7	8.0	8.3	
Regline	Line Regulation(23)	V_I = 10.6V to 25V, I_O = 500mA		–	6.0	80.0	mV
		V_I = 11V to 17V		–	3.0	80.0	
		T_J = +25°C	V_I = 10.4V to 23V	–	6.0	80.0	
			V_I = 11V to 17V	–	2.0	40.0	
Regload	Load Regulation(23)	T_J = +25°C, I_O = 5mA to 1.5A		–	12.0	100	mV
		I_O = 5mA to 1A		–	12.0	100	
		I_O = 250mA to 750mA		–	5.0	50.0	
I_Q	Quiescent Current	T_J = +25°C		–	5.0	6.0	mA
ΔI_Q	Quiescent Current Change	I_O = 5mA to 1A		–	–	0.5	mA
		V_I = 11V to 25V, I_O = 500mA		–	–	0.8	
		V_I = 10.6V to 23V, T_J = +25°C		–	–	0.8	
$\Delta V_O/\Delta T$	Output Voltage Drift(24)	I_O = 5mA		–	-0.8	–	mV/°C
V_N	Output Noise Voltage	f = 10Hz to 100kHz, T_A = +25°C		–	10.0	–	µV/V_O
RR	Ripple Rejection(24)	f = 120Hz, I_O = 500mA, V_I = 11.5V to 21.5V		–	62.0	–	dB
V_{DROP}	Dropout Voltage	I_O = 1A, T_J = +25°C		–	2.0	–	V
r_O	Output Resistance(24)	f = 1kHz		–	18.0	–	mΩ
I_{SC}	Short Circuit Current	V_I = 35V, T_A = +25°C		–	250	–	mA
I_{PK}	Peak Current(24)	T_J = +25°C		–	2.2	–	A

Notes:

23. Load and line regulation are specified at constant junction temperature. Changes in V_O due to heating effects must be taken into account separately. Pulse testing with low duty is used.
24. These parameters, although guaranteed, are not 100% tested in production.

Electrical Characteristics (LM7809A) (Continued)

Refer to the test circuits. 0°C < T_J < 125°C, I_O = 1A, V_I = 15V, C_I = 0.33µF, C_O = 0.1µF, unless otherwise specified.

Symbol	Parameter	Conditions		Min.	Typ.	Max.	Units
V_O	Output Voltage	T_J = +25°C		8.82	9.0	9.16	V
		I_O = 5mA to 1A, $P_O \leq$ 15W, V_I = 11.2V to 24V		8.65	9.0	9.35	
Regline	Line Regulation(25)	V_I = 11.7V to 25V, I_O = 500mA		–	6.0	90.0	mV
		V_I = 12.5V to 19V		–	4.0	45.0	
		T_J = +25°C	V_I = 11.5V to 24V	–	6.0	90.0	
			V_I = 12.5V to 19V	–	2.0	45.0	
Regload	Load Regulation(25)	T_J = +25°C, I_O = 5mA to 1.5A		–	12.0	100	mV
		I_O = 5mA to 1A		–	12.0	100	
		I_O = 250mA to 750mA		–	5.0	50.0	
I_Q	Quiescent Current	T_J = +25°C		–	5.0	6.0	mA
ΔI_Q	Quiescent Current Change	I_O = 5mA to 1A		–	–	0.5	mA
		V_I = 12V to 25V, I_O = 500mA		–	–	0.8	
		V_I = 11.7V to 25V, T_J = +25°C		–	–	0.8	
$\Delta V_O/\Delta T$	Output Voltage Drift(26)	I_O = 5mA		–	-1.0	–	mV/°C
V_N	Output Noise Voltage	f = 10Hz to 100kHz, T_A = +25°C		–	10.0	–	µV/V_O
RR	Ripple Rejection(26)	f = 120Hz, I_O = 500mA, V_I = 12V to 22V		–	62.0	–	dB
V_{DROP}	Dropout Voltage	I_O = 1A, T_J = +25°C		–	2.0	–	V
r_O	Output Resistance(26)	f = 1kHz		–	17.0	–	mΩ
I_{SC}	Short Circuit Current	V_I = 35V, T_A = +25°C		–	250	–	mA
I_{PK}	Peak Current(26)	T_J = +25°C		–	2.2	–	A

Notes:

25. Load and line regulation are specified at constant junction temperature. Changes in V_O due to heating effects must be taken into account separately. Pulse testing with low duty is used.
26. These parameters, although guaranteed, are not 100% tested in production.

Electrical Characteristics (LM7810A) (Continued)

Refer to the test circuits. 0°C < T_J < 125°C, I_O = 1A, V_I = 16V, C_I = 0.33µF, C_O = 0.1µF, unless otherwise specified.

Symbol	Parameter	Conditions		Min.	Typ.	Max.	Units
V_O	Output Voltage	T_J = +25°C		9.8	10.0	10.2	V
		I_O = 5mA to 1A, $P_O \leq$ 15W, V_I = 12.8V to 25V		9.6	10.0	10.4	
Regline	Line Regulation(27)	V_I = 12.8V to 26V, I_O = 500mA		–	8.0	100	mV
		V_I = 13V to 20V		–	4.0	50.0	
		T_J = +25°C	V_I = 12.5V to 25V	–	8.0	100	
			V_I = 13V to 20V	–	3.0	50.0	
Regload	Load Regulation(27)	T_J = +25°C, I_O = 5mA to 1.5A		–	12.0	100	mV
		I_O = 5mA to 1A		–	12.0	100	
		I_O = 250mA to 750mA		–	5.0	50.0	
I_Q	Quiescent Current	T_J = +25°C		–	5.0	6.0	mA
ΔI_Q	Quiescent Current Change	I_O = 5mA to 1A		–	–	0.5	mA
		V_I = 12.8V to 25V, I_O = 500mA		–	–	0.8	
		V_I = 13V to 26V, T_J = +25°C		–	–	0.5	
$\Delta V_O/\Delta T$	Output Voltage Drift(28)	I_O = 5mA		–	-1.0	–	mV/°C
V_N	Output Noise Voltage	f = 10Hz to 100kHz, T_A = +25°C		–	10.0	–	µV/V_O
RR	Ripple Rejection(28)	f = 120Hz, I_O = 500mA, V_I = 14V to 24V		–	62.0	–	dB
V_{DROP}	Dropout Voltage	I_O = 1A, T_J = +25°C		–	2.0	–	V
r_O	Output Resistance(28)	f = 1kHz		–	17.0	–	mΩ
I_{SC}	Short Circuit Current	V_I = 35V, T_A = +25°C		–	250	–	mA
I_{PK}	Peak Current(28)	T_J = +25°C		–	2.2	–	A

Notes:

27. Load and line regulation are specified at constant junction temperature. Changes in V_O due to heating effects must be taken into account separately. Pulse testing with low duty is used.
28. These parameters, although guaranteed, are not 100% tested in production.

Electrical Characteristics (LM7812A) (Continued)

Refer to the test circuits. 0°C < T_J < 125°C, I_O = 1A, V_I = 19V, C_I = 0.33µF, C_O = 0.1µF, unless otherwise specified.

Symbol	Parameter	Conditions		Min.	Typ.	Max.	Units
V_O	Output Voltage	T_J = +25°C		11.75	12.0	12.25	V
		I_O = 5mA to 1A, $P_O \leq$ 15W, V_I = 14.8V to 27V		11.5	12.0	12.5	
Regline	Line Regulation(29)	V_I = 14.8V to 30V, I_O = 500mA		–	10.0	120	mV
		V_I = 16V to 22V		–	4.0	120	
		T_J = +25°C	V_I = 14.5V to 27V	–	10.0	120	
			V_I = 16V to 22V	–	3.0	60.0	
Regload	Load Regulation(29)	T_J = +25°C, I_O = 5mA to 1.5A		–	12.0	100	mV
		I_O = 5mA to 1A		–	12.0	100	
		I_O = 250mA to 750mA		–	5.0	50.0	
I_Q	Quiescent Current	T_J = +25°C		–	5.1	6.0	mA
ΔI_Q	Quiescent Current Change	I_O = 5mA to 1A		–	–	0.5	mA
		V_I = 14V to 27V, I_O = 500mA		–	–	0.8	
		V_I = 15V to 30V, T_J = +25°C		–	–	0.8	
$\Delta V_O/\Delta T$	Output Voltage Drift(30)	I_O = 5mA		–	-1.0	–	mV/°C
V_N	Output Noise Voltage	f = 10Hz to 100kHz, T_A = +25°C		–	10.0	–	µV/V_O
RR	Ripple Rejection(30)	f = 120Hz, I_O = 500mA, V_I = 14V to 24V		–	60.0	–	dB
V_{DROP}	Dropout Voltage	I_O = 1A, T_J = +25°C		–	2.0	–	V
r_O	Output Resistance(30)	f = 1kHz		–	18.0	–	mΩ
I_{SC}	Short Circuit Current	V_I = 35V, T_A = +25°C		–	250	–	mA
I_{PK}	Peak Current(30)	T_J = +25°C		–	2.2	–	A

Note:

29. Load and line regulation are specified at constant junction temperature. Changes in V_O due to heating effects must be taken into account separately. Pulse testing with low duty is used.
30. These parameters, although guaranteed, are not 100% tested in production.

Electrical Characteristics (LM7815A) (Continued)

Refer to the test circuits. 0°C < T_J < 125°C, I_O = 1A, V_I = 23V, C_I = 0.33µF, C_O = 0.1µF, unless otherwise specified.

Symbol	Parameter	Conditions		Min.	Typ.	Max.	Units
V_O	Output Voltage	T_J = +25°C		14.75	15.0	15.3	V
		I_O = 5mA to 1A, $P_O \leq$ 15W, V_I = 17.7V to 30V		14.4	15.0	15.6	
Regline	Line Regulation(31)	V_I = 17.4V to 30V, I_O = 500mA		–	10.0	150	mV
		V_I = 20V to 26V		–	5.0	150	
		T_J = +25°C	V_I = 17.5V to 30V	–	11.0	150	
			V_I = 20V to 26V	–	3.0	75.0	
Regload	Load Regulation(31)	T_J = +25°C, I_O = 5mA to 1.5A		–	12.0	100	mV
		I_O = 5mA to 1A		–	12.0	100	
		I_O = 250mA to 750mA		–	5.0	50.0	
I_Q	Quiescent Current	T_J = +25°C		–	5.2	6.0	mA
ΔI_Q	Quiescent Current Change	I_O = 5mA to 1A		–	–	0.5	mA
		V_I = 17.5V to 30V, I_O = 500mA		–	–	0.8	
		V_I = 17.5V to 30V, T_J = +25°C		–	–	0.8	
$\Delta V_O/\Delta T$	Output Voltage Drift(32)	I_O = 5mA		–	-1.0	–	mV/°C
V_N	Output Noise Voltage	f = 10Hz to 100kHz, T_A = +25°C		–	10.0	–	µV/V_O
RR	Ripple Rejection(32)	f = 120Hz, I_O = 500mA, V_I = 18.5V to 28.5V		–	58.0	–	dB
V_{DROP}	Dropout Voltage	I_O = 1A, T_J = +25°C		–	2.0	–	V
r_O	Output Resistance(32)	f = 1kHz		–	19.0	–	mΩ
I_{SC}	Short Circuit Current	V_I = 35V, T_A = +25°C		–	250	–	mA
I_{PK}	Peak Current(32)	T_J = +25°C		–	2.2	–	A

Notes:

31. Load and line regulation are specified at constant junction temperature. Changes in V_O due to heating effects must be taken into account separately. Pulse testing with low duty is used.
32. These parameters, although guaranteed, are not 100% tested in production.

Electrical Characteristics (LM7818A) (Continued)

Refer to the test circuits. 0°C < T_J < 125°C, I_O = 1A, V_I = 27V, C_I = 0.33µF, C_O = 0.1µF, unless otherwise specified.

Symbol	Parameter	Conditions		Min.	Typ.	Max.	Units
V_O	Output Voltage	T_J = +25°C		17.64	18.0	18.36	V
		I_O = 5mA to 1A, $P_O \leq$ 15W, V_I = 21V to 33V		17.3	18.0	18.7	
Regline	Line Regulation(33)	V_I = 21V to 33V, I_O = 500mA		–	15.0	180	mV
		V_I = 21V to 33V		–	5.0	180	
		T_J = +25°C	V_I = 20.6V to 33V	–	15.0	180	
			V_I = 24V to 30V	–	5.0	90.0	
Regload	Load Regulation(33)	T_J = +25°C, I_O = 5mA to 1.5A		–	15.0	100	mV
		I_O = 5mA to 1A		–	15.0	100	
		I_O = 250mA to 750mA		–	7.0	50.0	
I_Q	Quiescent Current	T_J = +25°C		–	5.2	6.0	mA
ΔI_Q	Quiescent Current Change	I_O = 5mA to 1A		–	–	0.5	mA
		V_I = 12V to 33V, I_O = 500mA		–	–	0.8	
		V_I = 12V to 33V, T_J = +25°C		–	–	0.8	
$\Delta V_O/\Delta T$	Output Voltage Drift(34)	I_O = 5mA		–	-1.0	–	mV/°C
V_N	Output Noise Voltage	f = 10Hz to 100kHz, T_A = +25°C		–	10.0	–	µV/V_O
RR	Ripple Rejection(34)	f = 120Hz, I_O = 500mA, V_I = 22V to 32V		–	57.0	–	dB
V_{DROP}	Dropout Voltage	I_O = 1A, T_J = +25°C		–	2.0	–	V
r_O	Output Resistance(34)	f = 1kHz		–	19.0	–	mΩ
I_{SC}	Short Circuit Current	V_I = 35V, T_A = +25°C		–	250	–	mA
I_{PK}	Peak Current(34)	T_J = +25°C		–	2.2	–	A

Notes:

33. Load and line regulation are specified at constant junction temperature. Changes in V_O due to heating effects must be taken into account separately. Pulse testing with low duty is used.
34. These parameters, although guaranteed, are not 100% tested in production.

Electrical Characteristics (LM7824A) (Continued)

Refer to the test circuits. 0°C < T_J < 125°C, I_O = 1A, V_I = 33V, C_I = 0.33µF, C_O = 0.1µF, unless otherwise specified.

Symbol	Parameter	Conditions		Min.	Typ.	Max.	Units
V_O	Output Voltage	T_J = +25°C		23.5	24.0	24.5	V
		I_O = 5mA to 1A, $P_O \leq$ 15W, V_I = 27.3V to 38V		23.0	24.0	25.0	
Regline	Line Regulation(35)	V_I = 27V to 38V, I_O = 500mA		–	18.0	240	mV
		V_I = 21V to 33V		–	6.0	240	
		T_J = +25°C	V_I = 26.7V to 38V	–	18.0	240	
			V_I = 30V to 36V	–	6.0	120	
Regload	Load Regulation(35)	T_J = +25°C, I_O = 5mA to 1.5A		–	15.0	100	mV
		I_O = 5mA to 1A		–	15.0	100	
		I_O = 250mA to 750mA		–	7.0	50.0	
I_Q	Quiescent Current	T_J = +25°C		–	5.2	6.0	mA
ΔI_Q	Quiescent Current Change	I_O = 5mA to 1A		–	–	0.5	mA
		V_I = 27.3V to 38V, I_O = 500mA		–	–	0.8	
		V_I = 27.3V to 38V, T_J = +25°C		–	–	0.8	
$\Delta V_O/\Delta T$	Output Voltage Drift(36)	I_O = 5mA		–	-1.5	–	mV/°C
V_N	Output Noise Voltage	f = 10Hz to 100kHz, T_A = +25°C		–	10.0	–	µV/V_O
RR	Ripple Rejection(36)	f = 120Hz, I_O = 500mA, V_I = 28V to 38V		–	54.0	–	dB
V_{DROP}	Dropout Voltage	I_O = 1A, T_J = +25°C		–	2.0	–	V
r_O	Output Resistance(36)	f = 1kHz		–	20.0	–	mΩ
I_{SC}	Short Circuit Current	V_I = 35V, T_A = +25°C		–	250	–	mA
I_{PK}	Peak Current(36)	T_J = +25°C		–	2.2	–	A

Notes:

35. Load and line regulation are specified at constant junction temperature. Changes in V_O due to heating effects must be taken into account separately. Pulse testing with low duty is used.
36. These parameters, although guaranteed, are not 100% tested in production.

Typical Performance Characteristics

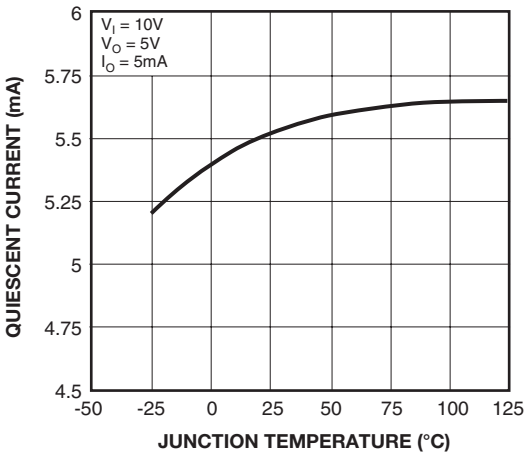

Figure 3. Quiescent Current

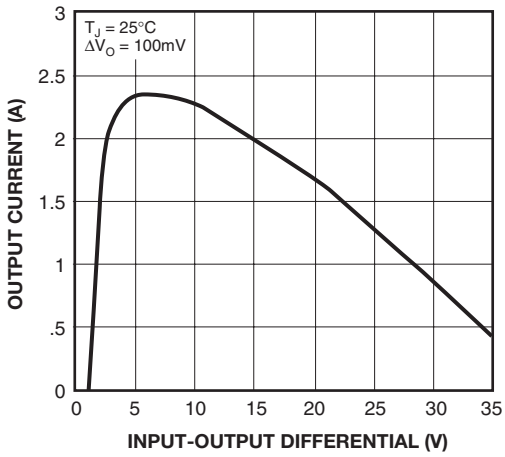

Figure 4. Peak Output Current

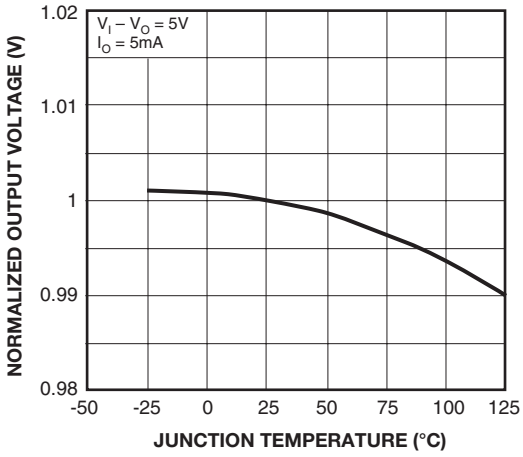

Figure 5. Output Voltage

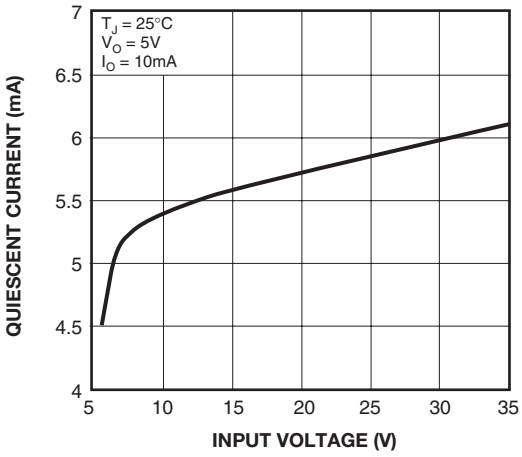

Figure 6. Quiescent Current

Typical Applications

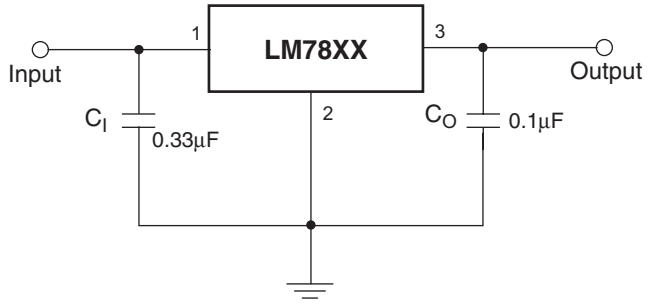

Figure 7. DC Parameters

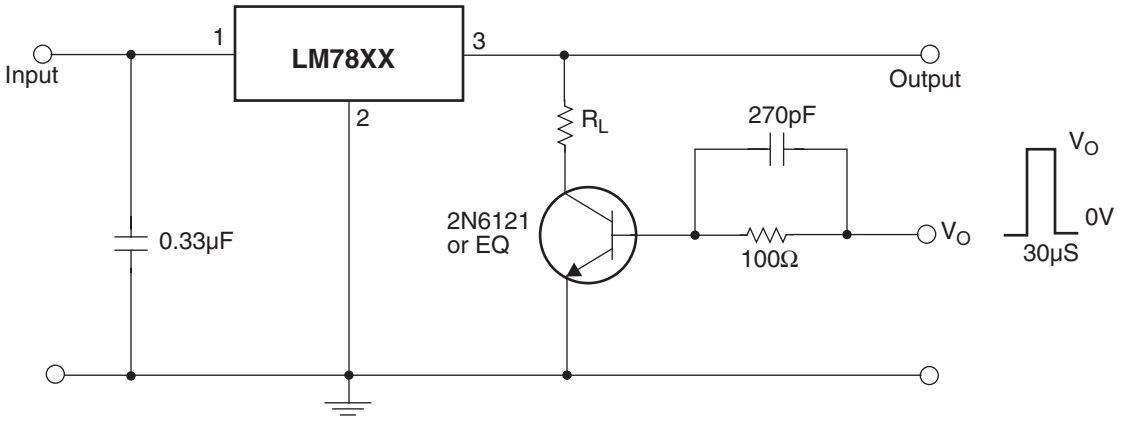

Figure 8. Load Regulation

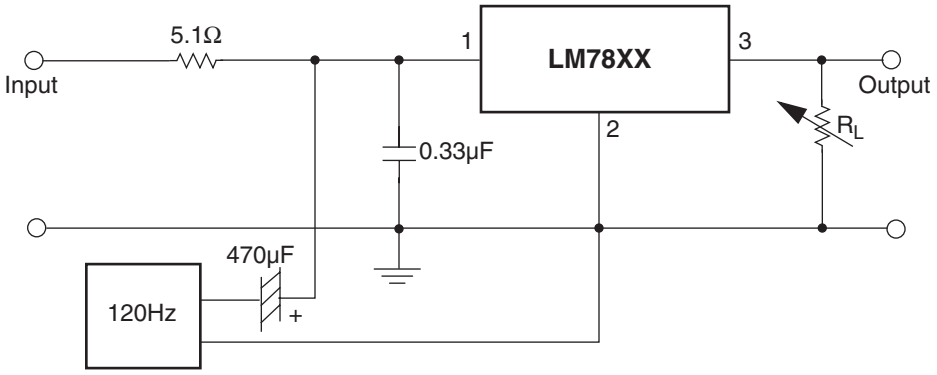

Figure 9. Ripple Rejection

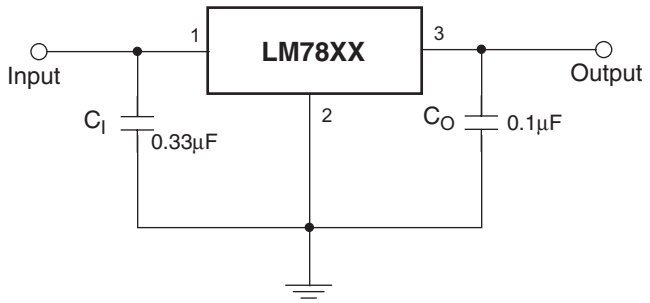

Figure 10. Fixed Output Regulator

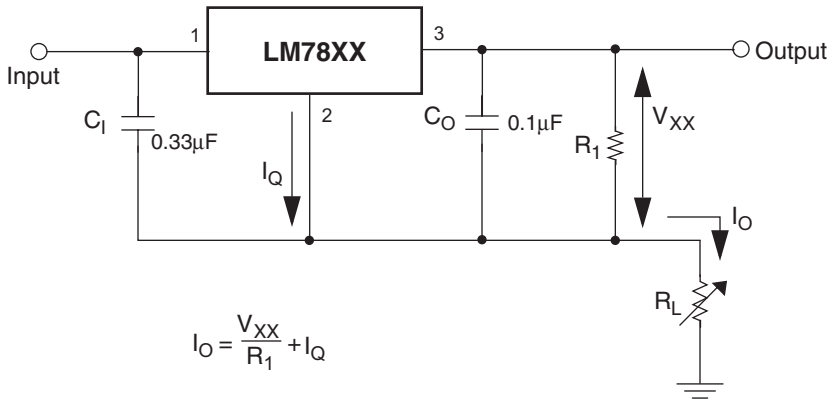

Notes:

1. To specify an output voltage, substitute voltage value for "XX." A common ground is required between the input and the output voltage. The input voltage must remain typically 2.0V above the output voltage even during the low point on the input ripple voltage.
2. C_I is required if regulator is located an appreciable distance from power supply filter.
3. C_O improves stability and transient response.

Figure 11.

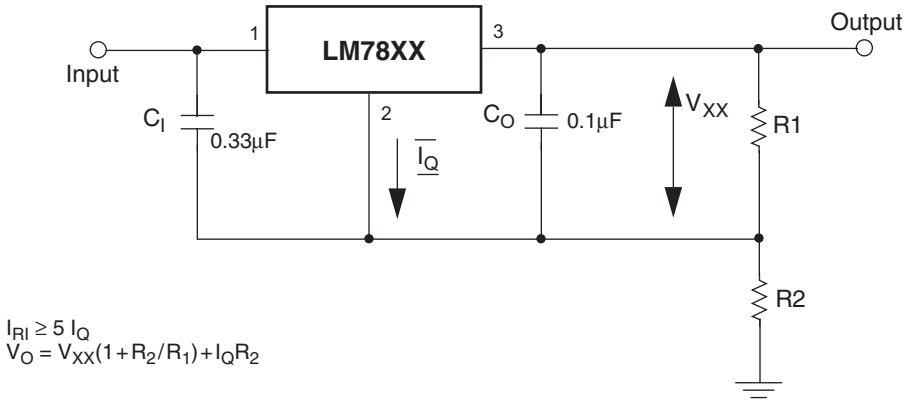

Figure 12. Circuit for Increasing Output Voltage

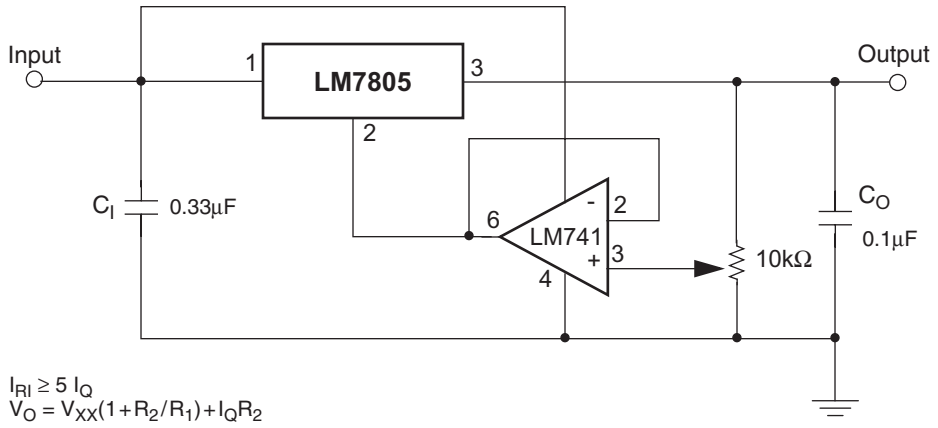

Figure 13. Adjustable Output Regulator (7V to 30V)

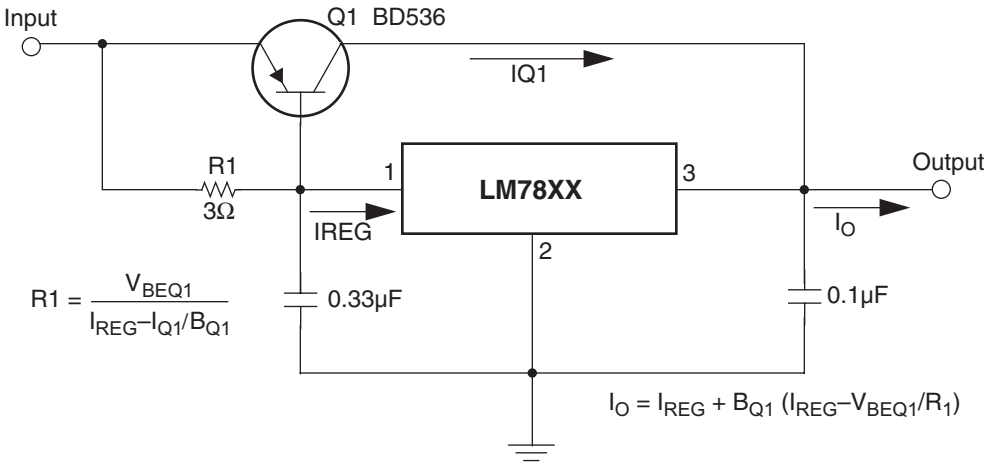

Figure 14. High Current Voltage Regulator

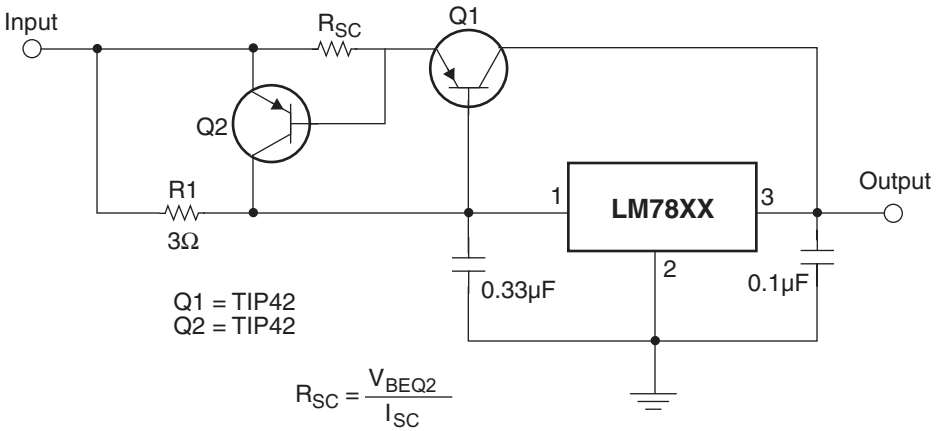

Figure 15. High Output Current with Short Circuit Protection

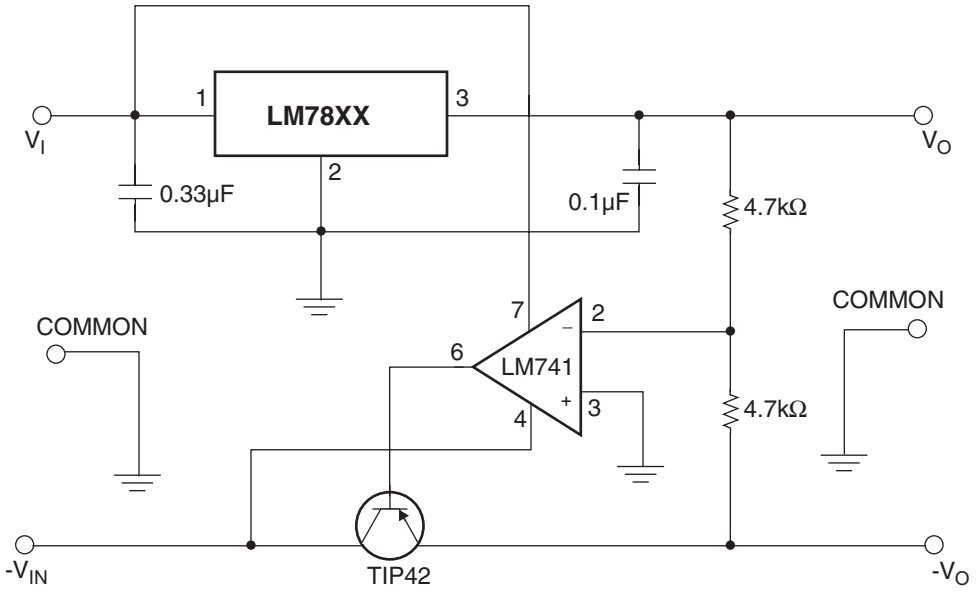

Figure 16. Tracking Voltage Regulator

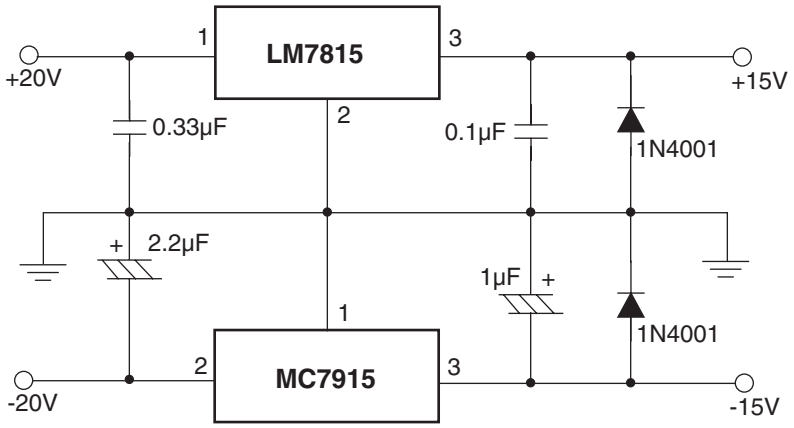

Figure 17. Split Power Supply (±15V – 1A)

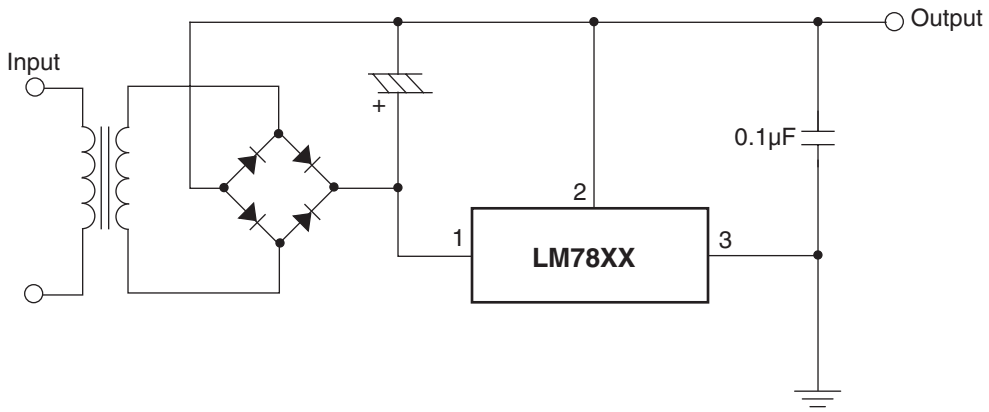

Figure 18. Negative Output Voltage Circuit

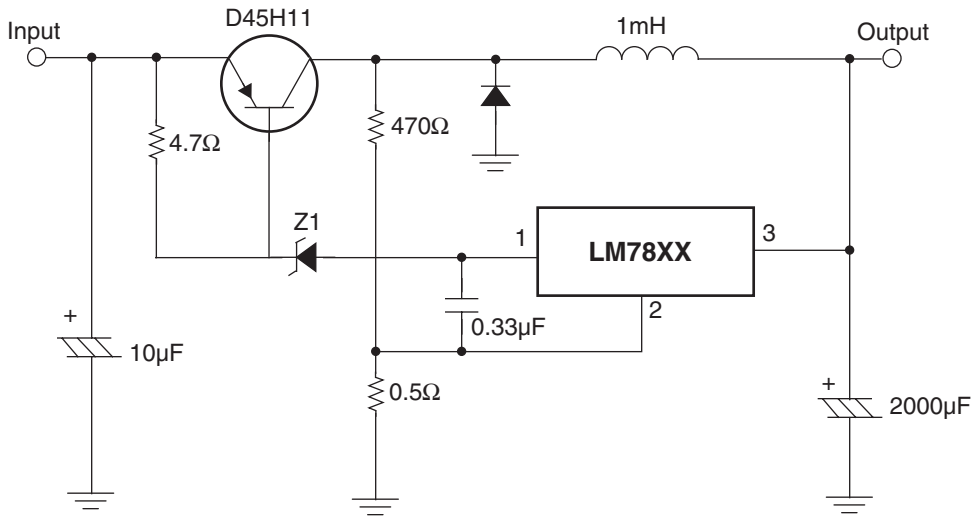

Figure 19. Switching Regulator

Mechanical Dimensions

Dimensions in millimeters

TO-220 [SINGLE GAUGE]

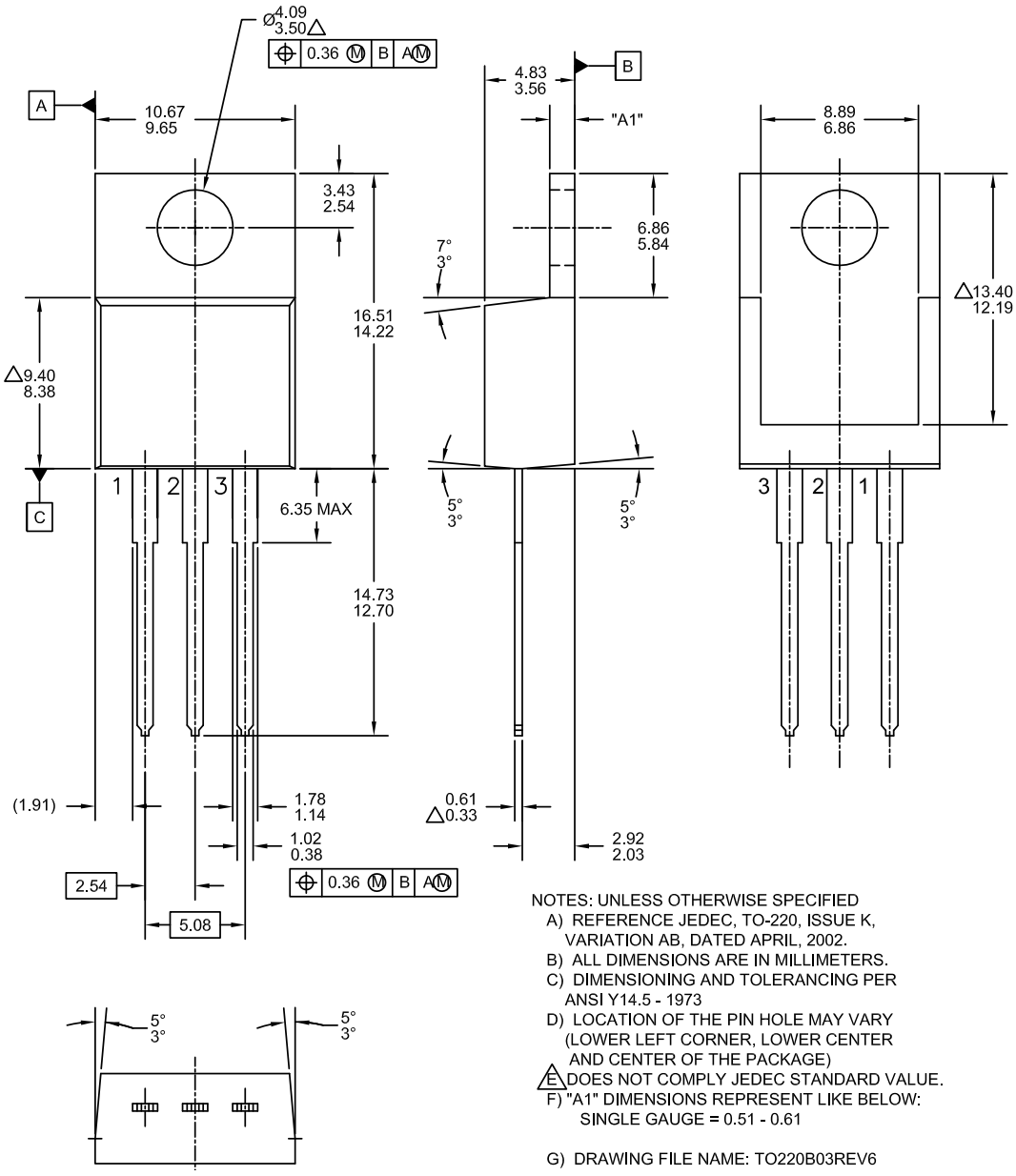

NOTES: UNLESS OTHERWISE SPECIFIED

A) REFERENCE JEDEC, TO-220, ISSUE K, VARIATION AB, DATED APRIL, 2002.

B) ALL DIMENSIONS ARE IN MILLIMETERS.

C) DIMENSIONING AND TOLERANCING PER ANSI Y14.5 - 1973

D) LOCATION OF THE PIN HOLE MAY VARY (LOWER LEFT CORNER, LOWER CENTER AND CENTER OF THE PACKAGE)

△E DOES NOT COMPLY JEDEC STANDARD VALUE.

F) "A1" DIMENSIONS REPRESENT LIKE BELOW: SINGLE GAUGE = 0.51 - 0.61

G) DRAWING FILE NAME: TO220B03REV6

FAIRCHILD SEMICONDUCTOR®

TRADEMARKS

The following includes registered and unregistered trademarks and service marks, owned by Fairchild Semiconductor and/or its global subsidiaries, and is not intended to be an exhaustive list of all such trademarks.

2Cool™
AccuPower™
AX-CAP™*
BitSiC™
Build it Now™
CorePLUS™
CorePOWER™
CROSSVOLT™
CTL™
Current Transfer Logic™
DEUXPEED®
Dual Cool™
EcoSPARK®
EfficientMax™
ESBC™
F®
Fairchild®
Fairchild Semiconductor®
FACT Quiet Series™
FACT®
FAST®
FastvCore™
FETBench™
FlashWriter®*
FPS™
F-PFS™
FRFET®
Global Power Resource℠
GreenBridge™
Green FPS™
Green FPS™ e-Series™
G*max*™
GTO™
IntelliMAX™
ISOPLANAR™
Making Small Speakers Sound Louder and Better™
MegaBuck™
MICROCOUPLER™
MicroFET™
MicroPak™
MicroPak2™
MillerDrive™
MotionMax™
Motion-SPM™
mWSaver™
OptoHiT™
OPTOLOGIC®
OPTOPLANAR®
PowerTrench®
PowerXS™
Programmable Active Droop™
QFET®
QS™
Quiet Series™
RapidConfigure™
™
Saving our world, 1mW/W/kW at a time™
SignalWise™
SmartMax™
SMART START™
Solutions for Your Success™
SPM®
STEALTH™
SuperFET®
SuperSOT™-3
SuperSOT™-6
SuperSOT™-8
SupreMOS®
SyncFET™
Sync-Lock™
SYSTEM GENERAL®*
The Power Franchise®
the power franchise
TinyBoost™
TinyBuck™
TinyCalc™
TinyLogic®
TINYOPTO™
TinyPower™
TinyPWM™
TinyWire™
TranSiC™
TriFault Detect™
TRUECURRENT®*
µSerDes™
µSerDes™
UHC®
Ultra FRFET™
UniFET™
VCX™
VisualMax™
VoltagePlus™
XS™

* Trademarks of System General Corporation, used under license by Fairchild Semiconductor.

DISCLAIMER

FAIRCHILD SEMICONDUCTOR RESERVES THE RIGHT TO MAKE CHANGES WITHOUT FURTHER NOTICE TO ANY PRODUCTS HEREIN TO IMPROVE RELIABILITY, FUNCTION, OR DESIGN. FAIRCHILD DOES NOT ASSUME ANY LIABILITY ARISING OUT OF THE APPLICATION OR USE OF ANY PRODUCT OR CIRCUIT DESCRIBED HEREIN; NEITHER DOES IT CONVEY ANY LICENSE UNDER ITS PATENT RIGHTS, NOR THE RIGHTS OF OTHERS. THESE SPECIFICATIONS DO NOT EXPAND THE TERMS OF FAIRCHILD'S WORLDWIDE TERMS AND CONDITIONS, SPECIFICALLY THE WARRANTY THEREIN, WHICH COVERS THESE PRODUCTS.

LIFE SUPPORT POLICY

FAIRCHILD'S PRODUCTS ARE NOT AUTHORIZED FOR USE AS CRITICAL COMPONENTS IN LIFE SUPPORT DEVICES OR SYSTEMS WITHOUT THE EXPRESS WRITTEN APPROVAL OF FAIRCHILD SEMICONDUCTOR CORPORATION.

As used herein:

1. Life support devices or systems are devices or systems which, (a) are intended for surgical implant into the body or (b) support or sustain life, and (c) whose failure to perform when properly used in accordance with instructions for use provided in the labeling, can be reasonably expected to result in a significant injury of the user.
2. A critical component in any component of a life support, device, or system whose failure to perform can be reasonably expected to cause the failure of the life support device or system, or to affect its safety or effectiveness.

ANTI-COUNTERFEITING POLICY

Fairchild Semiconductor Corporation's Anti-Counterfeiting Policy. Fairchild's Anti-Counterfeiting Policy is also stated on our external website, www.fairchildsemi.com, under Sales Support.

Counterfeiting of semiconductor parts is a growing problem in the industry. All manufacturers of semiconductor products are experiencing counterfeiting of their parts. Customers who inadvertently purchase counterfeit parts experience many problems such as loss of brand reputation, substandard performance, failed applications, and increased cost of production and manufacturing delays. Fairchild is taking strong measures to protect ourselves and our customers from the proliferation of counterfeit parts. Fairchild strongly encourages customers to purchase Fairchild parts either directly from Fairchild or from Authorized Fairchild Distributors who are listed by country on our web page cited above. Products customers buy either from Fairchild directly or from Authorized Fairchild Distributors are genuine parts, have full traceability, meet Fairchild's quality standards for handling and storage and provide access to Fairchild's full range of up-to-date technical and product information. Fairchild and our Authorized Distributors will stand behind all warranties and will appropriately address any warranty issues that may arise. Fairchild will not provide any warranty coverage or other assistance for parts bought from Unauthorized Sources. Fairchild is committed to combat this global problem and encourage our customers to do their part in stopping this practice by buying direct or from authorized distributors.

PRODUCT STATUS DEFINITIONS

Definition of Terms

Datasheet Identification	Product Status	Definition
Advance Information	Formative / In Design	Datasheet contains the design specifications for product development. Specifications may change in any manner without notice.
Preliminary	First Production	Datasheet contains preliminary data; supplementary data will be published at a later date. Fairchild Semiconductor reserves the right to make changes at any time without notice to improve design.
No Identification Needed	Full Production	Datasheet contains final specifications. Fairchild Semiconductor reserves the right to make changes at any time without notice to improve the design.
Obsolete	Not In Production	Datasheet contains specifications on a product that is discontinued by Fairchild Semiconductor. The datasheet is for reference information only.

Rev. I61