AKD4118A-B

AK4118A Evaluation Board Rev.0

1. General Description

AKD4118A-B is the evaluation board for AK4118A, 192 kHz digital audio transceiver.
This board has COAX connector to interface with other digital audio equipment.

■ Ordering guide

AKD4118A-B --- Evaluation board for AK4118A
(Control software is included in this package.)

2. Features

□ Digital interface
- **S/PDIF:**
  8 channel input (RX-COAX)
  2 channel output (TX-COAX)
- **Serial audio data I/F:**
  1 input/output (for DIR data output/DIT data input. 10-pin port)

□ Serial control data I/F
1 input/output port (10-pin port)

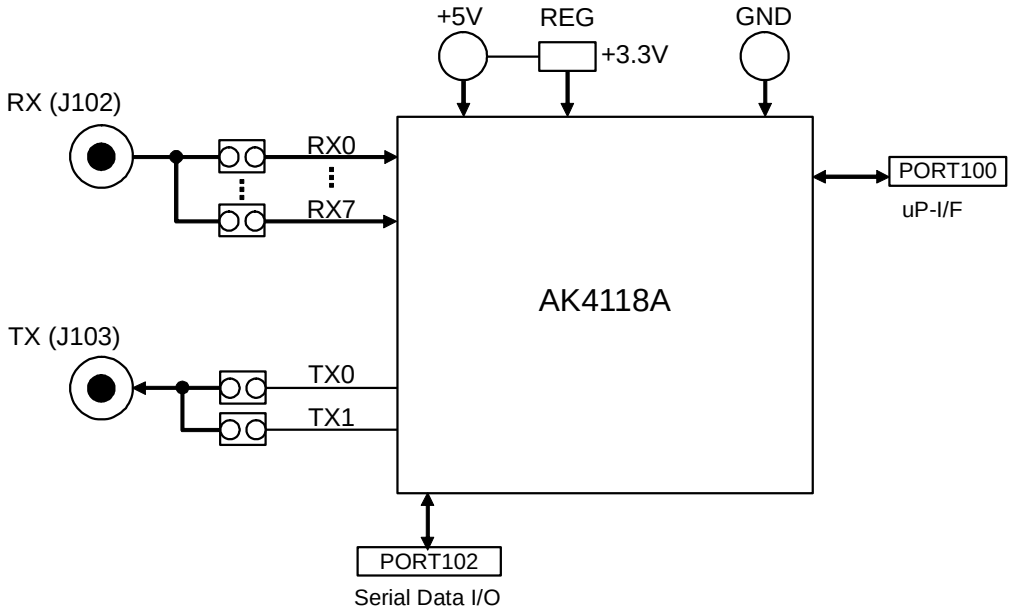

Figure 1. AKD4118A-B Block Diagram

Note 1. Circuit diagram and PCB layout are attached at the end of this manual.

3. Evaluation Board Manual

■ Operating sequence

(1) **Set up the power supply lines.**

Name	Color	Voltage	Breakdown	Details	Default Setting
J101 (+5V)	Red	+5V	VDD of 3.3V Regulator	Must be connected	+5V
J100 (GND)	Black	GND	GND	Must be connected	GND

Note 2. Each supply line should be distributed from the power supply unit.

(2) **Set up the evaluation mode and jumper pins.** (Refer to the following item.)

(3) **Connect cables.** (Refer to the following item.)

(4) **Power on.**
After turning on the power, change SW100 from “L” to “H”.
Note:
When turning on the power, be sure to turn SW100 “L” once to power down (reset) the AK4118A.

■ Evaluation modes

(1) Evaluation for DIR (Default)
J102 (S/PDIF: RX-COAX) – AK4118A – PORT102 (Serial Data I/O)

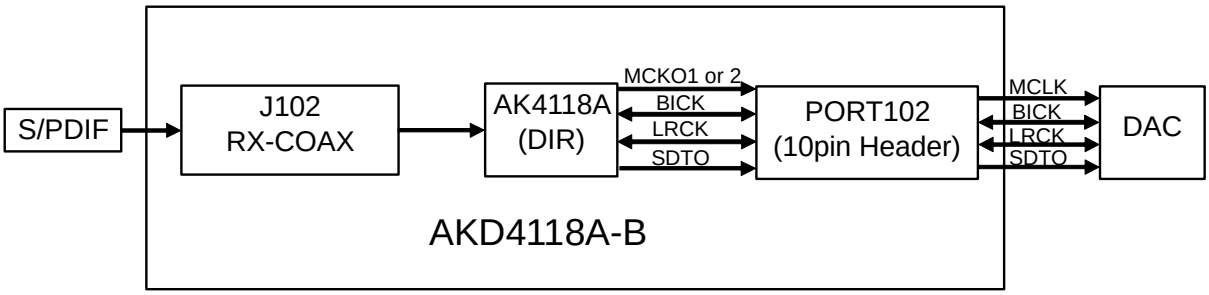

The DIR generates MCLK, BICK, LRCK and SDATA from the received data through RX-COAX connector (J102). The AKD4118A-B can be connected with the AKM’s DAC evaluation board via 10pin flat cable.

a. Set-up of Bi-phase Input

Bi-phase signal input is used from RX-COAX (J102) connector.

a-1. Setting for the RX0-7.

Only RX0-3 can be used in parallel mode. The jumper which selects the Rx channel should be short.
RX0 and RX0-7 should not select at the same time.

Input Data	JP1000	JP100	JP101	JP102	JP103	JP104	JP105	JP106	
RX0	Short	Open	Open	Open	Open	Open	Open	Open	< Default >
RX1	Open	Short	Open	Open	Open	Open	Open	Open	
RX2	Open	Open	Short	Open	Open	Open	Open	Open	
RX3	Open	Open	Open	Short	Open	Open	Open	Open	
RX4	Open	Open	Open	Open	RX4	Open	Open	Open	
RX5	Open	Open	Open	Open	Open	RX5	Open	Open	
RX6	Open	Open	Open	Open	Open	Open	RX6	Open	
RX7	Open	Open	Open	Open	Open	Open	Open	RX7	

Table 1. Set-up of RX0-7

a-2. Set-up of AK4118A input path

It sets up by SW 101_1 and SW 101_5 in parallel mode. Please set up IPS2-0 bits in serial mode.

-	IPS1 pin (SW101_5)	IPS0 pin (SW101_1)	INPUT Data	
IPS2 bit	IPS1 bit	IPS0 bit		
0	0	0	RX0	< Default >
0	0	1	RX1	
0	1	0	RX2	
0	1	1	RX3	
1	0	0	RX4	
1	0	1	RX5	
1	1	0	RX6	
1	1	1	RX7	

(In parallel mode, IPS2 is fixed to “0”)
Table 2. Recovery Data Select

b. Set-up of clock input and output

The signal level outputted/inputted from PORT102 is 3.3V.

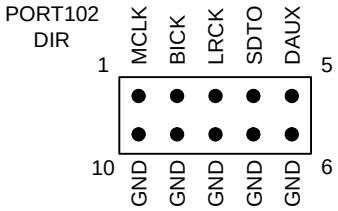

Figure 2. PORT102 pin layout

b-1. MCKO1/MCKO2

The output of MCKO1 pin or MCKO2 pin can be selected by JP113.
The output frequency of MCKO1/MCKO2 is selected by OCKS 1-0.

Output signal	JP113
MCKO1	MCKO1
MCKO2	MCKO2

< Default >

Table 3. Set-up of MCKO1/MCKO2

OCKS1 pin (SW102_1)	OCKS0 pin (SW102_2)	(X'tal)	MCKO1	MCKO2		fs (max)
OCKS1 bit	OCKS0 bit			PLL	X'tal	
0	0	256fs	256fs	"L"	256fs	96 kHz
0	1	256fs	256fs	"L"	128fs	96 kHz
1	0	512fs	512fs	"L"	256fs	48 kHz
1	1	128fs	128fs	"L"	64fs	192 kHz

< Default >

Table 4. Master Clock Frequency Select

b-2. Set-up of input/output of BICK and LRCK

Please select SW 102_7 (DIR_I/O) according to the setup of audio format of AK4118A.

Audio format	SW102_7 (DIR_I/O)
Slave mode	0
Master mode	1

< Default >

Table 5. Set-up of DIR_I/O

c. Set-up of Audio format

It sets up by SW 101_2, SW 101_3 and SW101_4 in parallel mode.
Please set up DIF2-0 bit in serial mode.

Mode	DIF2 pin (SW101_4)	DIF1 pin (SW101_3)	DIF0 pin (SW101_2)	DAUX	SDTO	LRCK		BICK		
	DIF2 bit	DIF1 bit	DIF0 bit				I/O		I/O	
0	0	0	0	24bit, Left justified	16bit, Right justified	H/L	O	64fs	O	
1	0	0	1	24bit, Left justified	18bit, Right justified	H/L	O	64fs	O	
2	0	1	0	24bit, Left justified	20bit, Right justified	H/L	O	64fs	O	
3	0	1	1	24bit, Left justified	24bit, Right justified	H/L	O	64fs	O	
4	1	0	0	24bit, Left justified	24bit, Left justified	H/L	O	64fs	O	< Default >
5	1	0	1	24bit, I^2S	24bit, I^2S	L/H	O	64fs	O	
6	1	1	0	24bit, Left justified	24bit, Left justified	H/L	I	64-128fs	I	
7	1	1	1	24bit, I^2S	24bit, I^2S	L/H	I	64-128fs	I	

Table 6. Audio format

d. Set-up of CM1 and CM0

The operation mode of PLL is selected by CM1 and CM0. In parallel mode, it can be selected by SW102_3 and SW102_4. In serial mode, it can be selected by CM1-0 bits.

CM1 pin (SW102_3) / CM1 bit	CM0 pin (SW102_4) / CM0 bit	(UNLOCK)	PLL	X'tal	Clock source	SDTO source	
0 (CM1=L)	0 (CM0=L)	-	ON	ON (Note 3)	PLL (RX)	RX	
0 (CM1=L)	1 (CM0=H)	-	OFF	ON	X'tal	DAUX	< Default >
1 (CM1=H)	0 (CM0=L)	0	ON	ON	PLL (RX)	RX	
		1	ON	ON	X'tal	DAUX	
1 (CM1=H)	1 (CM0=H)	-	ON	ON	X'tal	DAUX	

ON: Oscillation (Power-up), OFF: STOP (Power-Down)

Note 3. When the X'tal is not used as clock comparison for fs detection (XTL0, 1= "1,1"), the X'tal is OFF.

Table 7. Clock Operation Mode Select

(2) Evaluation for DIT

PORT102 (Serial Data I/O) – AK4118A – J103 (S/PDIF: TX-COAX)

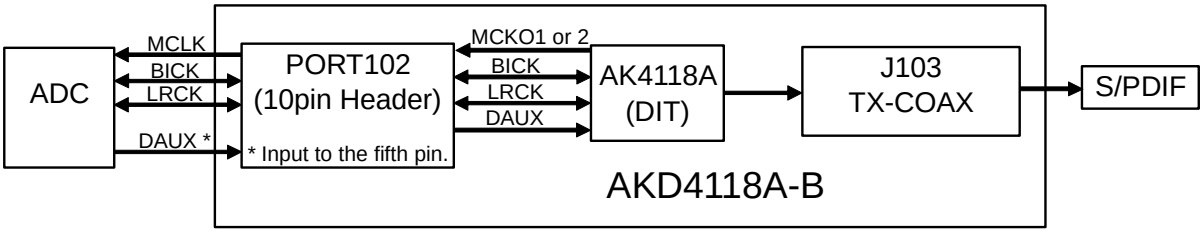

MCLK, BICK, LRCK and DAUX are input the via 10pin header (PORT102: DIR).

a. Set-up of a Bi-phase output signal

Bi-phase signal output is used from TX-COAX (J103) connector.
TX0 and TX1 should not select a TX-COAX connector at the same time.
The data outputted from TX1 can be selected by OPS12-10 bit.
As for TX0, only the loop back mode of RX corresponds.
This mode is fixed to RX0 in parallel mode. In serial mode, it can be selected by OPS02-00 bits.

Output Data	TX-SEL TX0 (JP111_1pin)	TX-SEL TX1 (JP111_3pin)
TX0	TX-COAX	Open
TX1	Open	TX-COAX

< Default >

Table 8. Set-up of Bi-phase signal

b. Set-up of clock input and output

The used signals are MCLK, LRCK, BICK, and DAUX.
The signal level outputted and inputted from PORT102 is 3.3V.

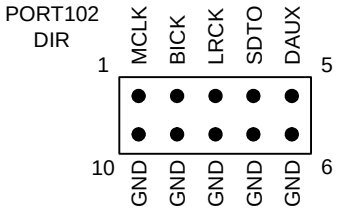

Figure 3. PORT102 pin layout

Clock	PORT	I/O
MCLK	PORT102 1pin	OUT
BICK	PORT102 2pin	IN / OUT
LRCK	PORT102 3pin	IN / OUT
DAUX	PORT102 5pin	IN

Table 9. Clock input/output

b-1. MCKO1/MCKO2

Please refer to Table 3 and Table 4.

b-2. Set-up of input/output of BICK and LRCK

Please refer to Table 5.

c. Set-up of audio data format

Please refer to Table 6.

d. Set-up of CM1 and CM0

Please refer to Table 7.

■ Serial control

The AK4118A can be controlled via the printer port (parallel port) of IBM-AT compatible PC. Connect PORT100 (uP-I/F) with PC by 10-line flat cable packed with the AKD4118A-B. Take care of the direction of connector. There is a mark at pin#1. The pin layout of PORT100 is as Figure 4.

Mode		SW101_6 P/SN	SW101_5 IIC	JP107	JP108	JP109	JP110
Parallel	-	H	-	[OCKS0] is Short.	[OCKS1] is Short.	[CM1] is Short.	[CM0] is Short.
Serial	4 wire Serial	L	L	[CSN] is Short.	[CCLK] is Short.	[CDTI] is Short.	[CDTO] is Short.
Serial	IIC	L	H	[CAD0] is Short.	[SCL] is Short.	[SDA] is Short.	[CAD1] is Short.

Table 10. Set-up of Parallel mode and Serial mode
Note. Default = Serial, 4wire Serial

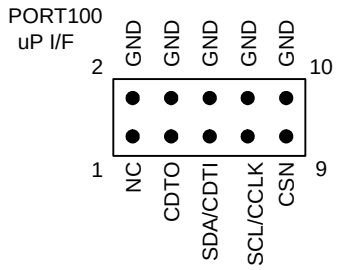

Figure 4. PORT100 pin layout

This evaluation board encloses control software.

■ **Toggle switch set-up**

SW100	PDN	Reset switch for AK4118A. Set to “H” during normal operation. Bring to “L” once after the power is supplied.

■ **LED indication**

LE101	INT0	Bright when INT0 pin goes to “H”.
LE100	INT1	Bright when INT1 pin goes to “H”.

■ **DIP switch (SW101) set-up: -OFF- means “L”**

No.	Switch Name	Function	Default
1	IPS0	Set-up of IPS0 pin. (in parallel mode)	OFF
2	DIF0	Set-up of DIF0 pin. (in parallel mode)	OFF
3	DIF1	Set-up of DIF1 pin. (in parallel mode)	OFF
4	DIF2	Set-up of DIF2 pin. (in parallel mode)	ON
5	IPS1/IIC	Set-up of IPS1 pin. (in parallel mode) Set-up of IIC pin. (in serial mode) “L”: 4 wire Serial, “H”: IIC	OFF
6	P/SN	Set-up of P/SN pin. “L”: Serial mode, “H”: Parallel mode	OFF
7	XTL0	See Table 11Table 11.	OFF
8	XTL1		OFF

■ **DIP switch (SW102) set-up: -OFF- means “L”**

No.	Switch Name	Function	Default
1	OCKS1	Set-up of OCKS1 pin. (in parallel mode)	OFF
2	OCKS0	Set-up of OCKS0 pin. (in parallel mode)	OFF
3	CM1	Set-up of CM1 pin. (in parallel mode)	OFF
4	CM0	Set-up of CM0 pin. (in parallel mode)	ON
5	CAD1	Set-up of CAD1 pin. (in parallel mode)	OFF
6	CAD0	Set-up of CAD0 pin. (in parallel mode)	OFF
7	DIR_I/O	Setting the transmission direction of BICK and LRCK of the PORT102. “L”: When inputting from PORT102 “H”: When outputting from PORT102	ON
8	NC	Don’t care	OFF

■ **Set-up of XTL1 and XTL0**

SW101_8	SW101_7	X’tal Frequency	
XTL1	XTL0		
0	0	11.2896MHz	< Default >
0	1	12.288MHz	
1	0	24.576MHz	
1	1	(Use channel status)	

Table 11. Set-up of XTL1 and XTL0

■ **Jumper set up.**

No.	Jumper Name	Function
JP1000	RX0	Set-up of RX0 input circuit. Only for the Rx input you want to use, set the jumper pin to "short". < Default >
JP100 JP101 JP102	RX1 RX2 RX3	Set-up of RX1-3 input circuit. Only for the Rx input you want to use, set the jumper pin to "short".
JP103 JP104 JP105 JP106	RX4 RX5 RX6 RX7	RX4-7 set-up depending serial/parallel mode RX4-7: Serial mode < Default > Only for the Rx input you want to use, set the jumper pin to "short". IPS0,DIF0,DIF1,DIF2: Parallel mode
JP107	CSN CAD0 OCKS0	Control Signal set-up depending serial/parallel mode See Table 10.
JP108	SCL/CCLK OCKS1	Control Signal set-up depending serial/parallel mode See Table 10.
J109	SDA/CDTI CM1	Control Signal set-up depending serial/parallel mode See Table 10.
JP110	CDTO CAD1 CM0	Control Signal set-up depending serial/parallel mode See Table 10.
JP111	TX0 TX1	Set-up of TX0 output circuit. TX0: When using TX0 output, Set to “TX0”. TX1: When using TX1 output, Set to “TX1”. < Default >
JP112	MCKO1 MCKO2	Don’t care
JP113	MCKO1 MCKO2	MCKO set-up for PORT102 (DIR). MCKO1: MCKO1 of AK4118A < Default > MCKO2: MCKO2 of AK4118A

Control Software Manual

■ Set-up of evaluation board and control software

1. Set up the AKD4118A-B according to previous term.

2. Connect IBM-AT compatible PC with the evaluation board (AKD4118A-B) by 10-line type flat cable (packed with AKD4118A-B). Take care of the direction of 10pin header.

   [Supported OS]
   Windows 7 (32bit) / Windows 10 (64bit) / Windows11 (64bit)

3. Insert the CD-ROM labeled “AKD4118A-B Evaluation Kit” into the CD-ROM drive.

4. Access the CD-ROM drive and double-click the icon of “ak4118a.exe” to set up the control program.

5. Then please evaluate according to the follows.

■ Operation flow

Keep the following flow.

1. Set up the control program according to explanation above.
2. Click “Write default” button.
3. Then set up the dialog and input data.

■ Control Software image

The following operation screen will be shown. (Default setting)

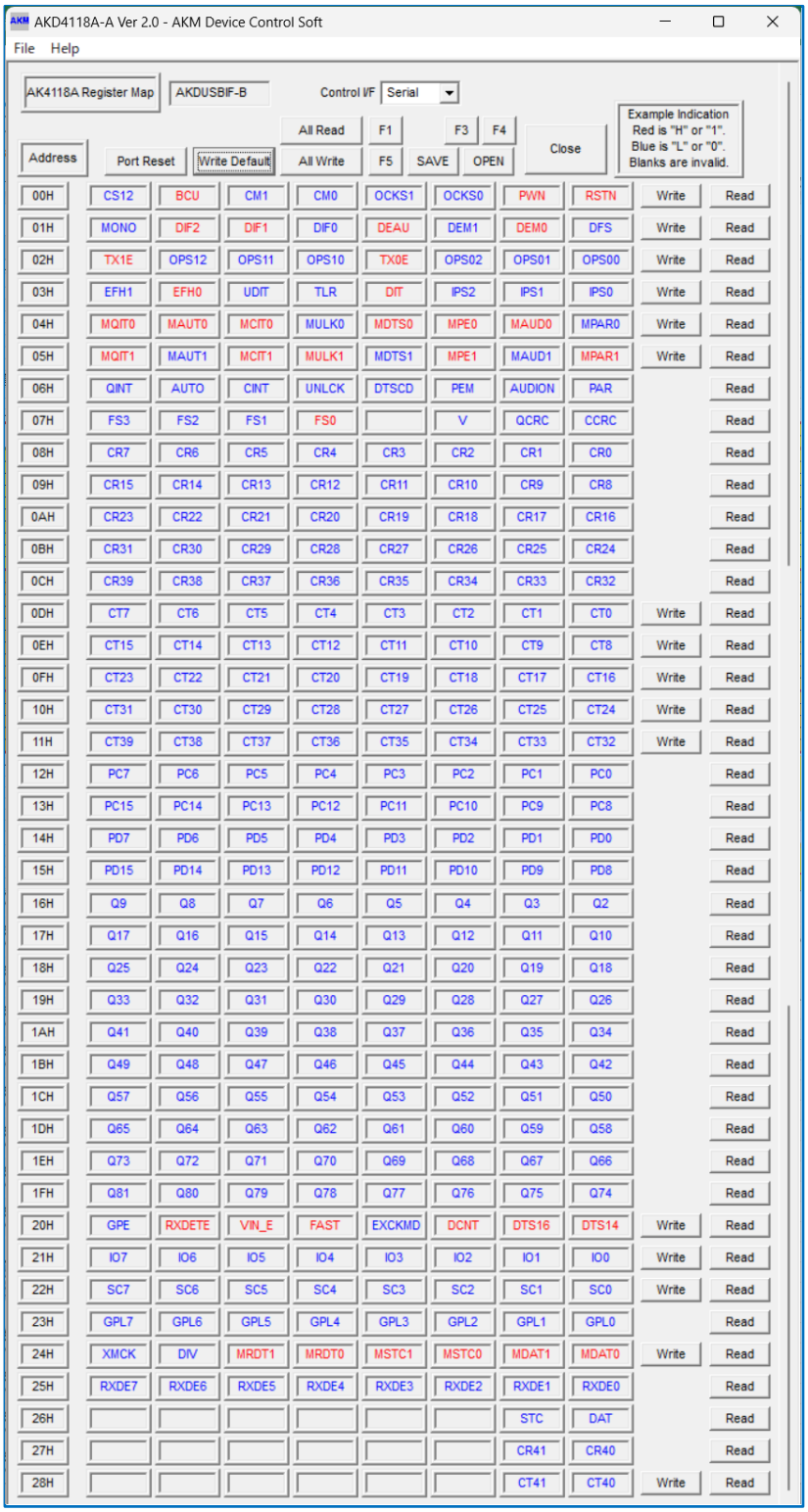

Figure5. Control software window

■ Explanation of each buttons

1. [Port Setup] : Set up the printer port.
2. [Write default] : Initialize the register of AK4118A.
3. [All Write] : Write all registers that is currently displayed.
4. [Read All] : All the registers of AK4118A are read.
5. [Function1] : Dialog to write data by keyboard operation.
6. [F3] : Dialog of sequential writing.
7. [SAVE] : Save the current register setting.
8. [OPEN] : Write the saved values to all register.
9. [Write] : Dialog to write data by mouse operation.
10. [Read] : The data corresponding to each register is read.

■ Explanation of each dialog

1. [Function1 Dialog] : Dialog to write data by keyboard operation

   Address Box: Input register address in 2 figures of hexadecimal.
   Data Box: Input register data in 2 figures of hexadecimal.

   If you want to write the input data to AK4118A, click “OK” button. If not, click “Cancel” button.

2. [Write Dialog] : Dialog to write data by mouse operation

   There are dialogs corresponding to each register.

   Click the “Write” button corresponding to each register to set up the dialog. If you check the check box, data becomes “H” or “1”. If not, “L” or “0”.

   If you want to write the input data to AK4118A, click “OK” button. If not, click “Cancel” button.

■ Indication of data

Input data is indicated on the register map. Red letter indicates “H” or “1” and blue one indicates “L” or “0”. Blank is the part that is not defined in the datasheet.

■ Attention on the operation

If you set up Function1 dialog, input data to all boxes. Attention dialog is indicated if you input data or address that is not specified in the datasheet or you click “OK” button before you input data. In that case set up the dialog and input data once more again. These operations does not need if you click “Cancel” button or check the check box.

4. Revision History

Date (Y/M/D)	Revision	Reason	Page	Contents
24/11/08	KM138800	First Edition	-	-

IMPORTANT NOTICE

0. Asahi Kasei Microdevices Corporation (“AKM”) reserves the right to make changes to the information contained in this document without notice. When you consider any use or application of AKM product stipulated in this document (“Product”), please make inquiries the sales office of AKM or authorized distributors as to current status of the Products.
1. All information included in this document are provided only to illustrate the operation and application examples of AKM Products. AKM neither makes warranties or representations with respect to the accuracy or completeness of the information contained in this document nor grants any license to any intellectual property rights or any other rights of AKM or any third party with respect to the information in this document. You are fully responsible for use of such information contained in this document in your product design or applications. AKM ASSUMES NO LIABILITY FOR ANY LOSSES INCURRED BY YOU OR THIRD PARTIES ARISING FROM THE USE OF SUCH INFORMATION IN YOUR PRODUCT DESIGN OR APPLICATIONS.
2. The Product is neither intended nor warranted for use in equipment or systems that require extraordinarily high levels of quality and/or reliability and/or a malfunction or failure of which may cause loss of human life, bodily injury, serious property damage or serious public impact, including but not limited to, equipment used in nuclear facilities, equipment used in the aerospace industry, medical equipment, equipment used for automobiles, trains, ships and other transportation, traffic signaling equipment, equipment used to control combustions or explosions, safety devices, elevators and escalators, devices related to electric power, and equipment used in finance-related fields. Do not use Product for the above use unless specifically agreed by AKM in writing.
3. Though AKM works continually to improve the Product’s quality and reliability, you are responsible for complying with safety standards and for providing adequate designs and safeguards for your hardware, software and systems which minimize risk and avoid situations in which a malfunction or failure of the Product could cause loss of human life, bodily injury or damage to property, including data loss or corruption.
4. Do not use or otherwise make available the Product or related technology or any information contained in this document for any military purposes, including without limitation, for the design, development, use, stockpiling or manufacturing of nuclear, chemical, or biological weapons or missile technology products (mass destruction weapons). When exporting the Products or related technology or any information contained in this document, you should comply with the applicable export control laws and regulations and follow the procedures required by such laws and regulations. The Products and related technology may not be used for or incorporated into any products or systems whose manufacture, use, or sale is prohibited under any applicable domestic or foreign laws or regulations.
5. Please contact AKM sales representative for details as to environmental matters such as the RoHS compatibility of the Product. Please use the Product in compliance with all applicable laws and regulations that regulate the inclusion or use of controlled substances, including without limitation, the EU RoHS Directive. AKM assumes no liability for damages or losses occurring as a result of noncompliance with applicable laws and regulations.
6. Resale of the Product with provisions different from the statement and/or technical features set forth in this document shall immediately void any warranty granted by AKM for the Product and shall not create or extend in any manner whatsoever, any liability of AKM.
7. This document may not be reproduced or duplicated, in any form, in whole or in part, without prior written consent of AKM.

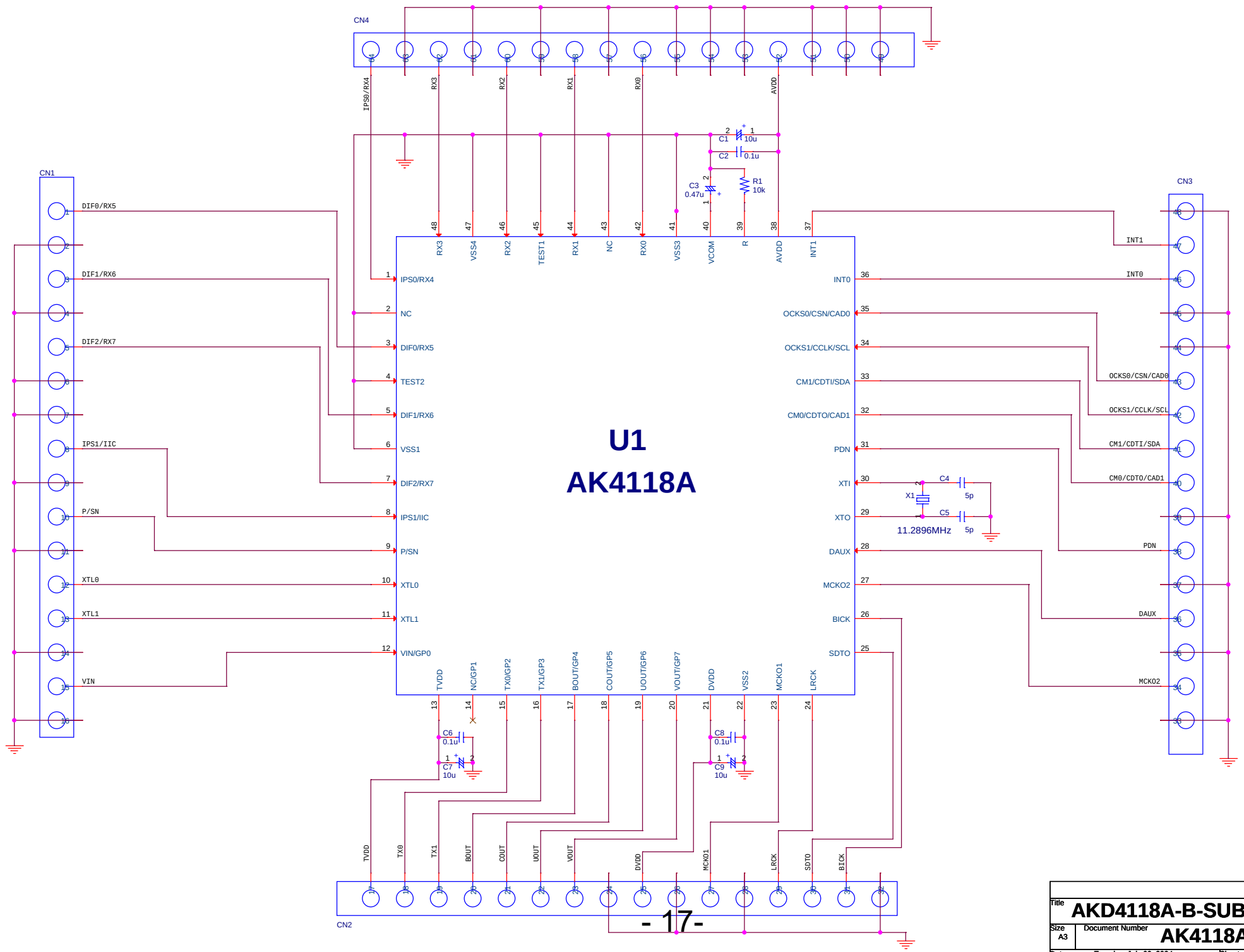

Title	AKD4118A-B-SUB-48LQFP	
Size A3	Document Number AK4118A	Rev 0
Date: Tuesday, July 09, 2024	Sheet 1 of 1	

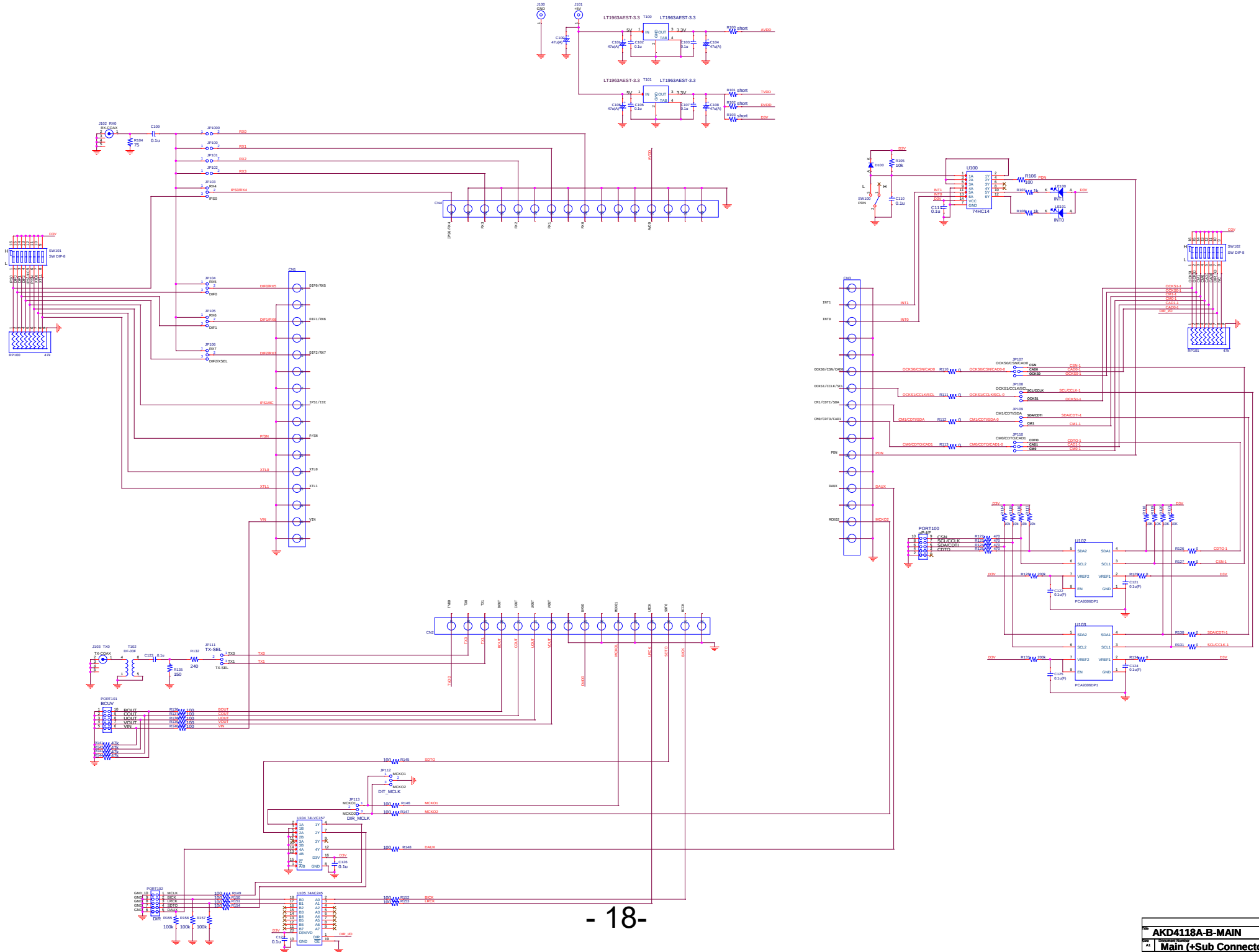

File	AKD4118A-B-MAIN		
Size A1	Document Number Main (+Sub Connector)		Rev 0
Date: Wednesday, September 04, 2024	Sheet 1 of 1		

AKD4118A-B Rev.0 Sub Board
Silk diagram (Parts Side(Layer1))

Parts side perspective view

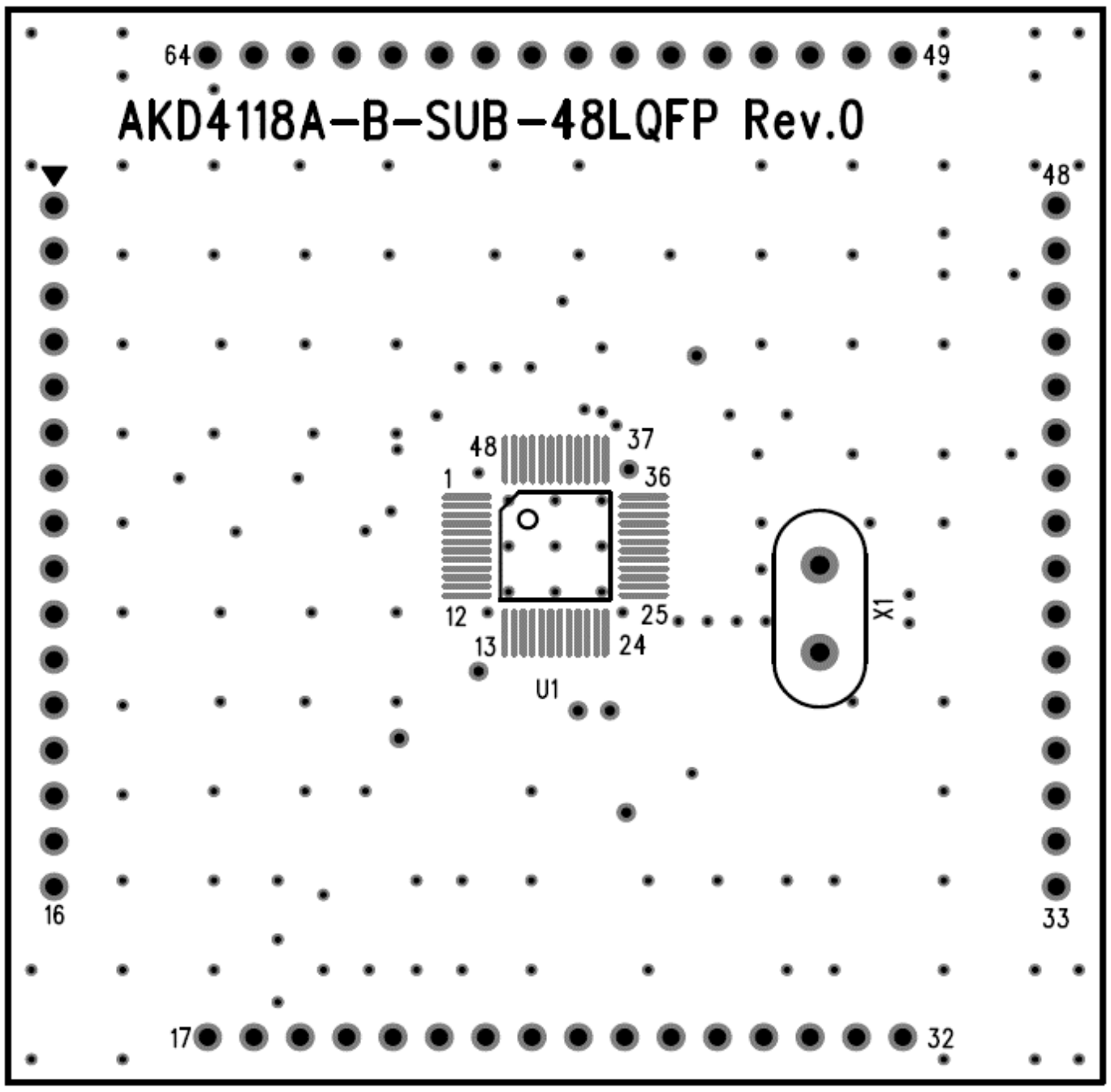

Silk diagram (Solder Side(Layer2))

Parts side perspective view

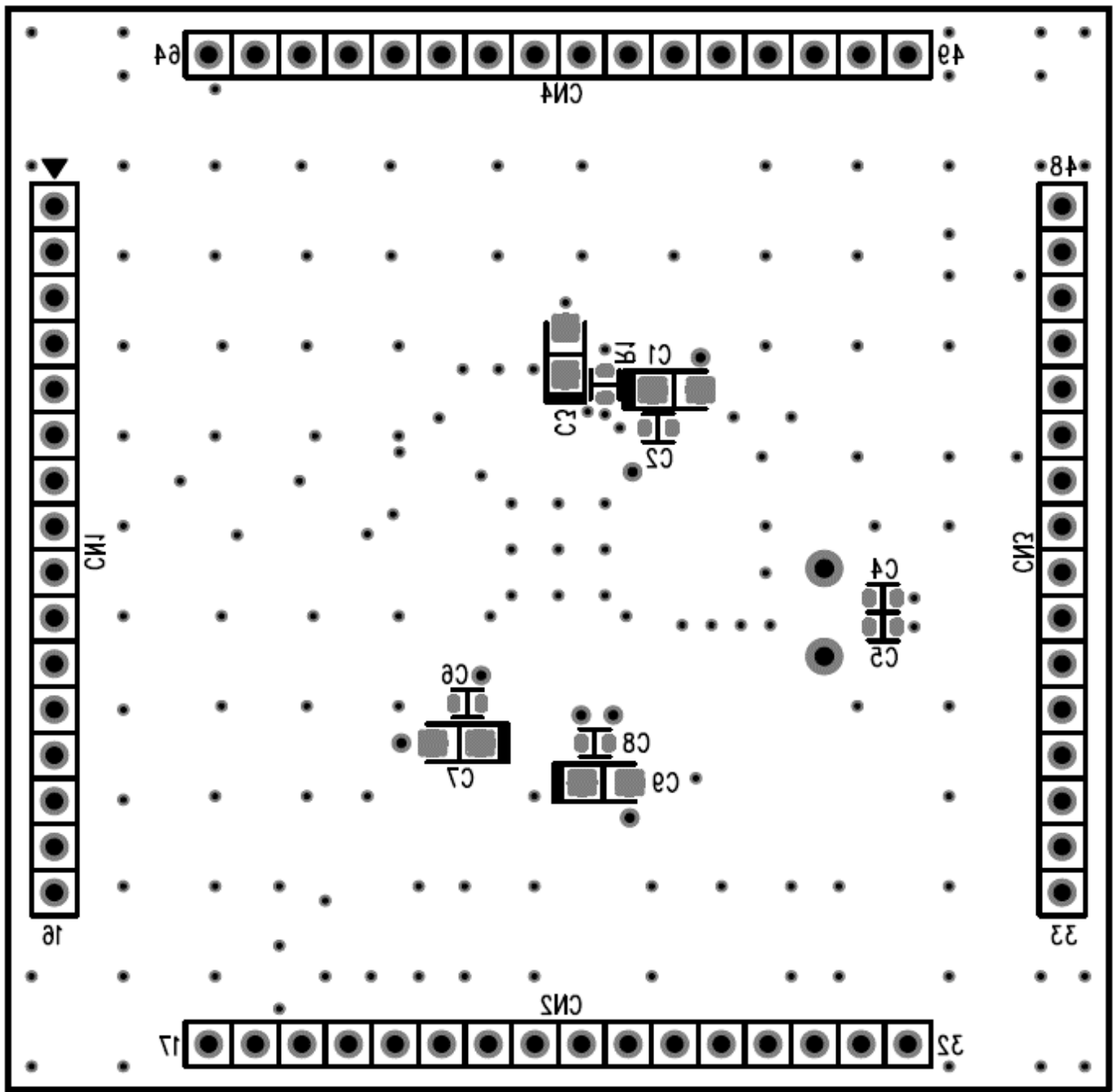

Pattern diagram(Parts Side(Layer1))

Parts side perspective view

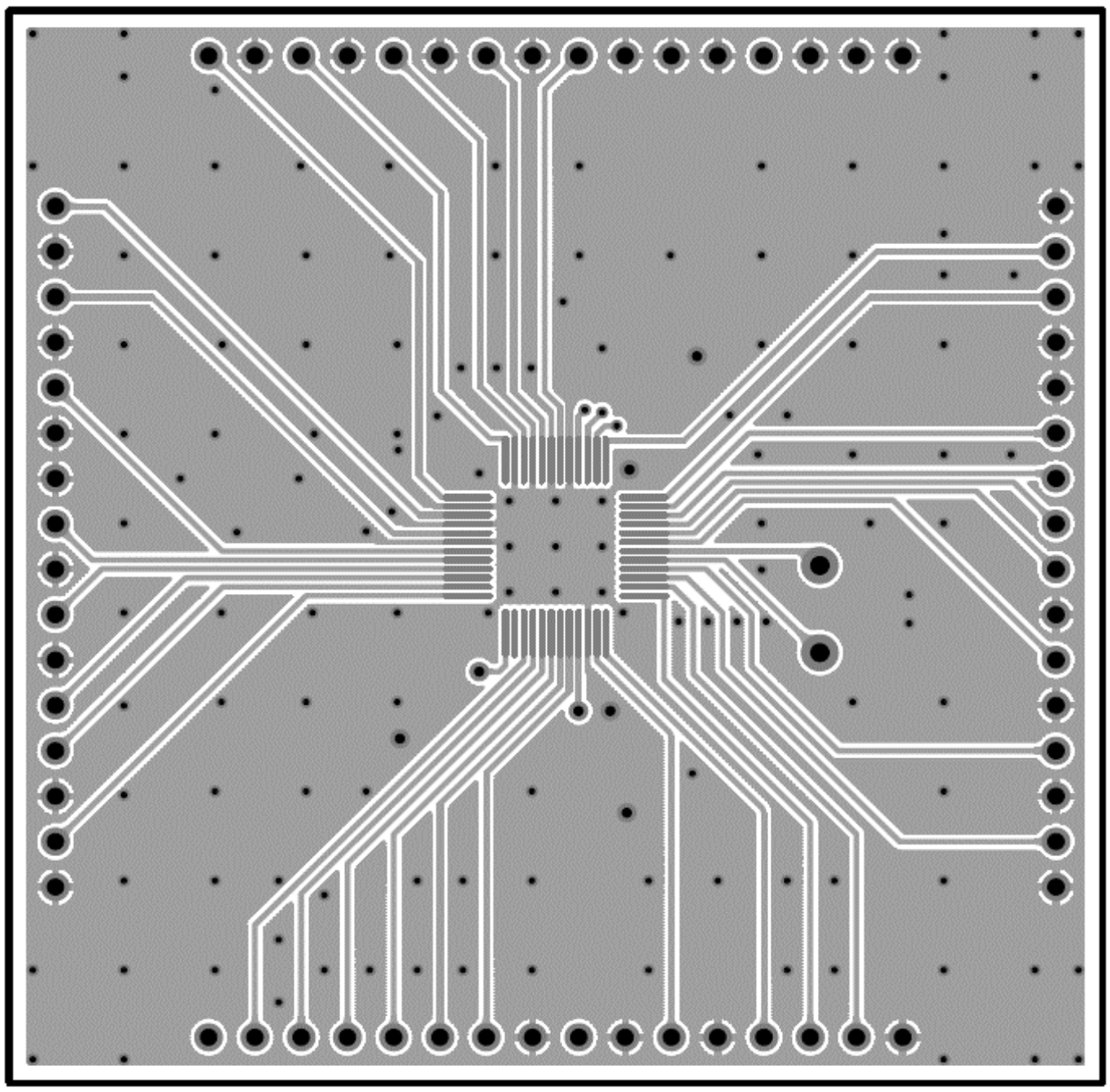

Pattern diagram(Solder Side(Layer4))

Parts side perspective view

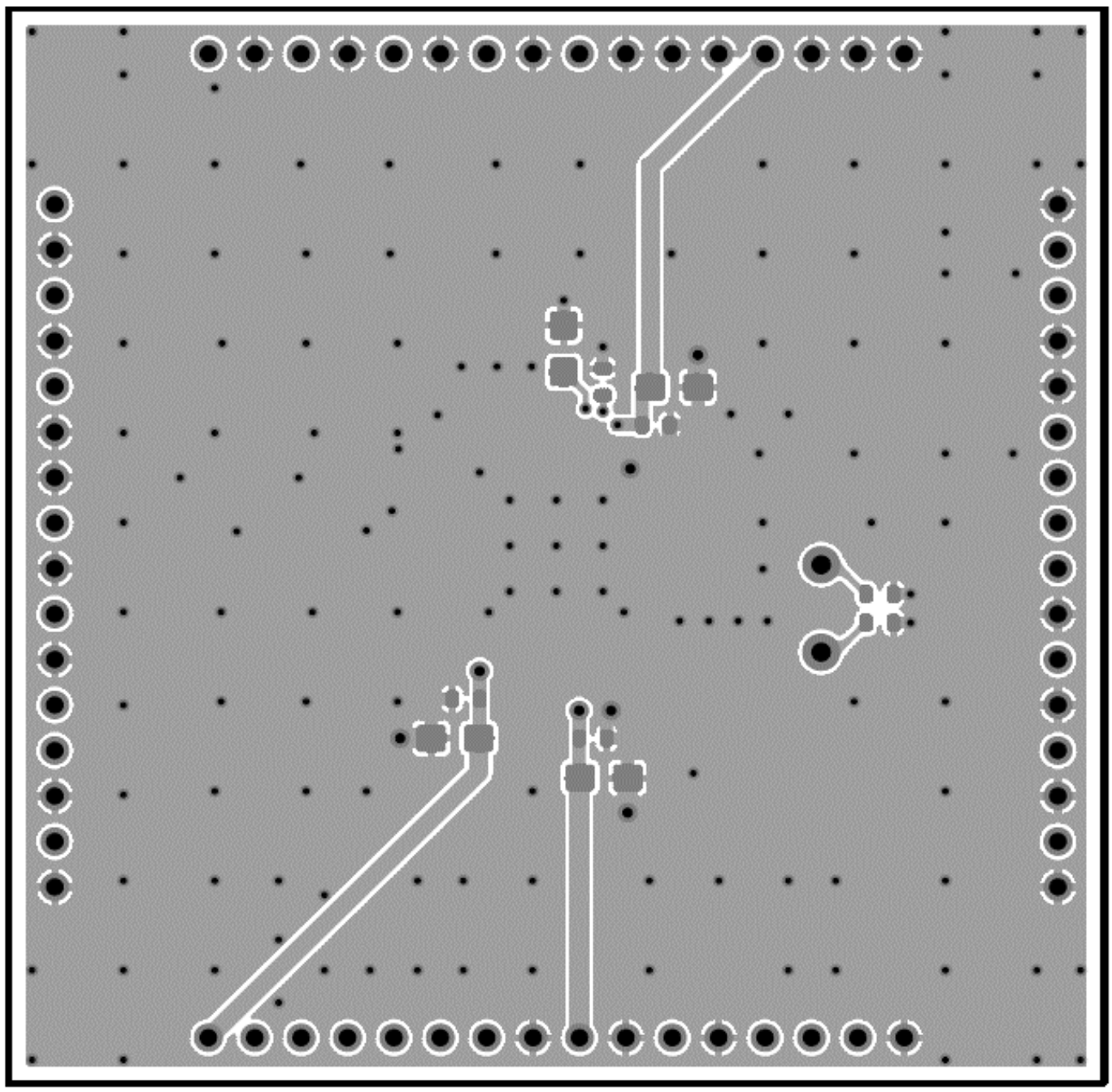

External drawing, Dimensional drawing

Parts side perspective view

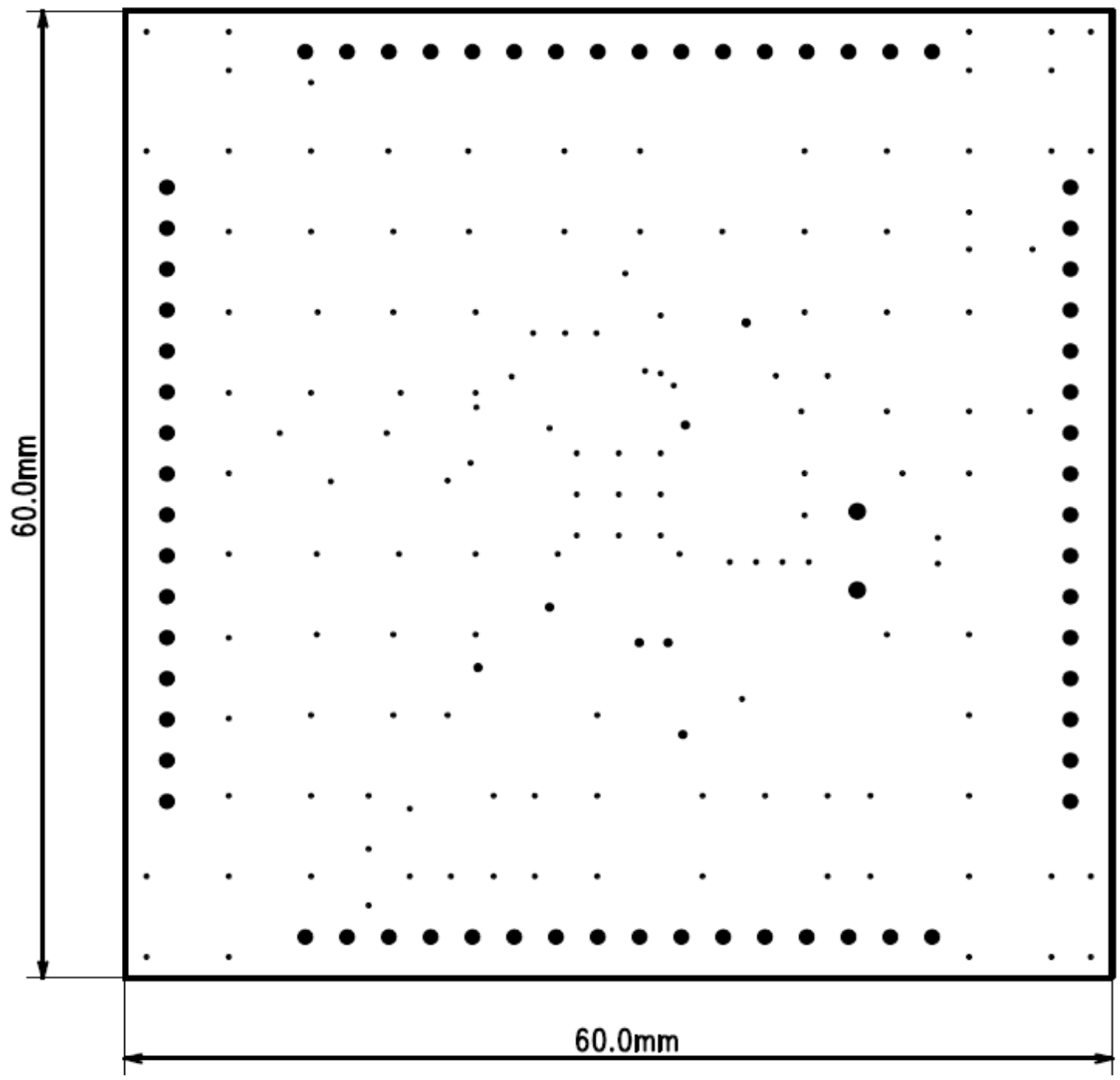

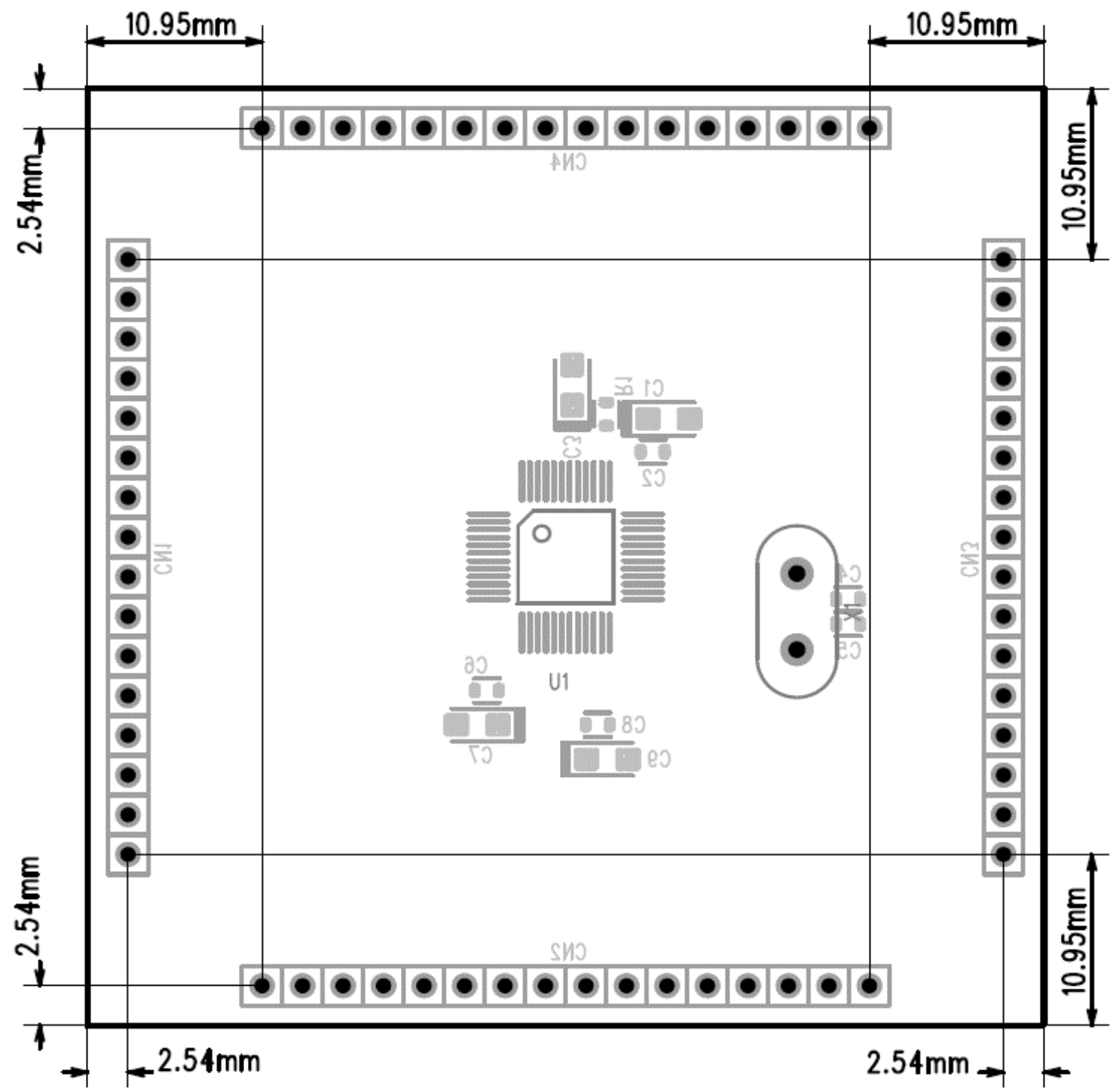

AKD4118A-B Rev.0 Main Board
Silk diagram (Parts Side(Layer1))

Parts side perspective view

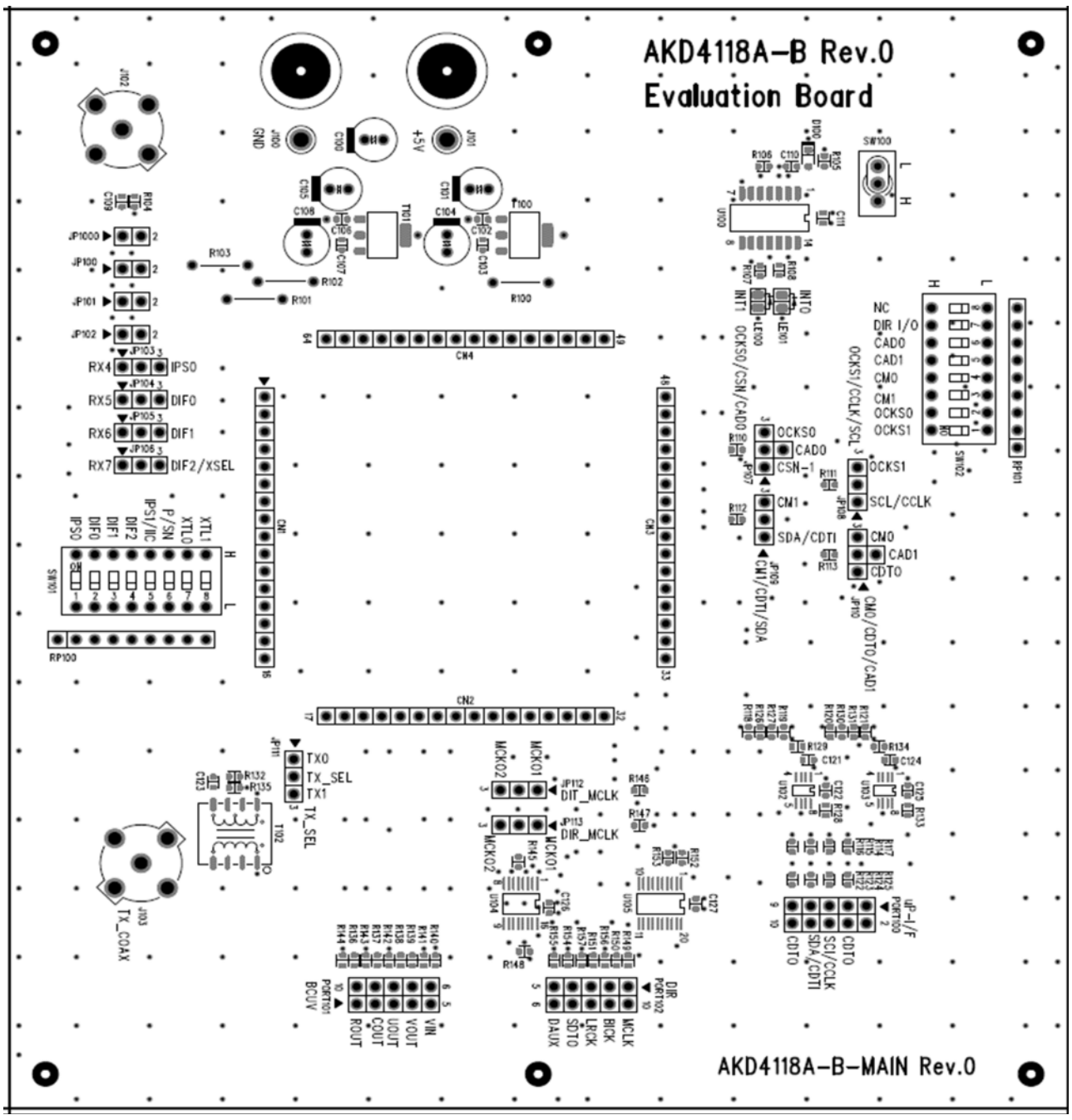

Silk diagram (Solder Side(Layer2))

Parts side perspective view

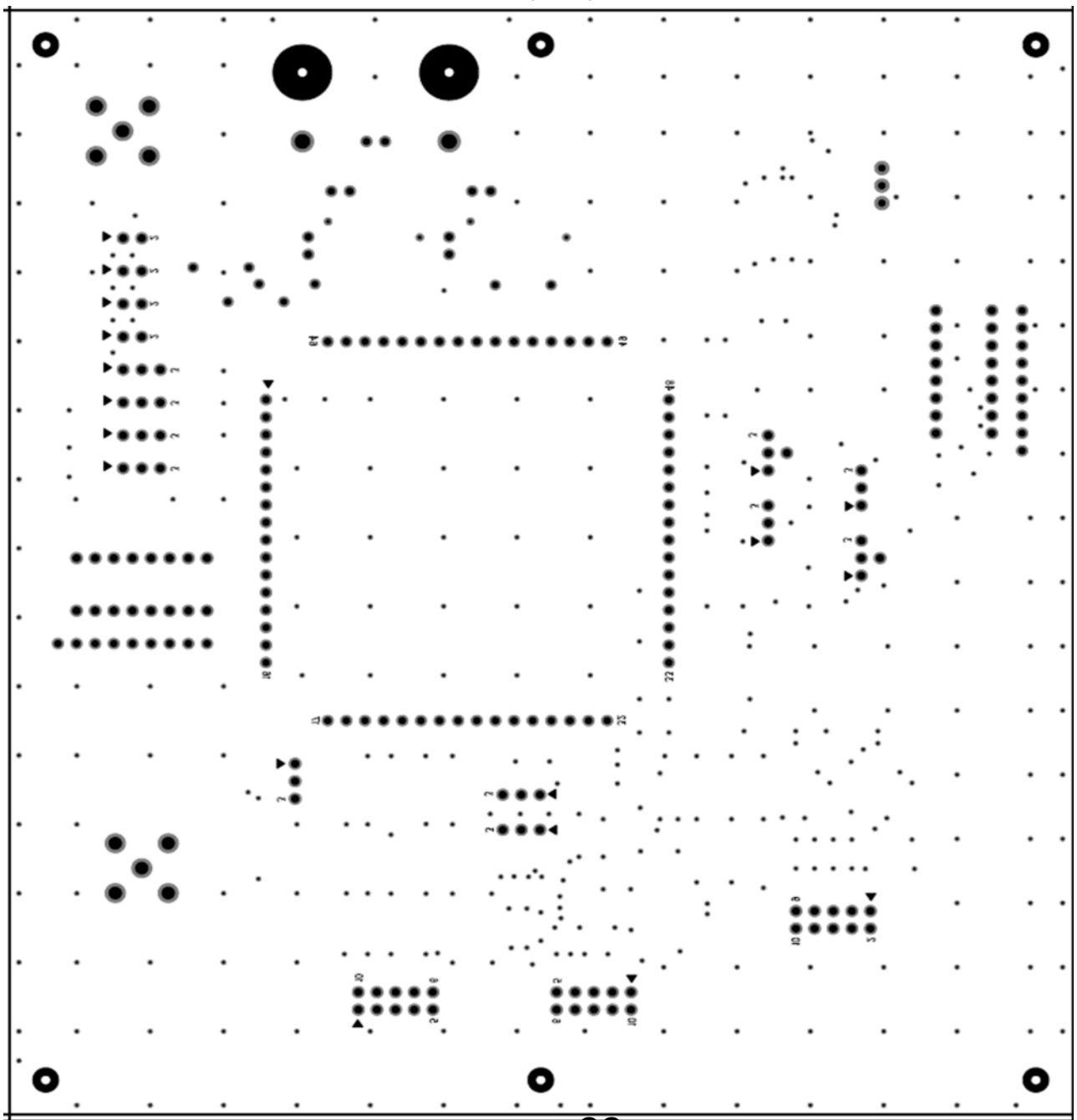

Pattern diagram(Parts Side(Layer1))

Parts side perspective view

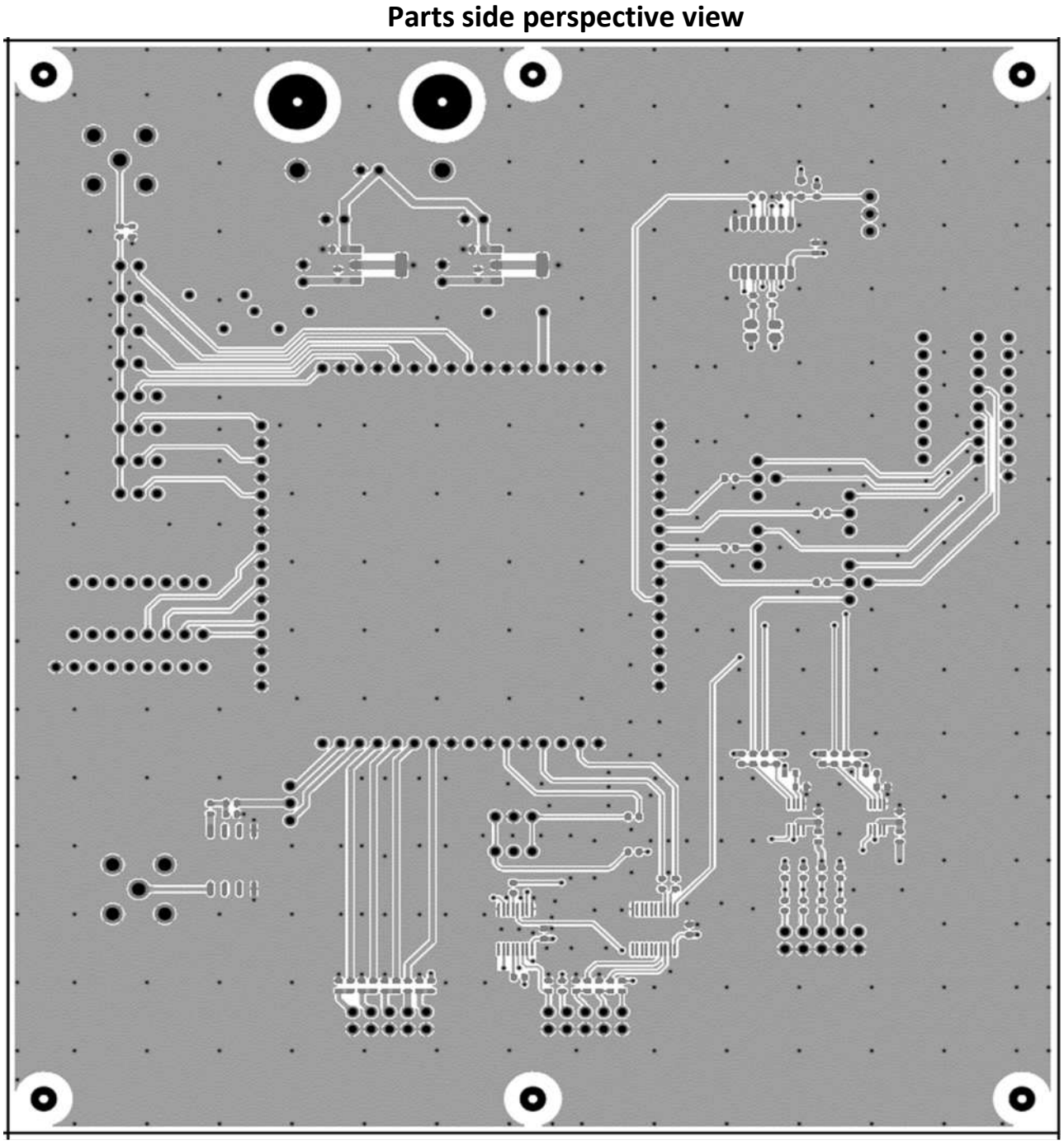

Pattern diagram(Solder Side(Layer4))

Parts side perspective view

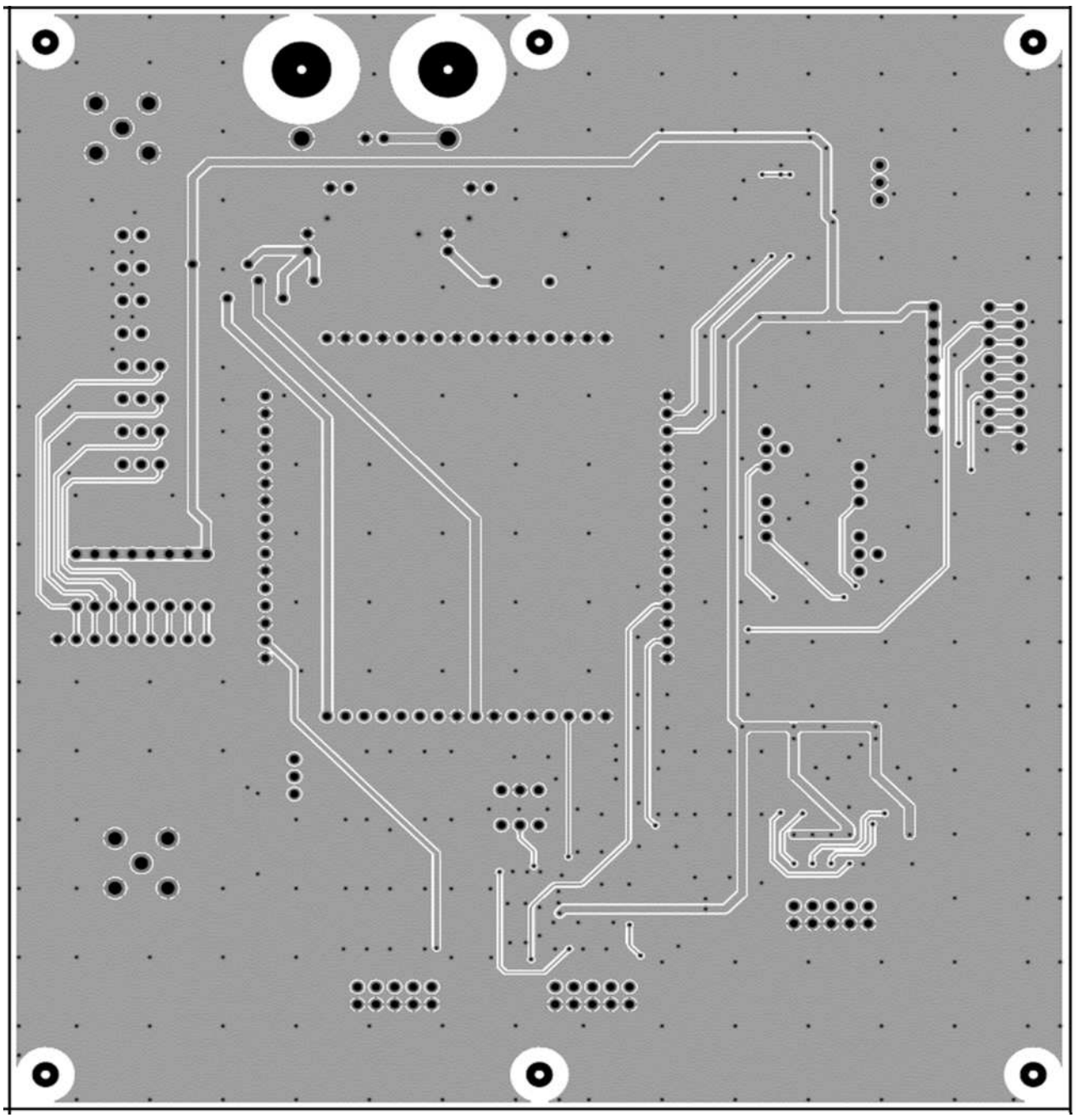

External drawing, Dimensional drawing
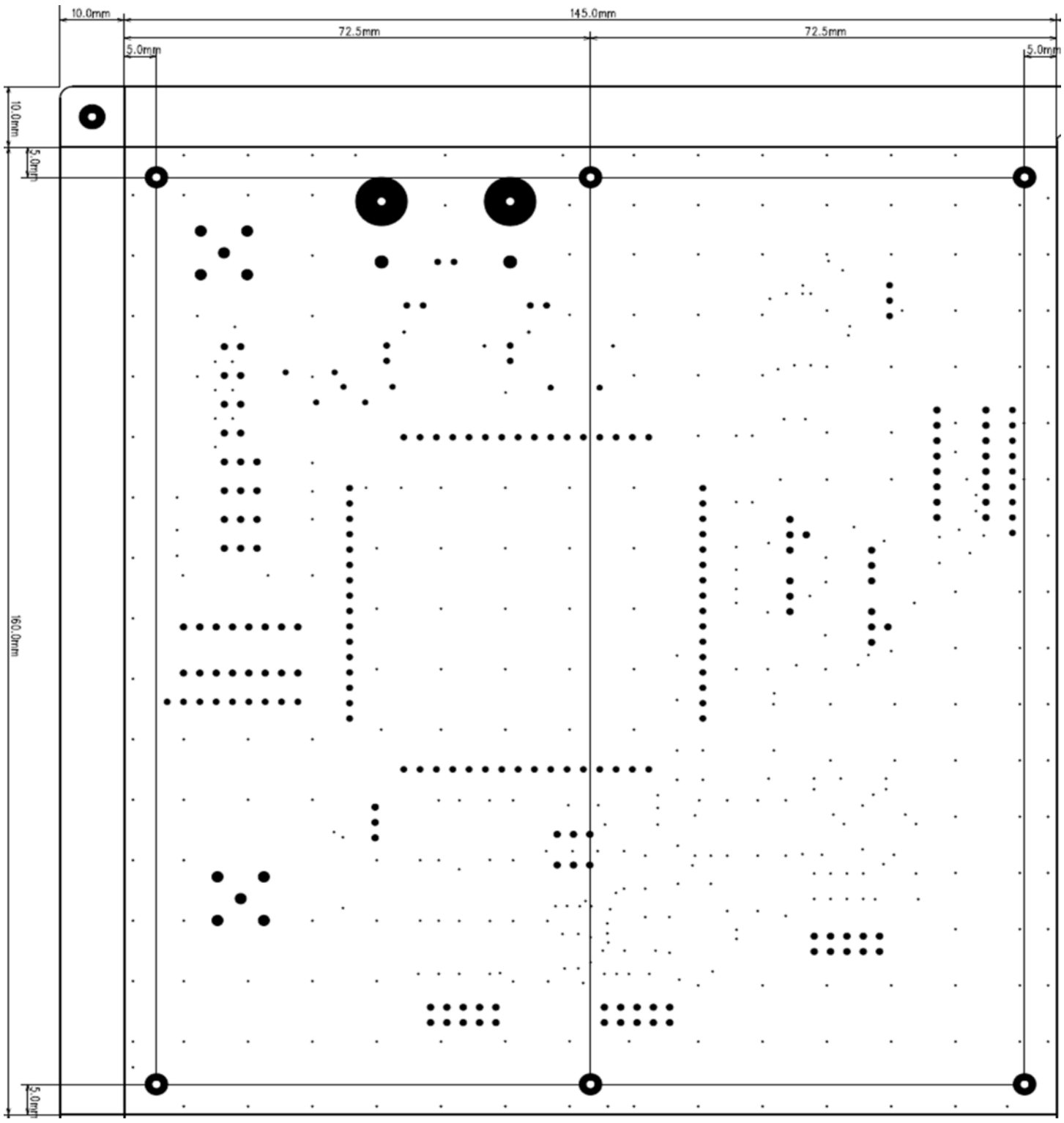
Parts side perspective view