Mode	JP1	JP2	JP3	JP4	U2
C64 shortboard					x
1541C/1541II 16K	x	x		x	

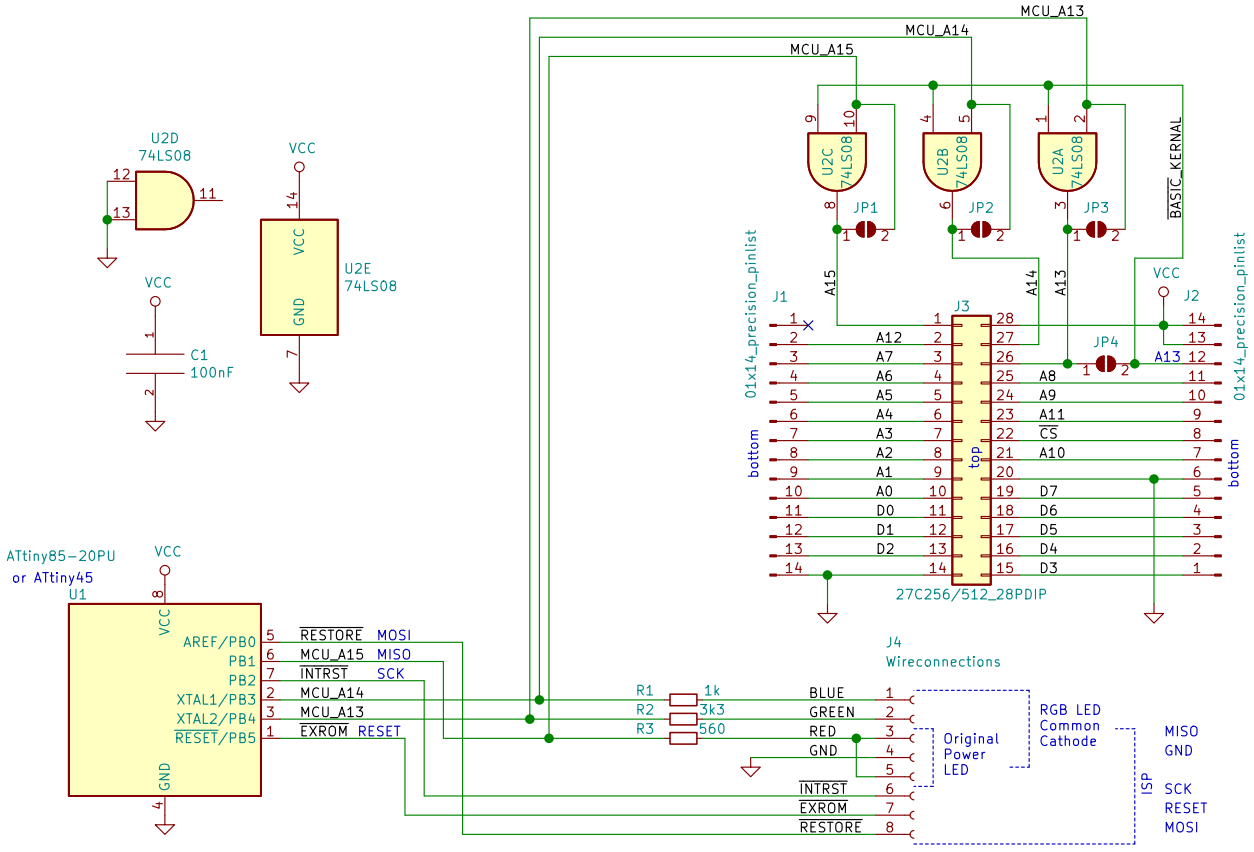

1541C/1541-II mode: Do not add U2. Add solder to JP1, JP2 and JP4. Use *256 ROM.
C64 shortboard: Add U2, and include BASIC image at bank0 in a *256 or *512 ROM.
Ideas from Sven Petersen's switcher.
C64 Short motherboard version. 28-28pin board.

Bwack

Sheet: /
File: C64-Switchless-Quad-Kernal-Switcher.sch

Title: C64 Switchless Quad Kernal Switcher - shortboard

Size: A4	Date: 2021-08-10	**Rev: 1.1**
KiCad E.D.A. kicad 5.1.5+dfsg1-2build2		Id: 1/1