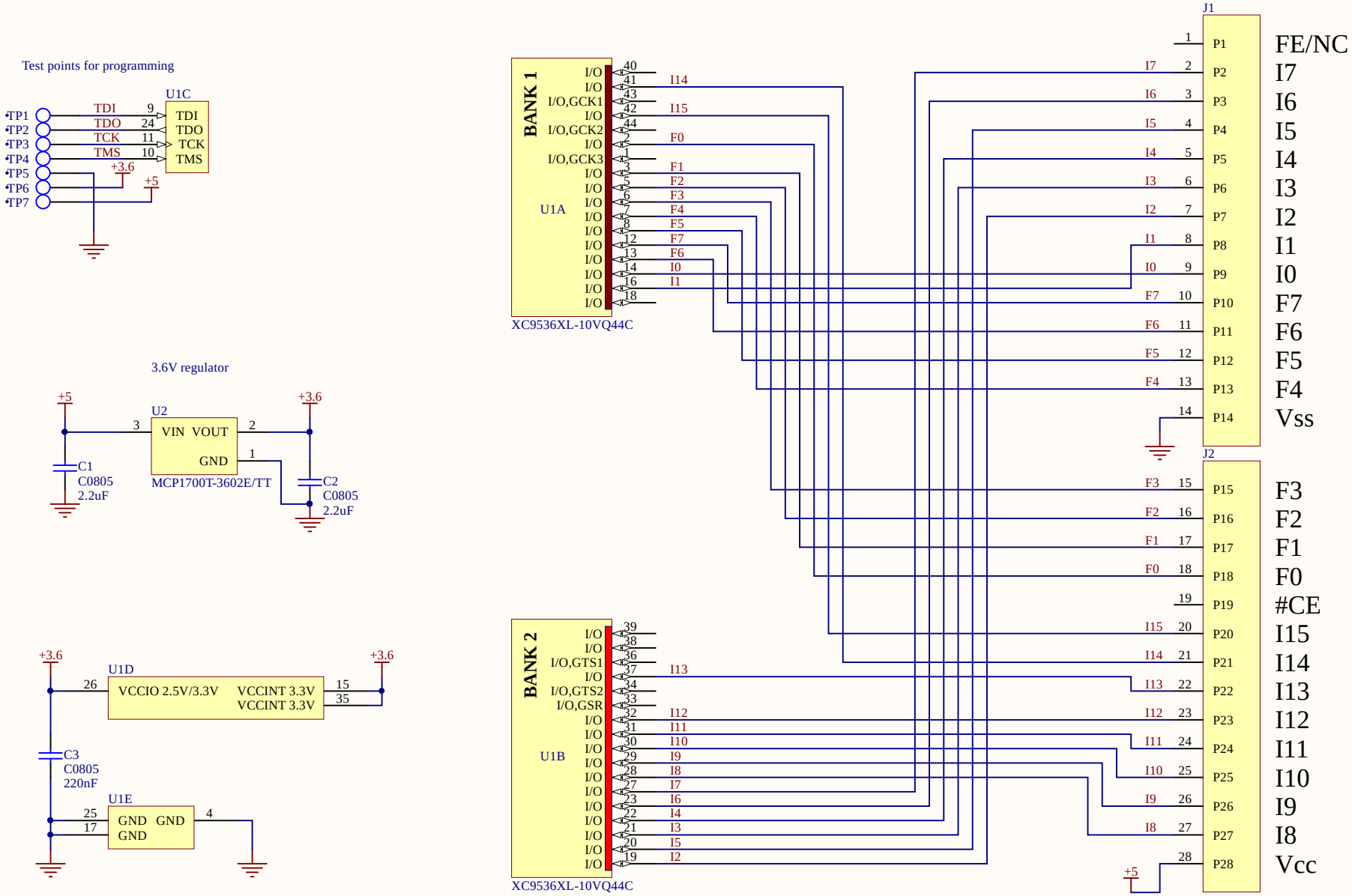

MOS LOGO

Title neatPLA		
Size A4	Number	Revision 1.0
Date: 26/04/2020		Sheet of 1/1
File: G:\Nextcloud\..\neatPLA.SchDoc		Drawn By: Pasi Lassila