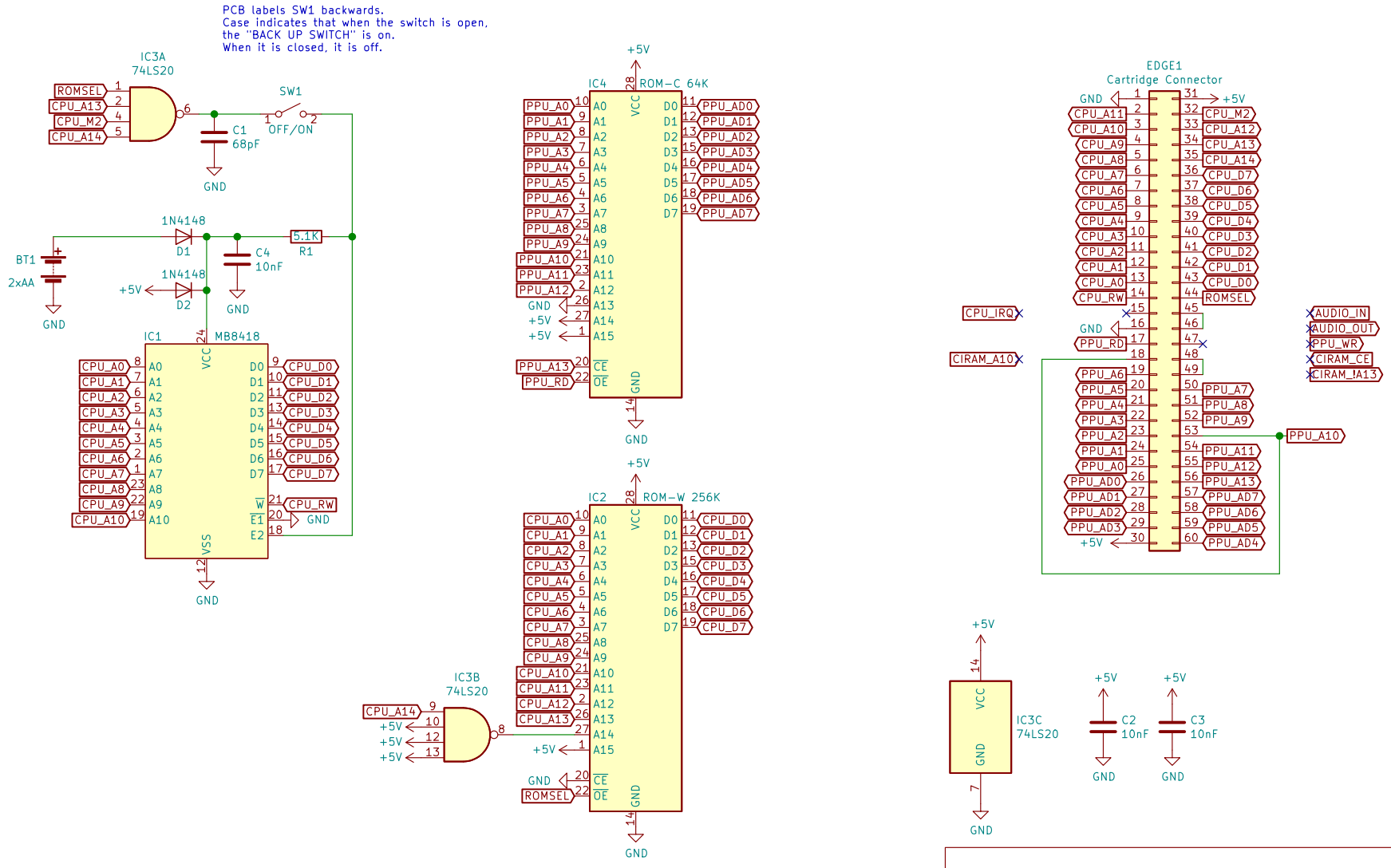


SCHENKTRONICS

**N. Schenk**

Sheet: /

File: HVC-FamilyBasic.sch

***Title: HVC-FamilyBasic Schematic***

| | | |
|---|---|---|
| Size: A4 | Date: 2020-06-06 | **Rev:** |
| KiCad E.D.A. kicad (5.1.5)-3 | | Id: 1/1 |