IMF EBG-BHD-76800.1/0

CAPACITY: .72 YD³ / .55 M³

EBG-BRB-76800 | R- 0

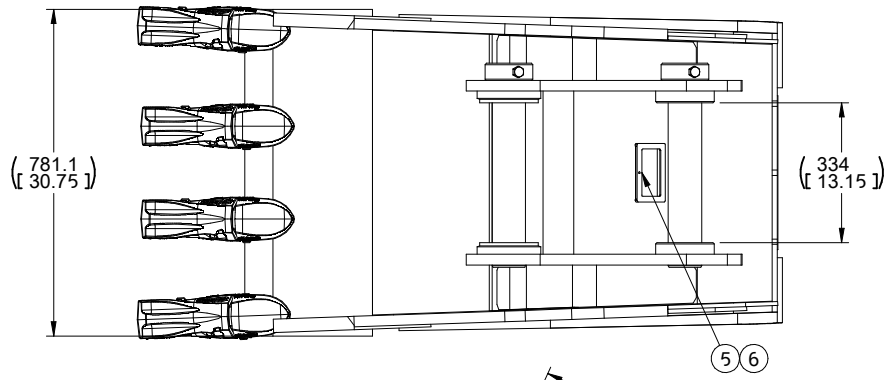

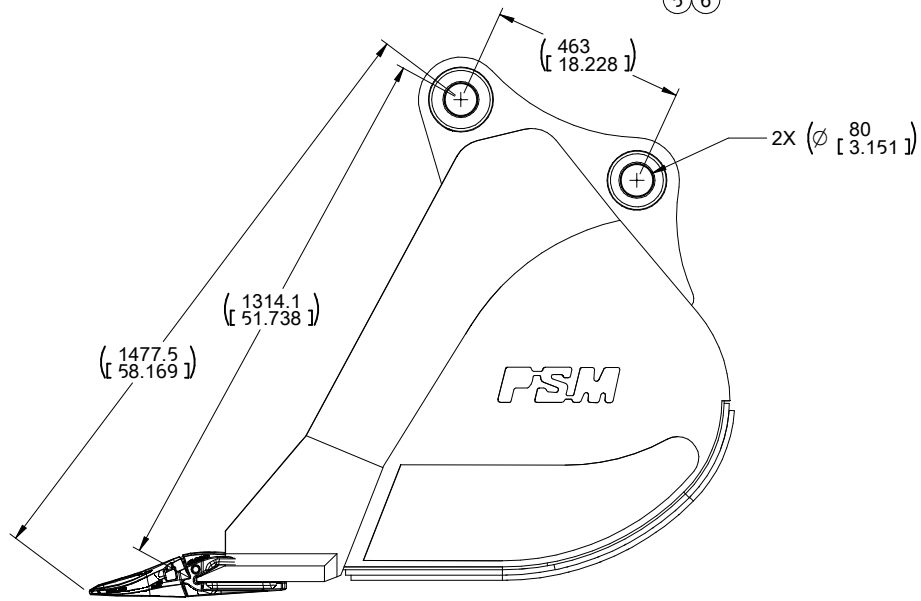

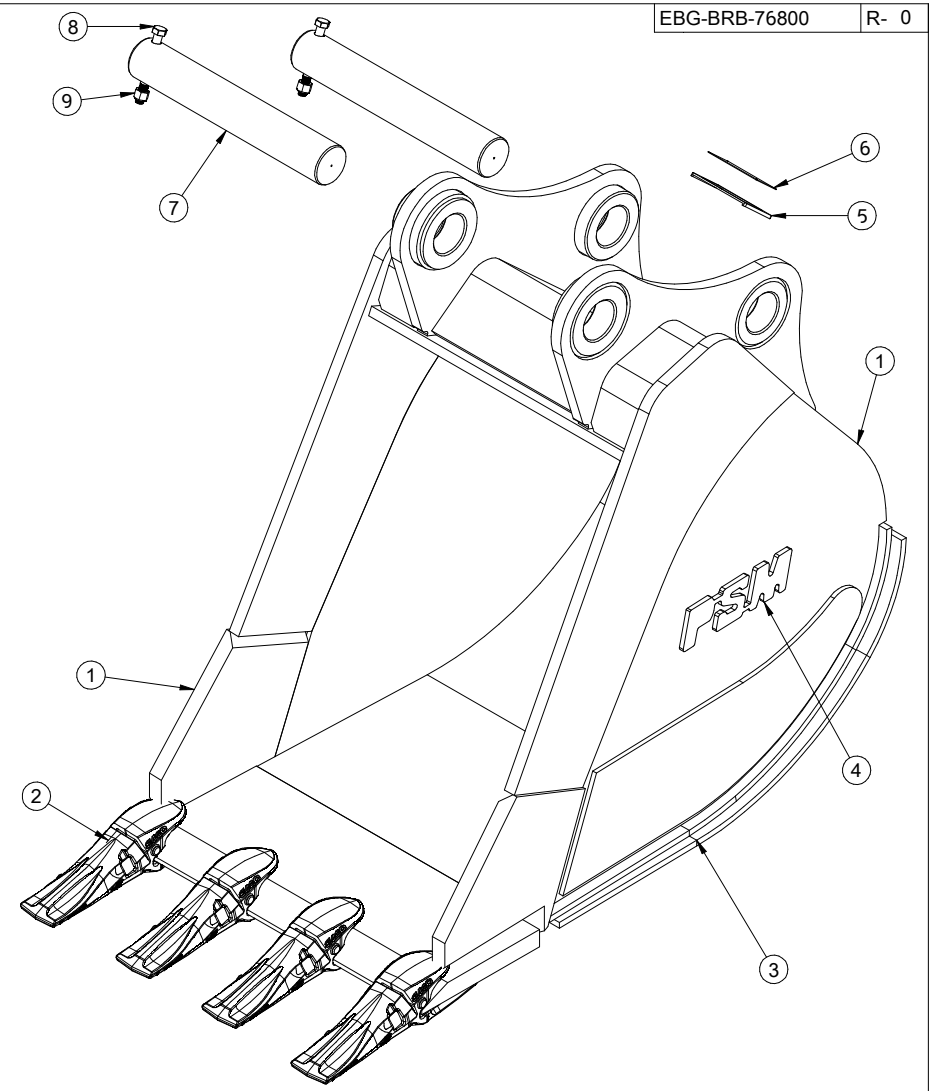

o	o-o	PN	-----
1	1	2253190	BKT ASSY
2	1	2253178	U30S SET SCHEMATIC
3	1	2253177	WEAR OPTION, AR450
4	2	2117756	PSM SI LOGO (MEDIUM)
5	1	2143804	GUARD PLATE, ID (PSM)
6	1	2156311	ID PLATE, PSM
7	2	2166954	PIN - CD
8	2	2114346	SCR-HH UNC GR8 0.625 X 5.5
9	2	2114528	NUT NYLOCK NC 0.625

UNLESS OTHERWISE NOTE:
1) WELD TOOTH ADAPTERS PER CPS 411

METRIC

A-RELEASED

LISTED

RSCHWART
RSCHWART

2024-06-26

783.kg

SEE CASCADE ENGINEERING STANDARDS FOR DRAFTING CONVENTIONS. UNLESS OTHERWISE SPECIFIED ALL DIMENSIONS ARE IN MILLIMETERS. ALL POSITION TOLERANCES APPLY AT Ⓜ. ENVELOPE REQUIREMENT, Ⓔ, APPLIES.
--

cascade corporation

THIS DRAWING IS THE PROPERTY OF CASCADE AND CONTAINS CONFIDENTIAL INFORMATION. DO NOT REPRODUCE OR USE WITHOUT WRITTEN APPROVAL.
-

BUCKET DX 235 30HD 20T

4T U30S, PINS, AR450 OPTION

1 | EBG-BRB-76800 | R- 0

CASCADE CORPORATION ©

IMF 2252549.1/0

CAPACITY: .72 CU. YDS./ .55 CU. M

2253190 | R- 0

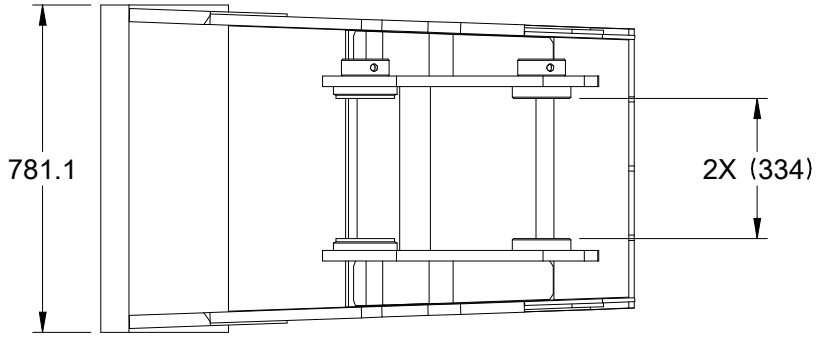

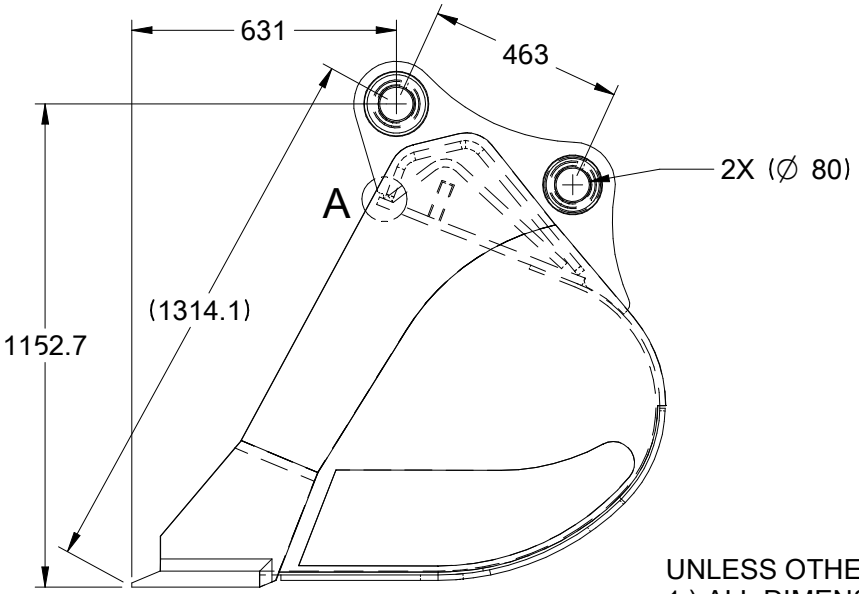

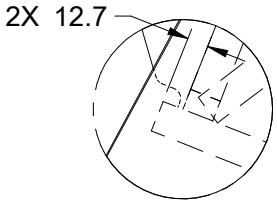

DETAIL A

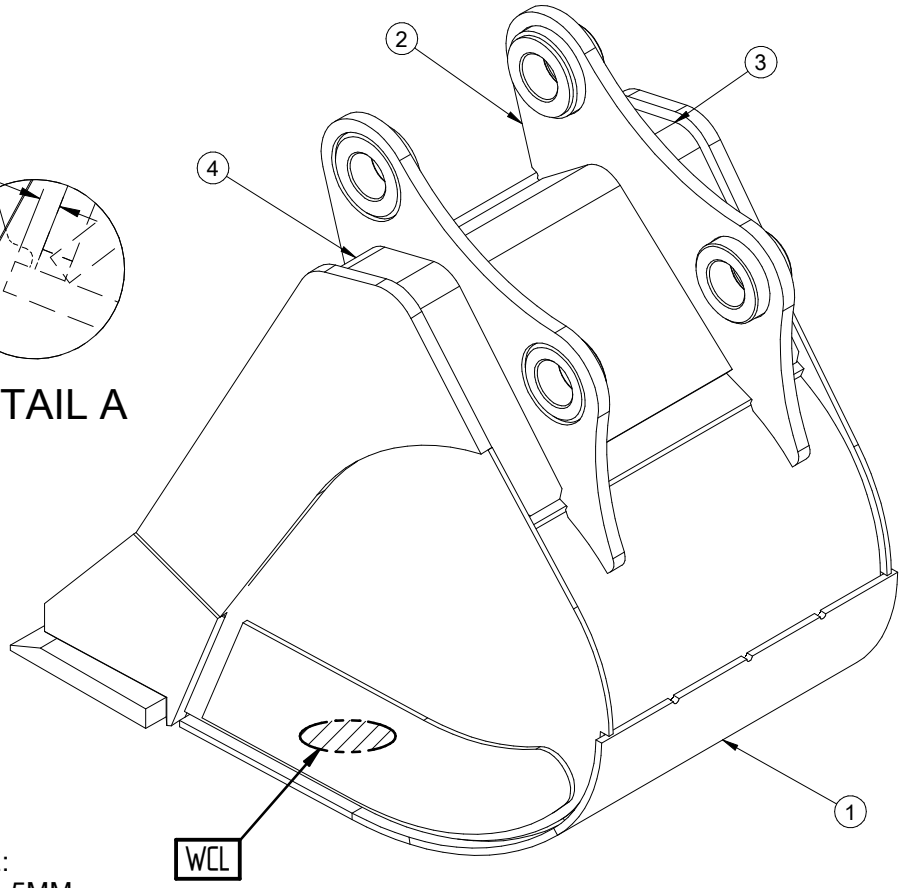

UNLESS OTHERWISE NOTE:
1.) ALL DIMENSIONS ARE ±1.5MM
2.) ALL WELDS FOLLOW SK-45835

METRIC

o	o-o	PN	-----
1	1	2253184	BKT WLDT
2	1	2253189	LUG WLDT
3	1	2253179	UPPER FROGG, LH
4	1	2253180	UPPER FROGG, RH

A-RELEASED

LISTED

RSCHWART

RSCHWART

2024-06-26

630.kg

SEE CASCADE ENGINEERING STANDARDS FOR DRAFTING CONVENTIONS. UNLESS OTHERWISE SPECIFIED ALL DIMENSIONS ARE IN MILLIMETERS. ALL POSITION TOLERANCES APPLY AT Ⓜ. ENVELOPE REQUIREMENT, Ⓔ, APPLIES.
--

cascade corporation

THIS DRAWING IS THE PROPERTY OF CASCADE AND CONTAINS CONFIDENTIAL INFORMATION. DO NOT REPRODUCE OR USE WITHOUT WRITTEN APPROVAL.
-

BKT ASSY

DX235 30 HD AR450 CORNER BITS

1 | 2253190 | R- 0

CASCADE CORPORATION ©

IMF 2224890.1/1

2253189 | R- 0

UNLESS OTHERWISE NOTED:
1) ALL DIMENSIONS ± 1.6
2) ALL WELDS FOLLOW CPS 69 CWS 1/39

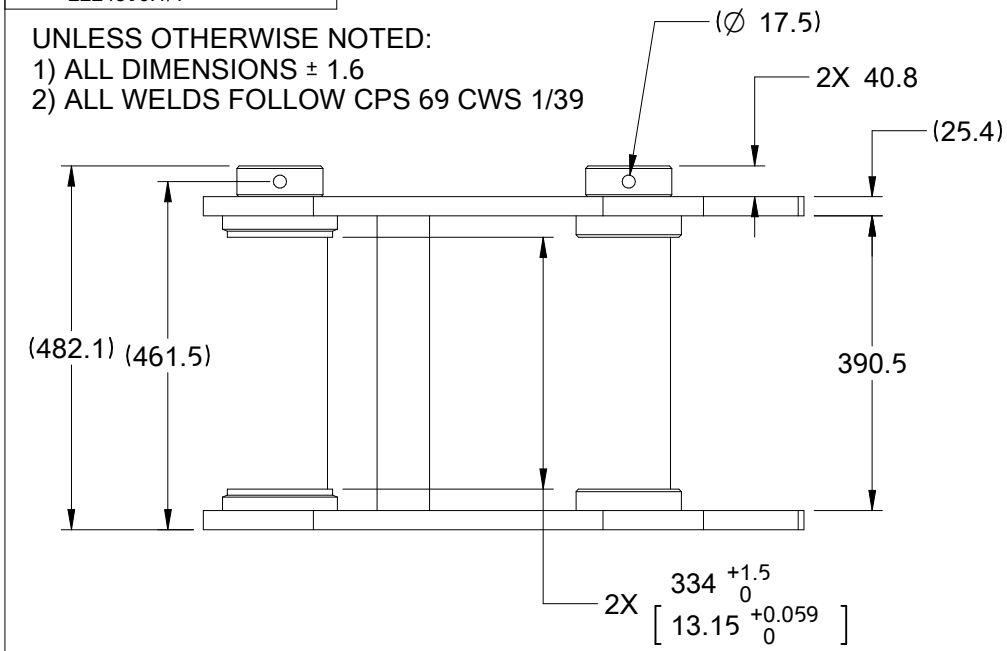

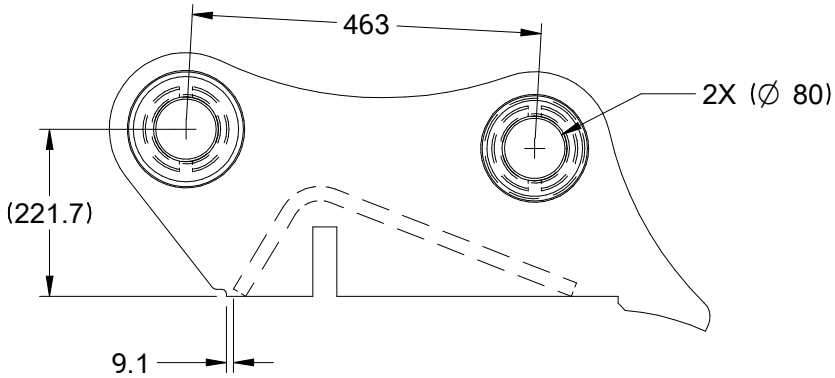

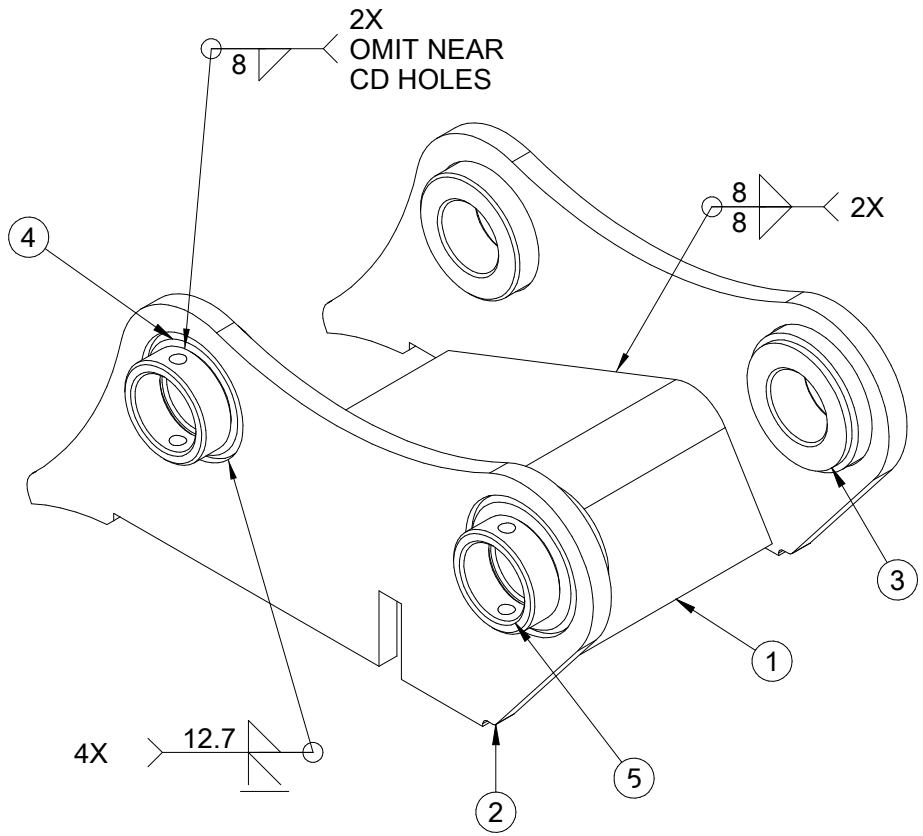

METRIC

o	o-o	PN	-----
1	1	2253185	CENTER FROGG
2	2	2224891	LUG PLATE
3	2	2168380	STEP BOSS
4	2	2168381	BOSS
5	2	2168405	BOSS RETAINER

A-RELEASED

LISTED

RSCHWART
RSCHWART

2024-06-26

112.kg

SEE CASCADE ENGINEERING STANDARDS FOR DRAFTING CONVENTIONS. UNLESS OTHERWISE SPECIFIED ALL DIMENSIONS ARE IN MILLIMETERS. ALL POSITION TOLERANCES APPLY AT Ⓜ. ENVELOPE REQUIREMENT, Ⓔ, APPLIES.
--

cascade corporation

THIS DRAWING IS THE PROPERTY OF CASCADE AND CONTAINS CONFIDENTIAL INFORMATION. DO NOT REPRODUCE OR USE WITHOUT WRITTEN APPROVAL.
-

LUG WLDT

DS DX225/DX235 SII BKT

CLEARS GEITH COUPLER

1 | 2253189 | R- 0

CASCADE CORPORATION ©

IMF 2224892.1/1

2253185 | R- 0

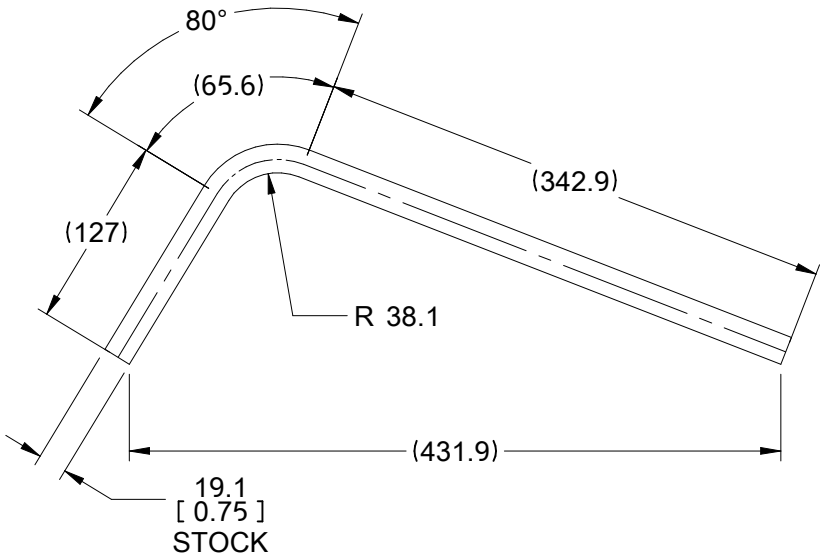

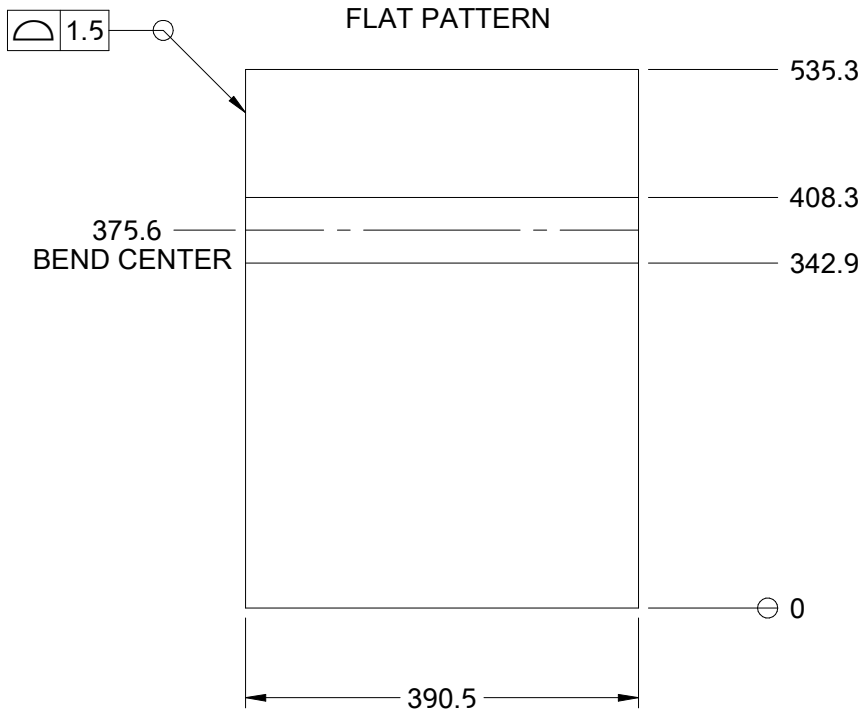

METRIC

A-RELEASED	02-01-87	RSCHWART RSCHWART 2024-06-25 31.2kg

SEE CASCADE ENGINEERING STANDARDS FOR DRAFTING CONVENTIONS. UNLESS OTHERWISE SPECIFIED ALL DIMENSIONS ARE IN MILLIMETERS. ALL POSITION TOLERANCES APPLY AT Ⓜ. ENVELOPE REQUIREMENT, Ⓔ, APPLIES.
--

cascade corporation

THIS DRAWING IS THE PROPERTY OF CASCADE AND CONTAINS CONFIDENTIAL INFORMATION. DO NOT REPRODUCE OR USE WITHOUT WRITTEN APPROVAL.
-

CENTER FROGG

CL3 SII DX235 0.750

CLEARS GEITH COUPLER

1 | 2253185 | R- 0

CASCADE CORPORATION ©

IMF 2252548.1/0

2253184 R- 0

NOTE UNLESS OTHERWISE SPECIFIED:
1. ALL WELDS FOLLOW SK-45835
EXCEPT CPS 69 CWS 6 FOR AR450 PARTS
2. ALL DIMENSIONS TOLERANCE ±.063
3. USE TEMPLATE 2202282 TO POSITION LOWER FROGG
4. CHECK EBG PN FOR ANY LEADING EDGE MACHINING

CAPACITY: .72 YDS³ / .55 M³

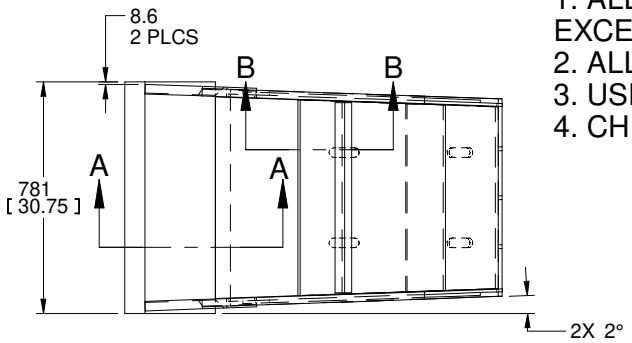

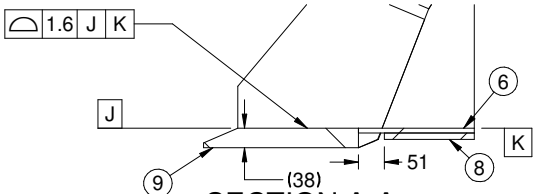

SECTION A-A

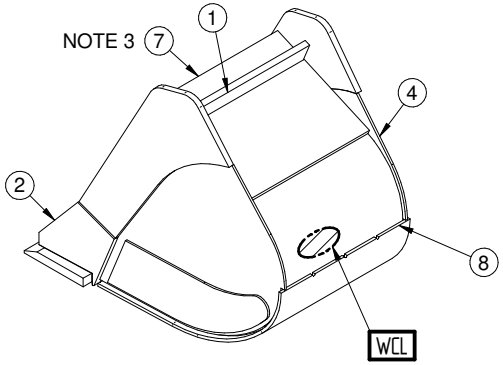

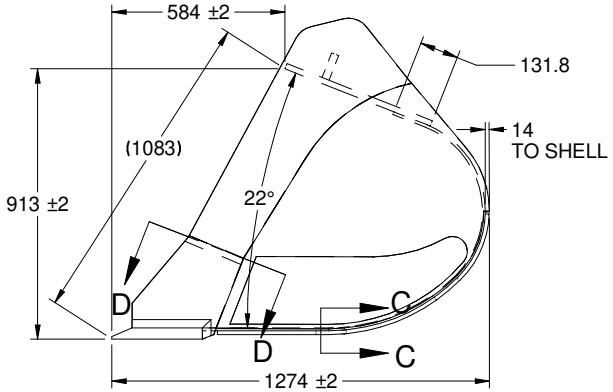

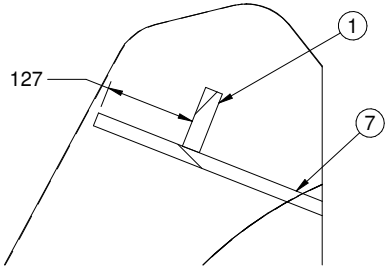

SECTION B-B

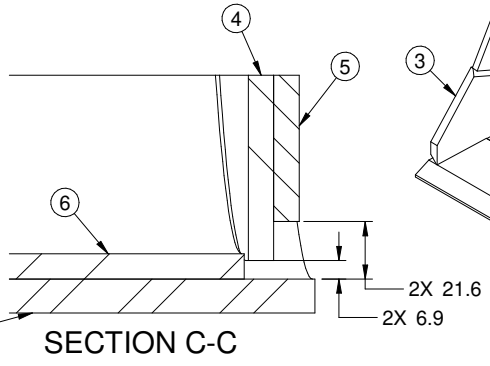

SECTION C-C

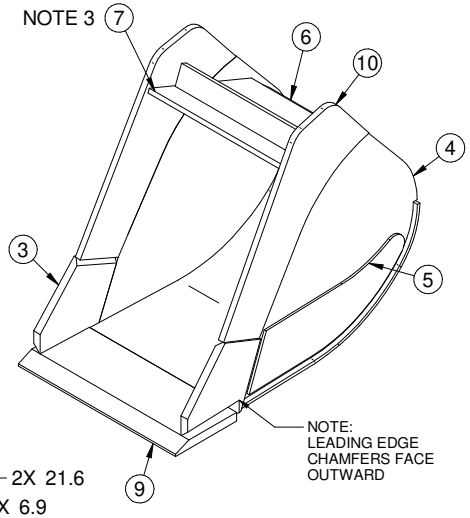

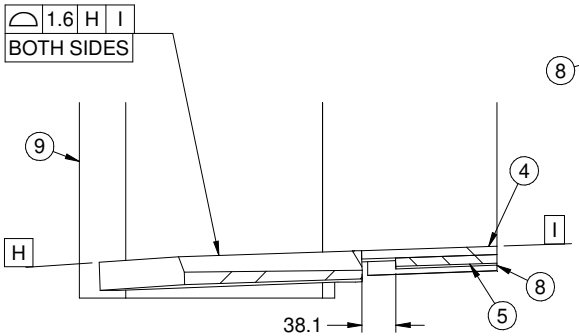

SECTION D-D

o	o-o	PN	-----
1	1	2211680	STIFFENER
2	1	2253182	CORNER BIT, RH, AR450
3	1	2253183	CORNER BIT, LH, AR450
4	2	2500003	PLATE SIDE
5	2	2500004	PLATE WEAR
6	1	2500772	SHELL
7	1	2500773	LOWER FROGG
8	1	2500774	WEAR STRIP
9	1	2500775	CUTTING EDGE
10	2	2501832	LEADING EDGE

METRIC

△	☒	🗎
A- RELEASED	LISTED	RSCHWART RSCHWART ✓
		2024-06-26
		498.kg

SEE CASCADE ENGINEERING STANDARDS FOR DRAFTING CONVENTIONS. UNLESS OTHERWISE SPECIFIED ALL DIMENSIONS ARE IN MILLIMETERS. ALL POSITION TOLERANCES APPLY AT Ⓜ. ENVELOPE REQUIREMENT, Ⓔ, APPLIES.

cascade corporation

THIS DRAWING IS THE PROPERTY OF CASCADE AND CONTAINS CONFIDENTIAL INFORMATION. DO NOT REPRODUCE OR USE WITHOUT WRITTEN APPROVAL.

BKT WLDT

CL3 30 HD AR450 CORNER BITS

1 2253184 R- 0

IMF 2501831.1/0	2253183	R- 0

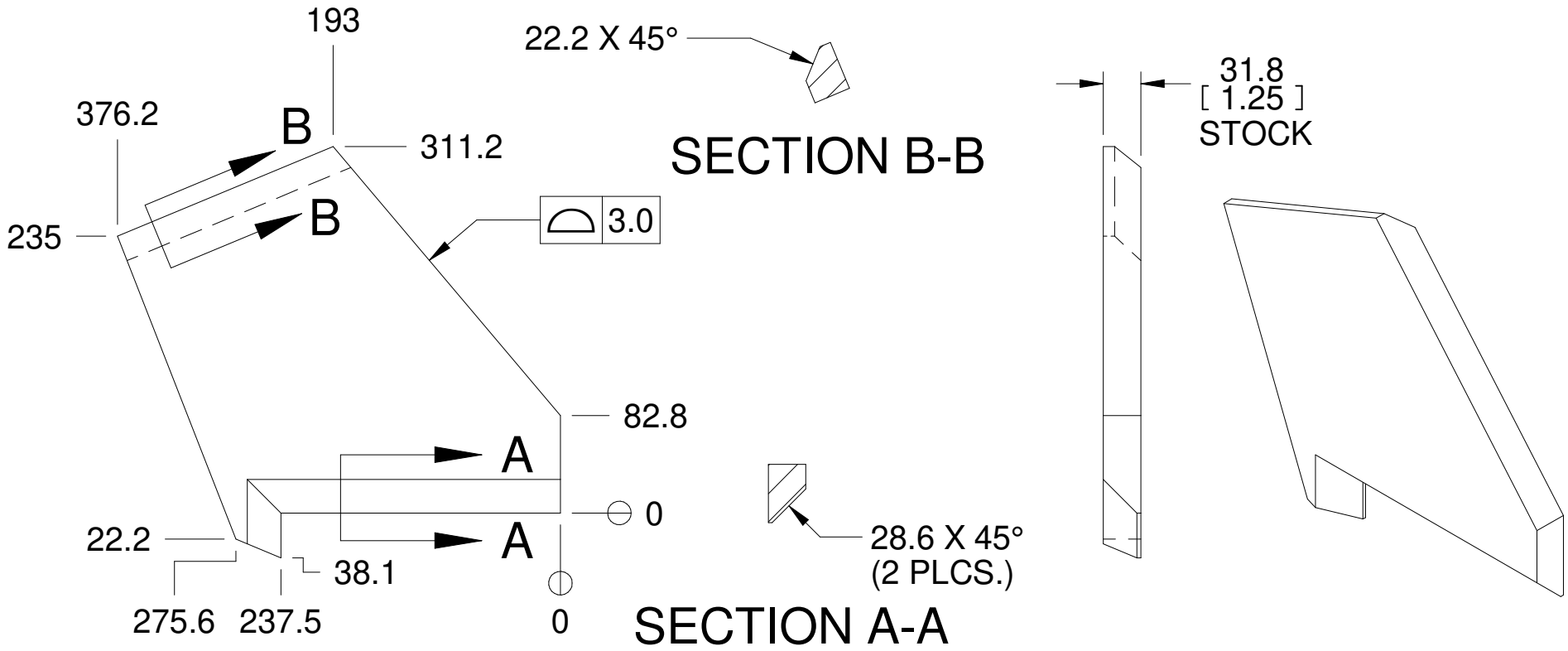

METRIC

△	☒	🗋
A- RELEASED	02-01-165	↘ RSCHWART ↯ RSCHWART ✓ ⇆
		2024-06-26
		18.1kg

SEE CASCADE ENGINEERING STANDARDS FOR DRAFTING CONVENTIONS. UNLESS OTHERWISE SPECIFIED ALL DIMENSIONS ARE IN MILLIMETERS. ALL POSITION TOLERANCES APPLY AT Ⓜ. ENVELOPE REQUIREMENT, Ⓔ, APPLIES.

cascade corporation

THIS DRAWING IS THE PROPERTY OF CASCADE AND CONTAINS CONFIDENTIAL
INFORMATION. DO NOT REPRODUCE OR USE WITHOUT WRITTEN APPROVAL.

CORNER BIT, LH, AR450

CL3 RB SII 1.25

1	2253183	R- 0

IMF 2501833.1/0	2253182	R- 0

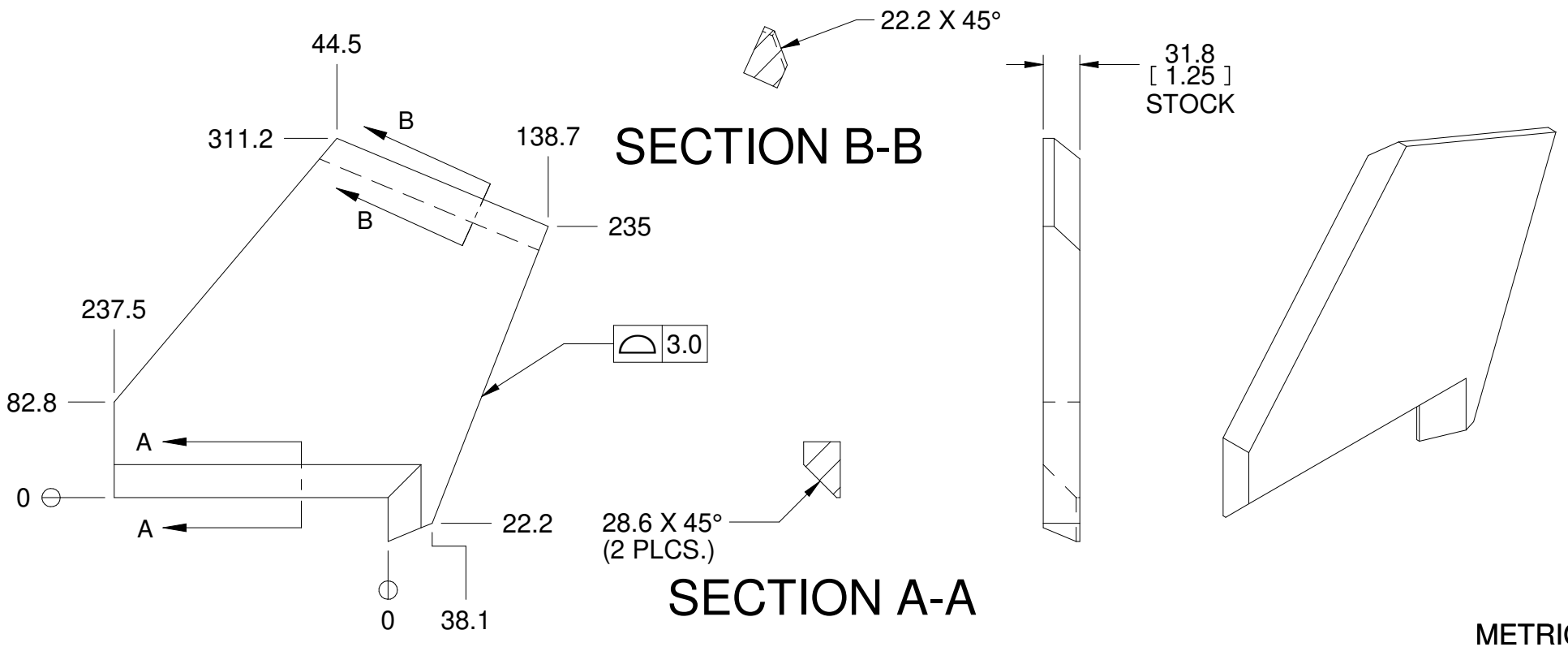

METRIC

△	☒	
A- RELEASED	02-01-165	RSCHWART RSCHWART ✓ ⇆
		2024-06-26
		18.1kg

SEE CASCADE ENGINEERING STANDARDS FOR DRAFTING CONVENTIONS. UNLESS OTHERWISE SPECIFIED ALL DIMENSIONS ARE IN MILLIMETERS. ALL POSITION TOLERANCES APPLY AT Ⓜ. ENVELOPE REQUIREMENT, Ⓔ, APPLIES.

cascade corporation

THIS DRAWING IS THE PROPERTY OF CASCADE AND CONTAINS CONFIDENTIAL
INFORMATION. DO NOT REPRODUCE OR USE WITHOUT WRITTEN APPROVAL.

CORNER BIT, RH, AR450

CL3 RB SII 1.25

1	2253182	R- 0

IMF 2501745.1/1	2253180	R- 0

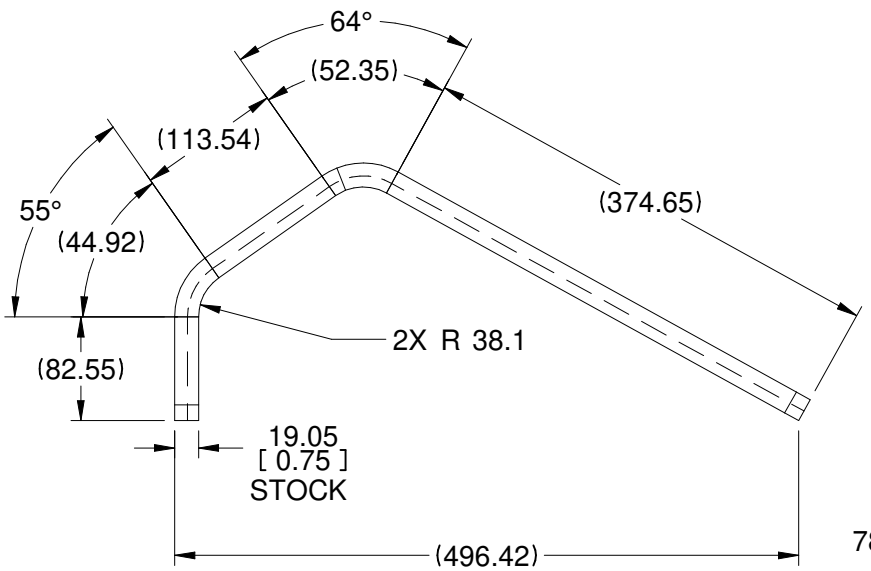

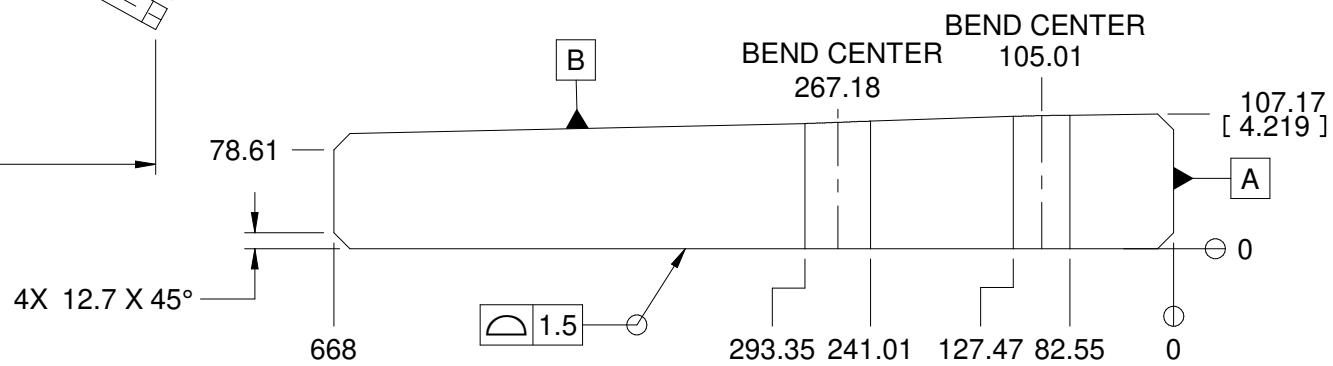

FLAT PATTERN

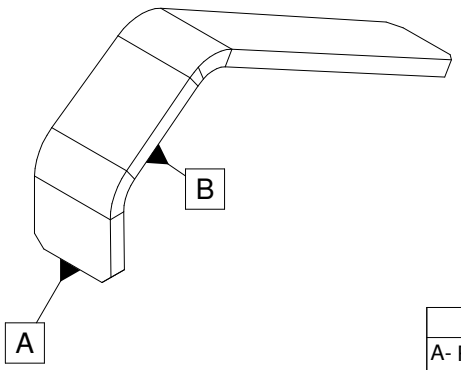

METRIC

△	☒	🗎
A- RELEASED	02-01-87	↘ RSCHWART ↯ RSCHWART ✓ ⇆
		2024-06-26
		9.87kg

SEE CASCADE ENGINEERING STANDARDS FOR DRAFTING CONVENTIONS. UNLESS OTHERWISE SPECIFIED ALL DIMENSIONS ARE IN MILLIMETERS. ALL POSITION TOLERANCES APPLY AT Ⓜ. ENVELOPE REQUIREMENT, Ⓔ, APPLIES.

ALL DIMENSIONS ARE BASIC

cascade corporation

THIS DRAWING IS THE PROPERTY OF CASCADE AND CONTAINS CONFIDENTIAL
INFORMATION. DO NOT REPRODUCE OR USE WITHOUT WRITTEN APPROVAL.

UPPER FROGG, RH

.750 CL3 4.25

1	2253180	R- 0

IMF 2501744.1/1	2253179	R- 0

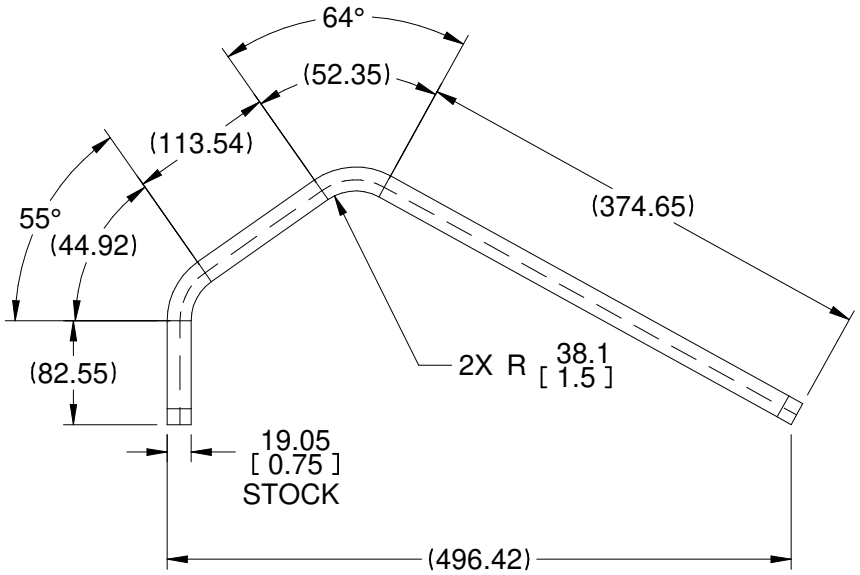

FLAT PATTERN

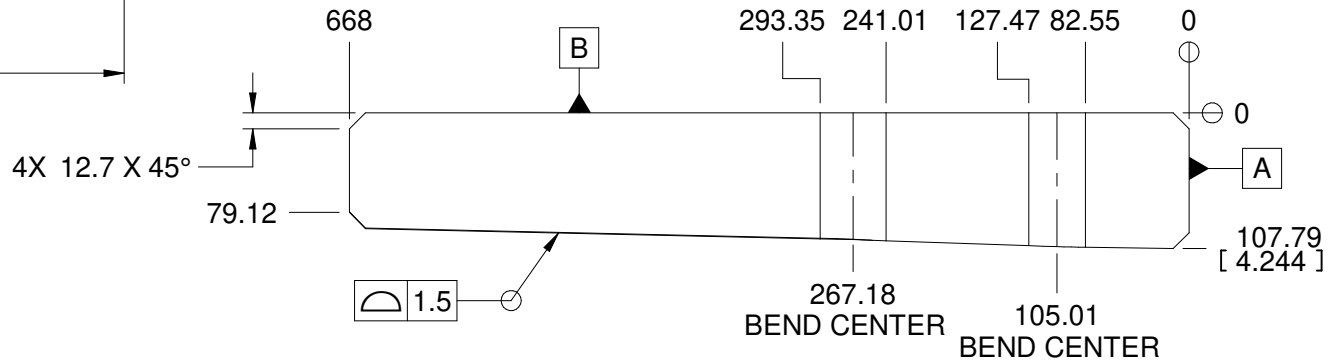

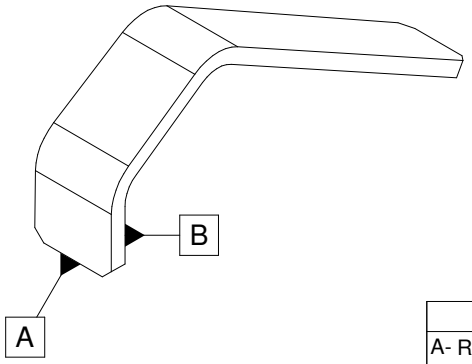

METRIC

△	☒	🗎
A- RELEASED	02-01-87	RSCHWART RSCHWART ✓ ⇆
		2024-06-26
		9.89kg

SEE CASCADE ENGINEERING STANDARDS FOR DRAFTING CONVENTIONS. UNLESS OTHERWISE SPECIFIED ALL DIMENSIONS ARE IN MILLIMETERS. ALL POSITION TOLERANCES APPLY AT Ⓜ. ENVELOPE REQUIREMENT, Ⓔ, APPLIES.

ALL DIMENSIONS ARE BASIC

cascade corporation

THIS DRAWING IS THE PROPERTY OF CASCADE AND CONTAINS CONFIDENTIAL
INFORMATION. DO NOT REPRODUCE OR USE WITHOUT WRITTEN APPROVAL.

UPPER FROGG, LH

.750 CL3 4.25

1	2253179	R- 0

IMF 2251229.1/0

2253178 | R- 0

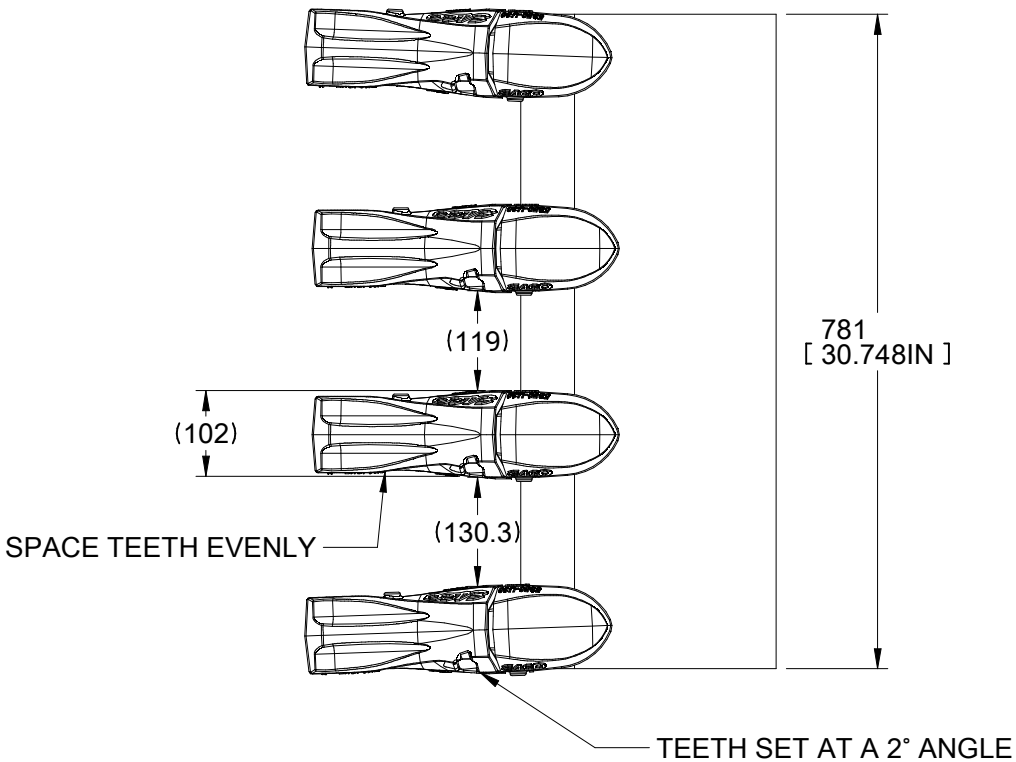

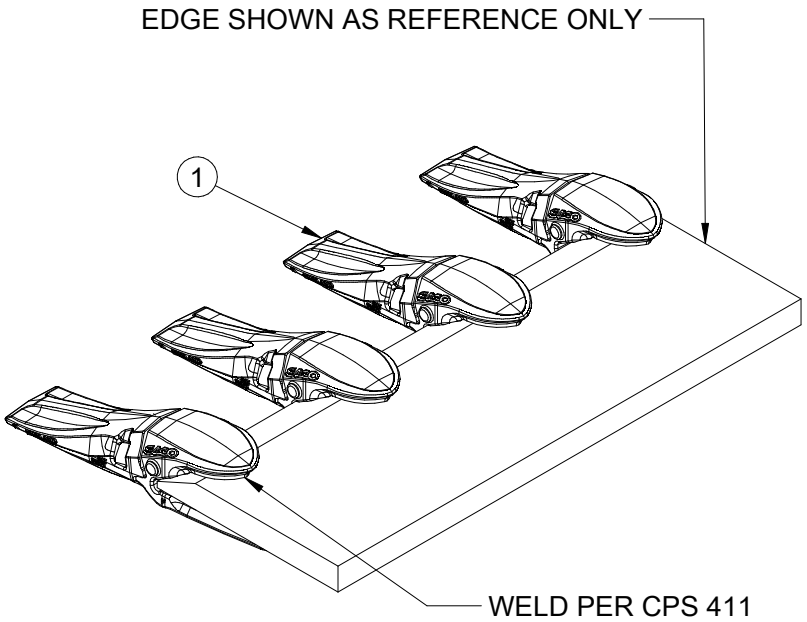

METRIC

o	o-o	PN	-----
1	4	2168326	TOOTH ASSY

A-RELEASED	LISTED	RSCHWART
		RSCHWART
		✓
		⇆
		2024-06-25
		54.4kg

SEE CASCADE ENGINEERING STANDARDS FOR DRAFTING CONVENTIONS. UNLESS OTHERWISE SPECIFIED ALL DIMENSIONS ARE IN MILLIMETERS. ALL POSITION TOLERANCES APPLY AT Ⓜ. ENVELOPE REQUIREMENT, Ⓔ, APPLIES.
--

cascade corporation

THIS DRAWING IS THE PROPERTY OF CASCADE AND CONTAINS CONFIDENTIAL INFORMATION. DO NOT REPRODUCE OR USE WITHOUT WRITTEN APPROVAL.
-

U30S SET SCHEMATIC

30 4T CE 1.50

1 | 2253178 | R- 0

CASCADE CORPORATION ©

IMF

o	o-o	PN	-----
1	1	2253174	SKID PLATE, RH, AR450
2	1	2253175	SKID PLATE, LH, AR450
3	7	2253176	WEAR BAR, AR450

2253177 | R- 0

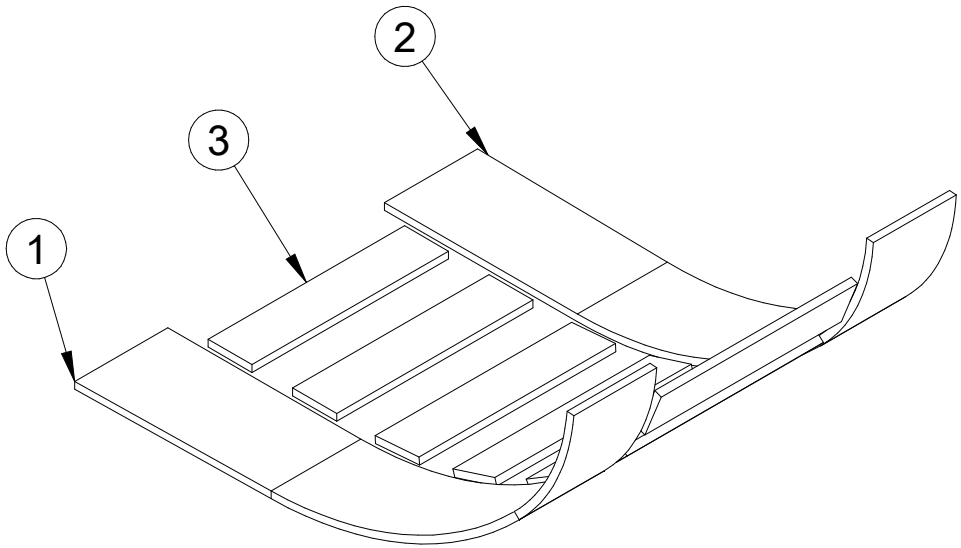

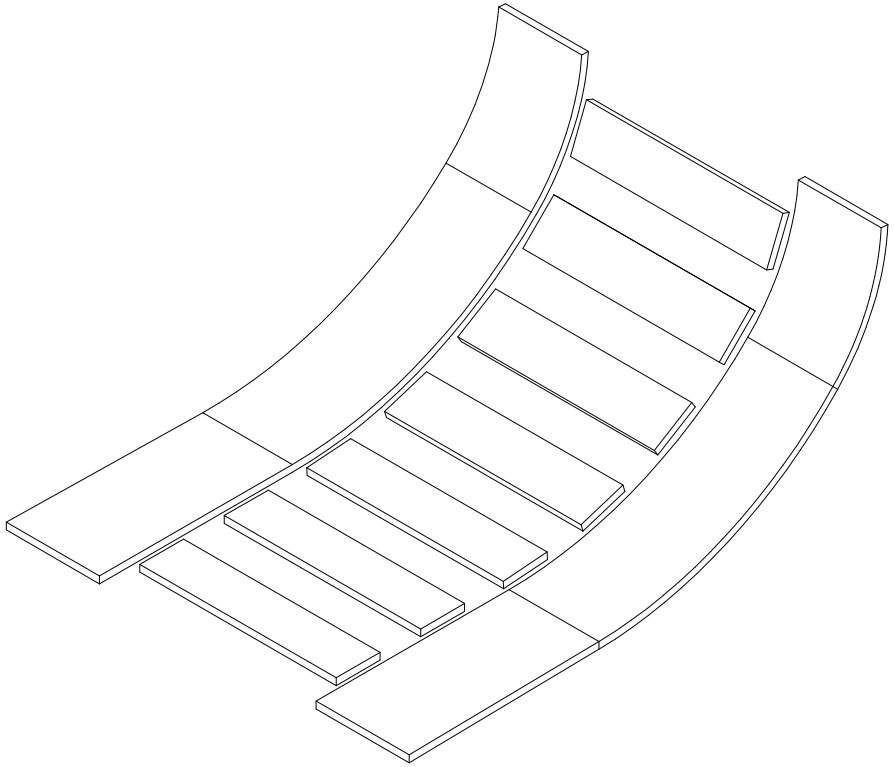

SEE SK-28100 FOR WELD INSTRUCTION

METRIC

A-RELEASED	LISTED	RSCHWART RSCHWART 2024-06-26 57.3kg

SEE CASCADE ENGINEERING STANDARDS FOR DRAFTING CONVENTIONS. UNLESS OTHERWISE SPECIFIED ALL DIMENSIONS ARE IN MILLIMETERS. ALL POSITION TOLERANCES APPLY AT Ⓜ. ENVELOPE REQUIREMENT, Ⓔ, APPLIES.
--

cascade corporation

THIS DRAWING IS THE PROPERTY OF CASCADE AND CONTAINS CONFIDENTIAL INFORMATION. DO NOT REPRODUCE OR USE WITHOUT WRITTEN APPROVAL.
-

WEAR OPTION, AR450

CL3 30" BKT

1 | 2253177 | R- 0

CASCADE CORPORATION ©

IMF 2240063.1/1

2253176 | R- 0

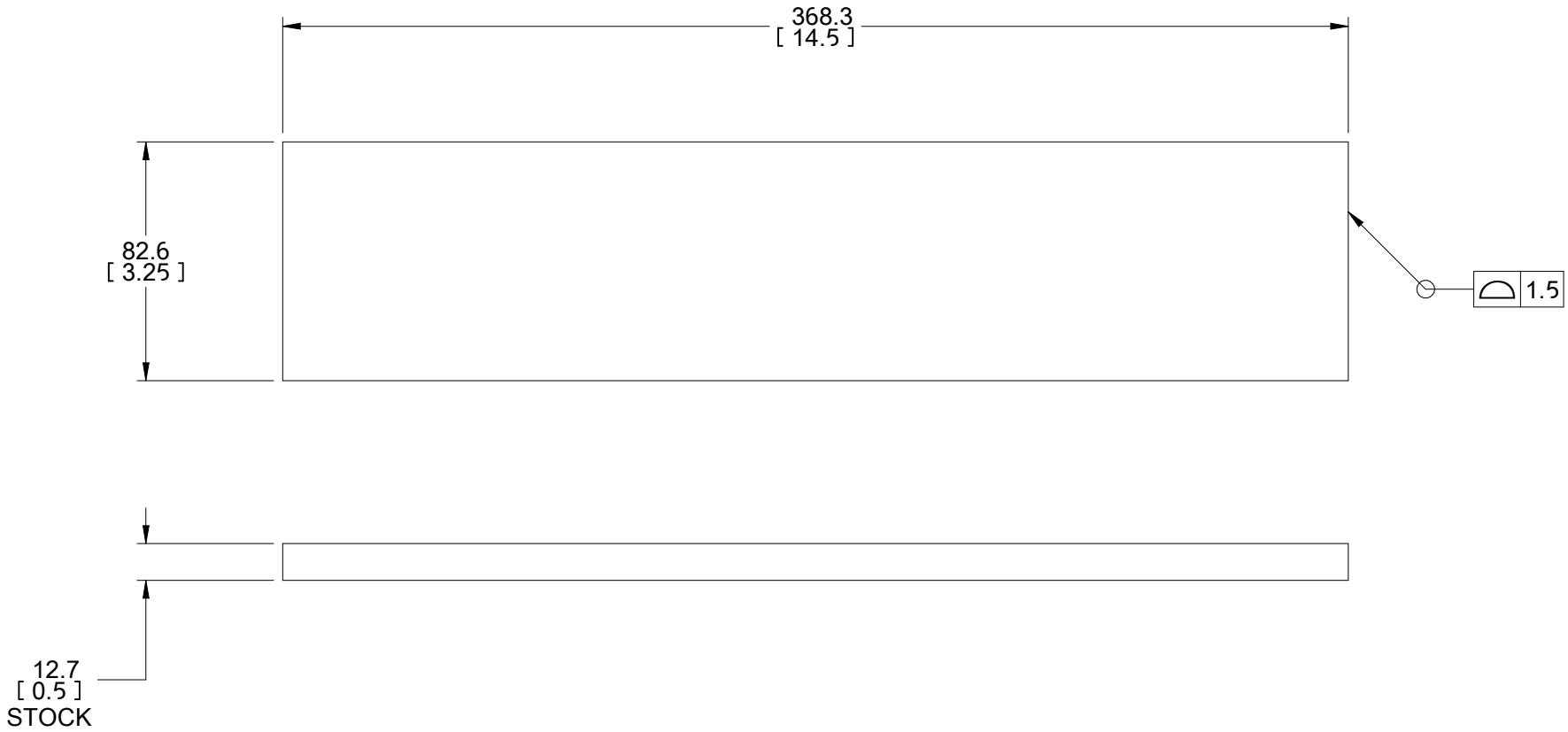

METRIC

A-RELEASED	02-01-165	RSCHWART RSCHWART ✓ 2024-06-26 3.02kg

SEE CASCADE ENGINEERING STANDARDS FOR DRAFTING CONVENTIONS. UNLESS OTHERWISE SPECIFIED ALL DIMENSIONS ARE IN MILLIMETERS. ALL POSITION TOLERANCES APPLY AT Ⓜ. ENVELOPE REQUIREMENT, Ⓔ, APPLIES.
--

cascade corporation

THIS DRAWING IS THE PROPERTY OF CASCADE AND CONTAINS CONFIDENTIAL INFORMATION. DO NOT REPRODUCE OR USE WITHOUT WRITTEN APPROVAL.
-

WEAR BAR, AR450

0.50 X 3.250 X 14.50

1 | 2253176 | R- 0

CASCADE CORPORATION ©

IMF 2226403.1/1

2253175 | R- 0

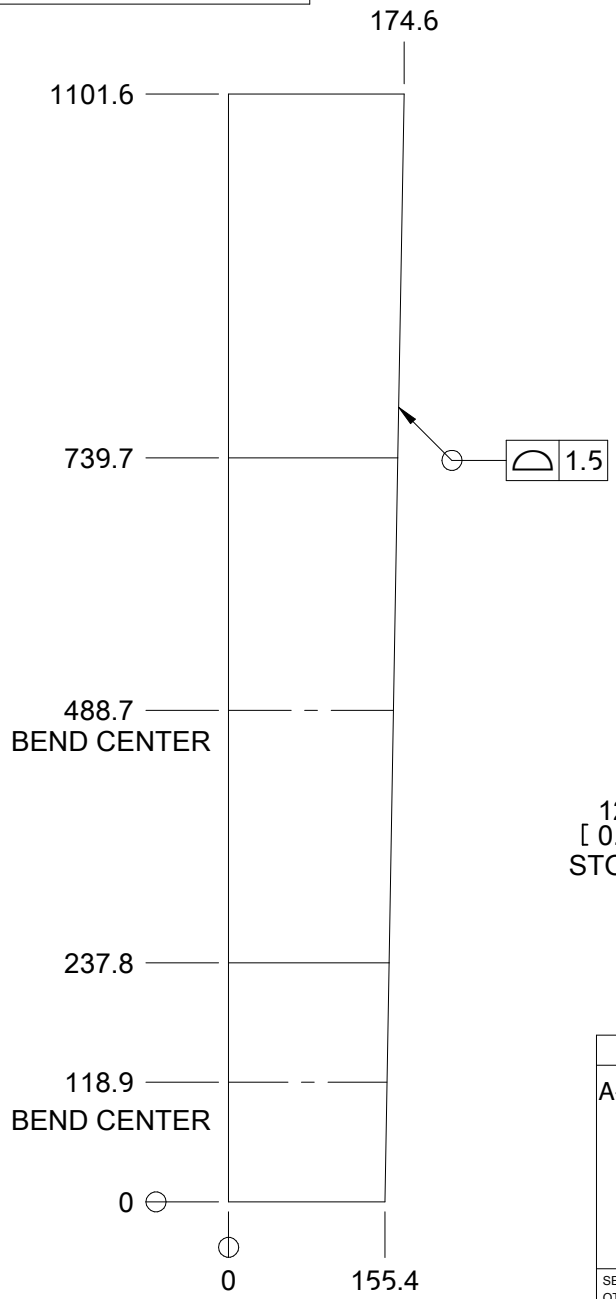

FLAT PATTERN

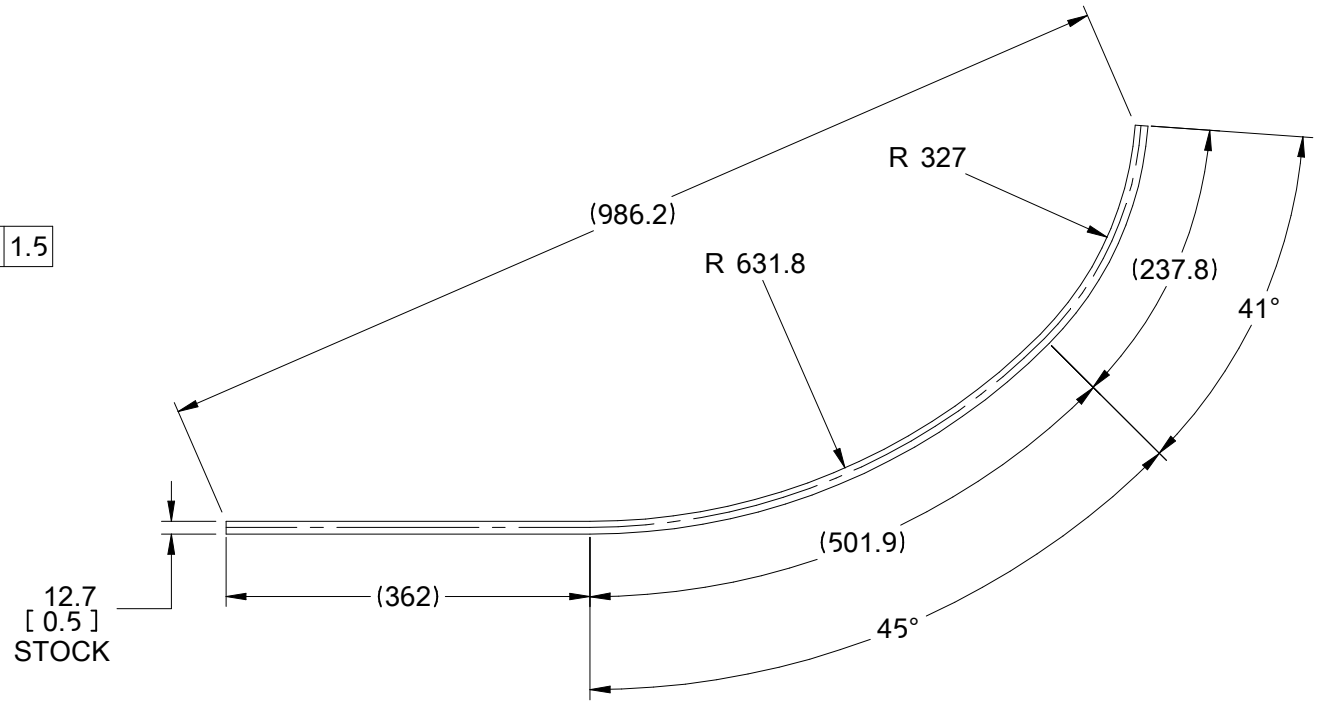

METRIC

A-RELEASED	02-01-165	RSCHWART RSCHWART 2024-06-26 18.0kg

SEE CASCADE ENGINEERING STANDARDS FOR DRAFTING CONVENTIONS. UNLESS OTHERWISE SPECIFIED ALL DIMENSIONS ARE IN MILLIMETERS. ALL POSITION TOLERANCES APPLY AT Ⓜ. ENVELOPE REQUIREMENT, Ⓔ, APPLIES.
--

cascade corporation

THIS DRAWING IS THE PROPERTY OF CASCADE AND CONTAINS CONFIDENTIAL INFORMATION. DO NOT REPRODUCE OR USE WITHOUT WRITTEN APPROVAL.

SKID PLATE, LH, AR450

CL3 0.50

1 | 2253175 | R- 0

CASCADE CORPORATION ©

IMF 2226404.1/1

2253174 | R- 0

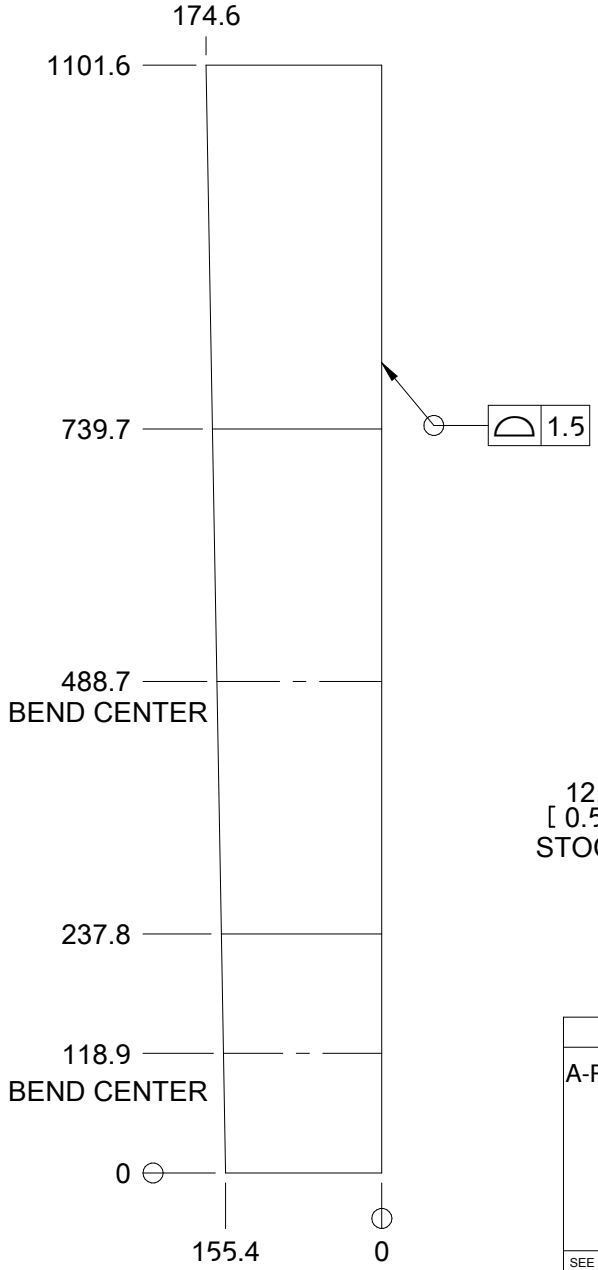

FLAT PATTERN

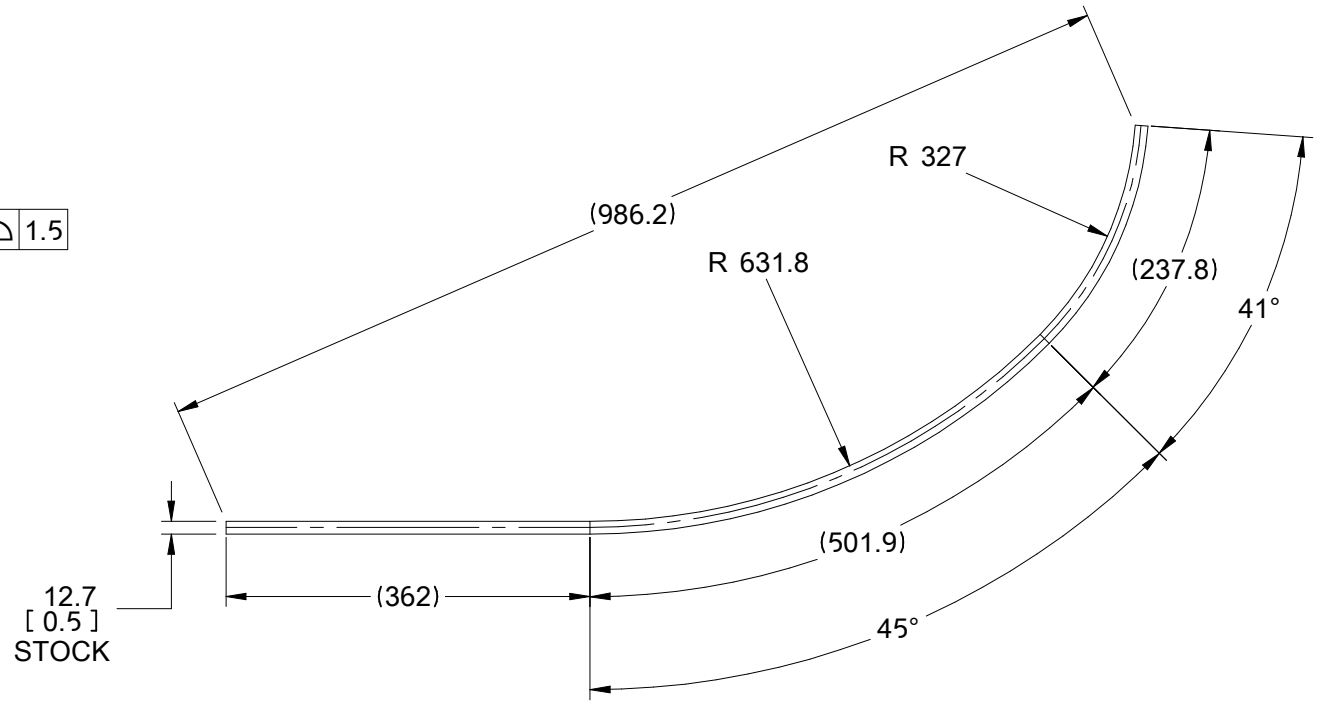

METRIC

A-RELEASED	02-01-165	RSCHWART RSCHWART 2024-06-26 18.0kg

SEE CASCADE ENGINEERING STANDARDS FOR DRAFTING CONVENTIONS. UNLESS OTHERWISE SPECIFIED ALL DIMENSIONS ARE IN MILLIMETERS. ALL POSITION TOLERANCES APPLY AT Ⓜ. ENVELOPE REQUIREMENT, Ⓔ, APPLIES.
--

cascade corporation

THIS DRAWING IS THE PROPERTY OF CASCADE AND CONTAINS CONFIDENTIAL INFORMATION. DO NOT REPRODUCE OR USE WITHOUT WRITTEN APPROVAL.
-

SKID PLATE, RH, AR450

CL3 0.50

1 | 2253174 | R- 0

CASCADE CORPORATION ©

IMF

2224890 | R- 1

UNLESS OTHERWISE NOTED:
1) ALL DIMENSIONS ± 1.6
2) ALL WELDS FOLLOW CPS 69 CWS 1/39

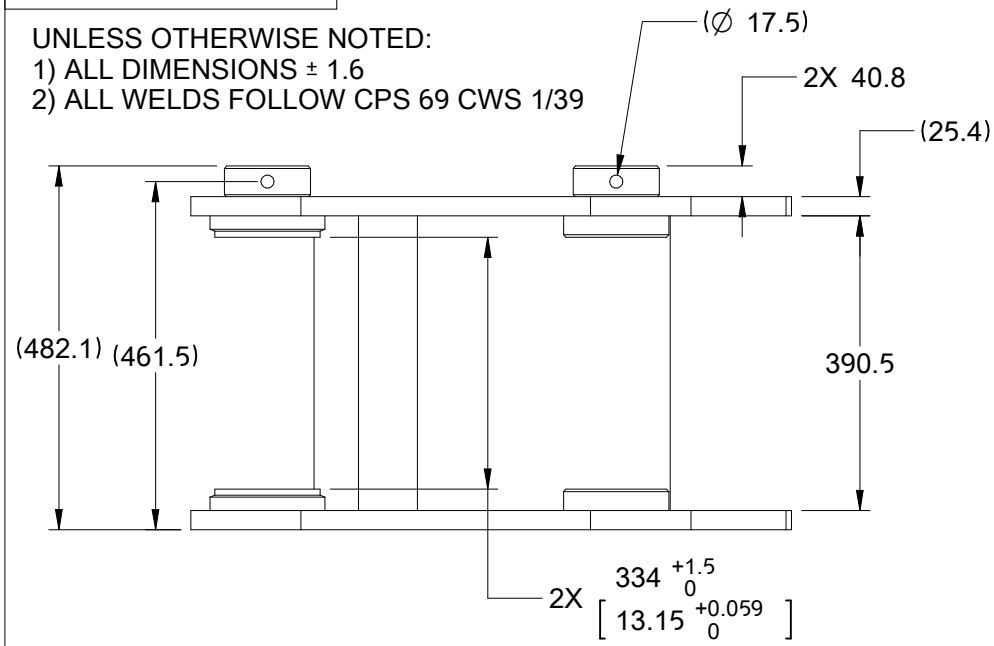

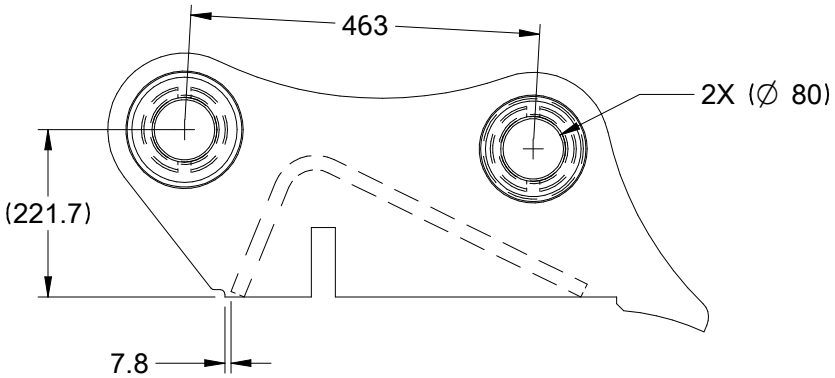

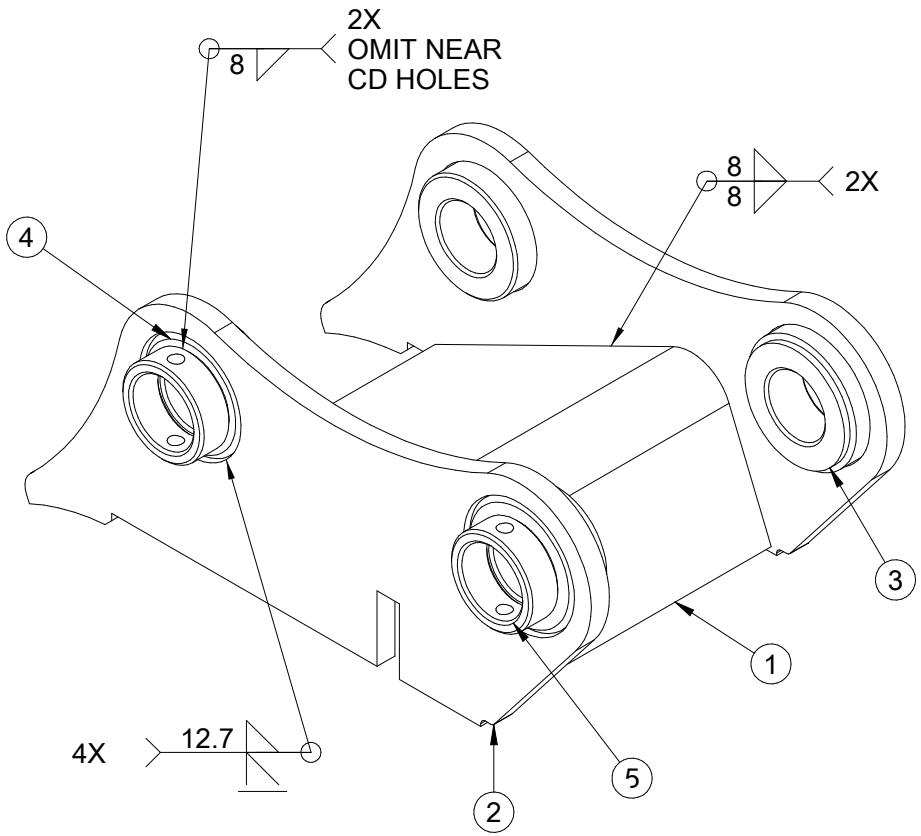

METRIC

o	o-o	PN	-----
1	1	2224892	CENTER FROGG
2	2	2224891	LUG PLATE
3	2	2168380	STEP BOSS
4	2	2168381	BOSS
5	2	2168405	BOSS RETAINER

A-ADD TO TEAMCENTER

LISTED

RSCHWART
RSCHWART

2024-06-26

116.kg

SEE CASCADE ENGINEERING STANDARDS FOR DRAFTING CONVENTIONS. UNLESS OTHERWISE SPECIFIED ALL DIMENSIONS ARE IN MILLIMETERS. ALL POSITION TOLERANCES APPLY AT Ⓜ. ENVELOPE REQUIREMENT, Ⓔ, APPLIES.
--

cascade corporation

THIS DRAWING IS THE PROPERTY OF CASCADE AND CONTAINS CONFIDENTIAL INFORMATION. DO NOT REPRODUCE OR USE WITHOUT WRITTEN APPROVAL.
-

LUG WLDT

DS DX225/DX235 SII BKT

1 | 2224890 | R- 1

CASCADE CORPORATION ©

IMF

2224891 | R- 1

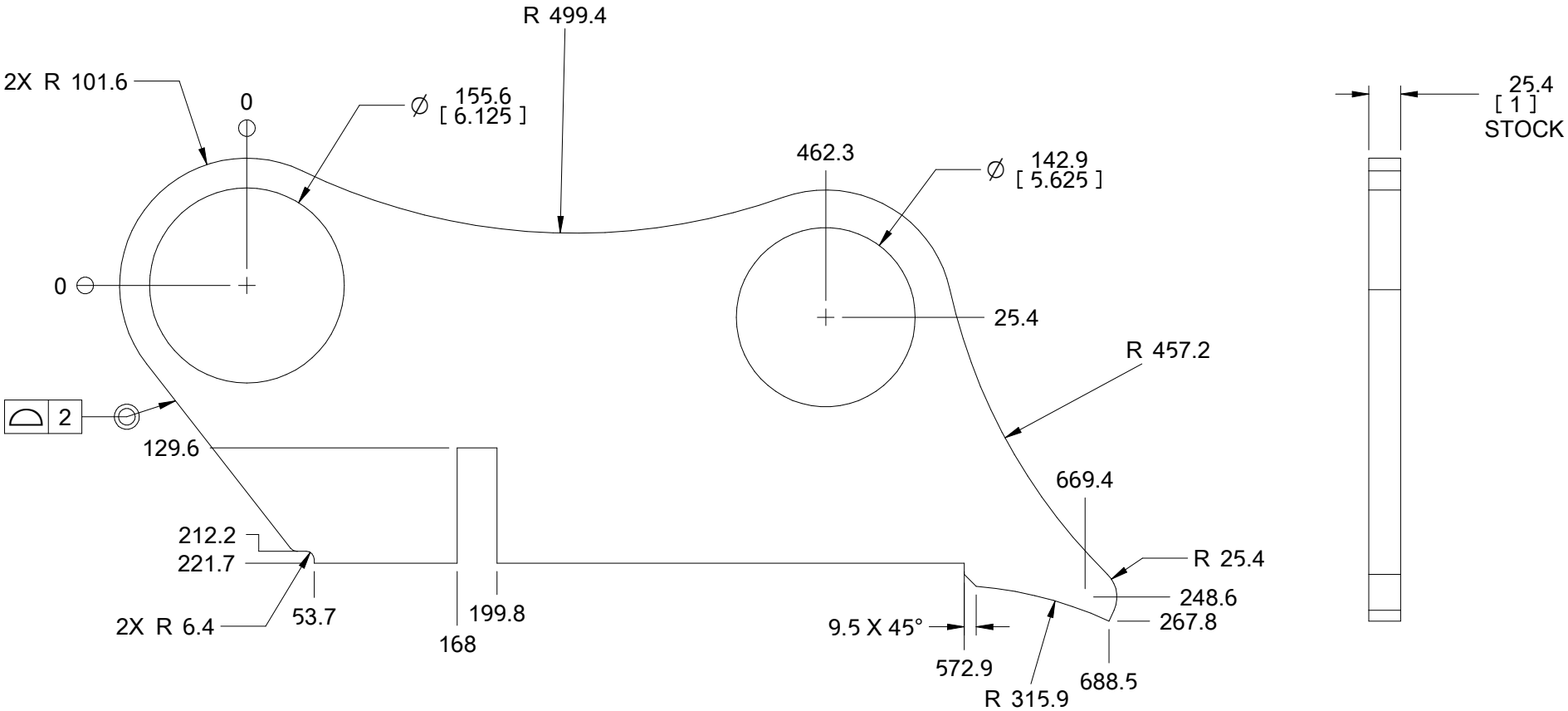

METRIC

A-ADD TO TEAMCENTER B-LARGER HOLE SIZE	02-01-87	RSCHWART RSCHWART 2024-06-26 33.7kg

SEE CASCADE ENGINEERING STANDARDS FOR DRAFTING CONVENTIONS. UNLESS OTHERWISE SPECIFIED ALL DIMENSIONS ARE IN MILLIMETERS. ALL POSITION TOLERANCES APPLY AT Ⓜ. ENVELOPE REQUIREMENT, Ⓔ, APPLIES.
--

cascade corporation

THIS DRAWING IS THE PROPERTY OF CASCADE AND CONTAINS CONFIDENTIAL INFORMATION. DO NOT REPRODUCE OR USE WITHOUT WRITTEN APPROVAL.
-

LUG PLATE

DS DX225 SII BKT

1 | 2224891 | R- 1

CASCADE CORPORATION ©

IMF

2224892 | R- 1

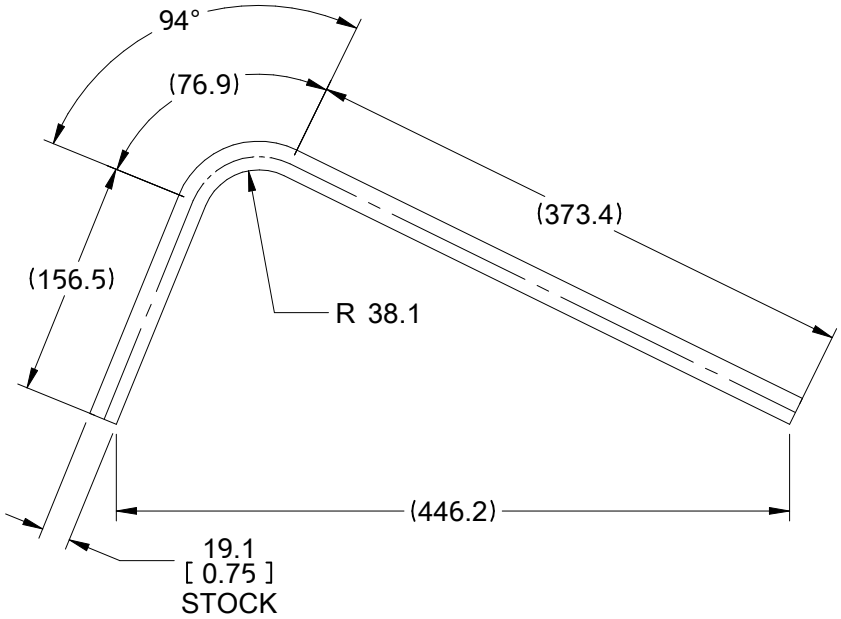

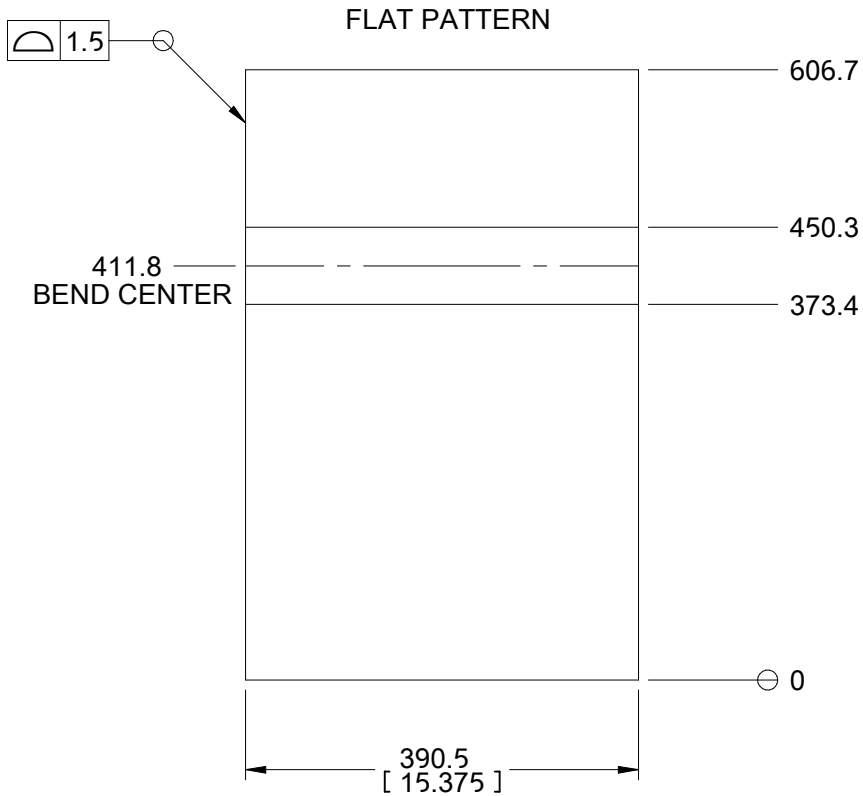

METRIC

A-ADD TO TEAMCENTER	02-01-87	RSCHWART RSCHWART 2024-06-26 35.4kg

SEE CASCADE ENGINEERING STANDARDS FOR DRAFTING CONVENTIONS. UNLESS OTHERWISE SPECIFIED ALL DIMENSIONS ARE IN MILLIMETERS. ALL POSITION TOLERANCES APPLY AT Ⓜ. ENVELOPE REQUIREMENT, Ⓔ, APPLIES.
--

cascade corporation

THIS DRAWING IS THE PROPERTY OF CASCADE AND CONTAINS CONFIDENTIAL INFORMATION. DO NOT REPRODUCE OR USE WITHOUT WRITTEN APPROVAL.
-

CENTER FROGG

CL3 SII 15.375 X 0.750

1 | 2224892 | R- 1

CASCADE CORPORATION ©

IMF

2168380 | R- 1

UNLESS OTHERWISE NOTED:
1) ALL DIMENSIONS ±0.25 MM

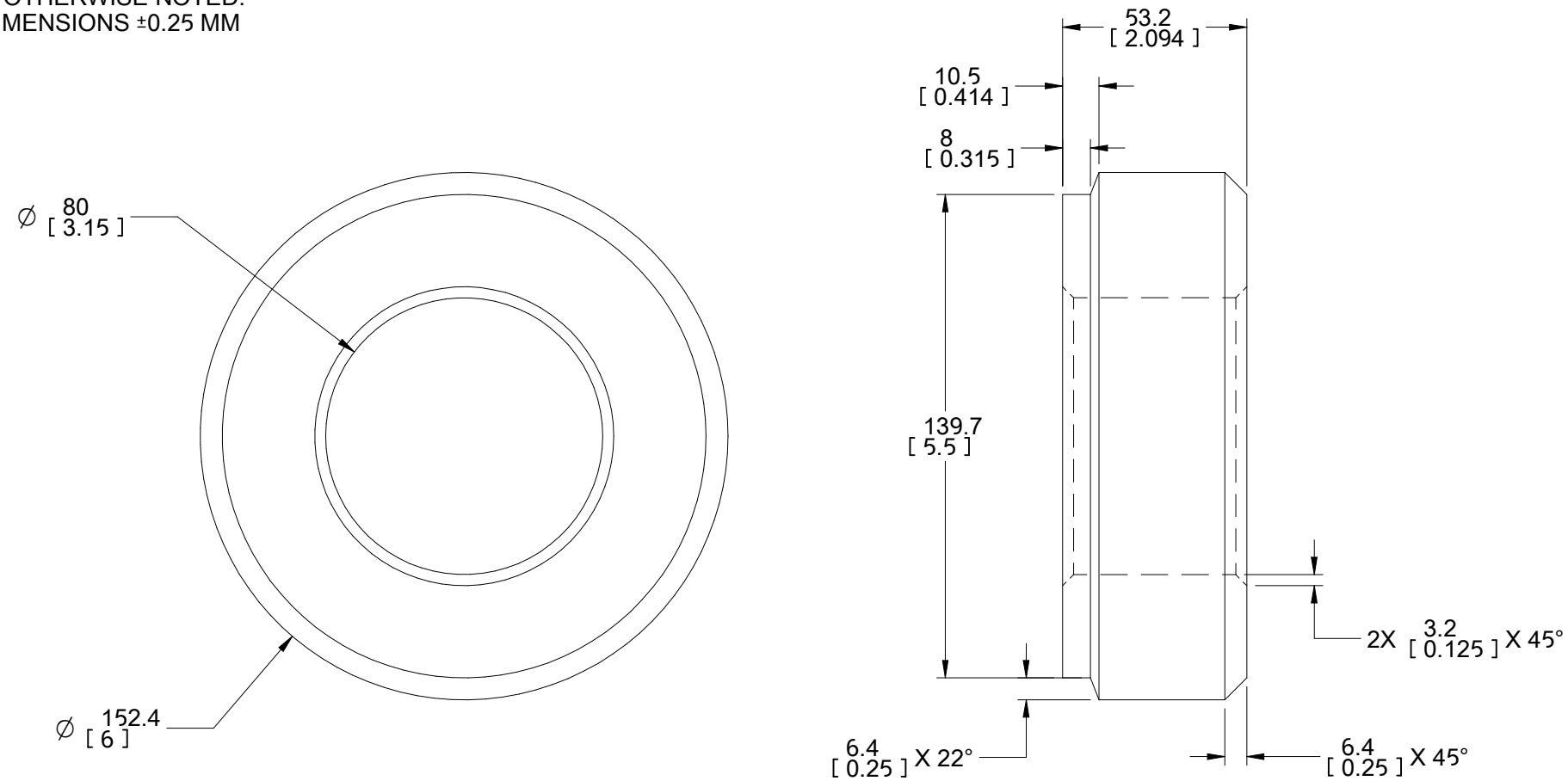

METRIC

A-ADD TO TEAMCENTER	01-46-119	RSCHWART RSCHWART 2024-06-25 5.19kg

SEE CASCADE ENGINEERING STANDARDS FOR DRAFTING CONVENTIONS. UNLESS OTHERWISE SPECIFIED ALL DIMENSIONS ARE IN MILLIMETERS. ALL POSITION TOLERANCES APPLY AT Ⓜ. ENVELOPE REQUIREMENT, Ⓔ, APPLIES.
--

cascade corporation

THIS DRAWING IS THE PROPERTY OF CASCADE AND CONTAINS CONFIDENTIAL INFORMATION. DO NOT REPRODUCE OR USE WITHOUT WRITTEN APPROVAL.
-

STEP BOSS

3.151 X 6.000 X 2.094

1 | 2168380 | R- 1

CASCADE CORPORATION ©

IMF

2168381 | R- 1

UNLESS OTHERWISE NOTED:
1) ALL DIMENSIONS ±0.25 MM

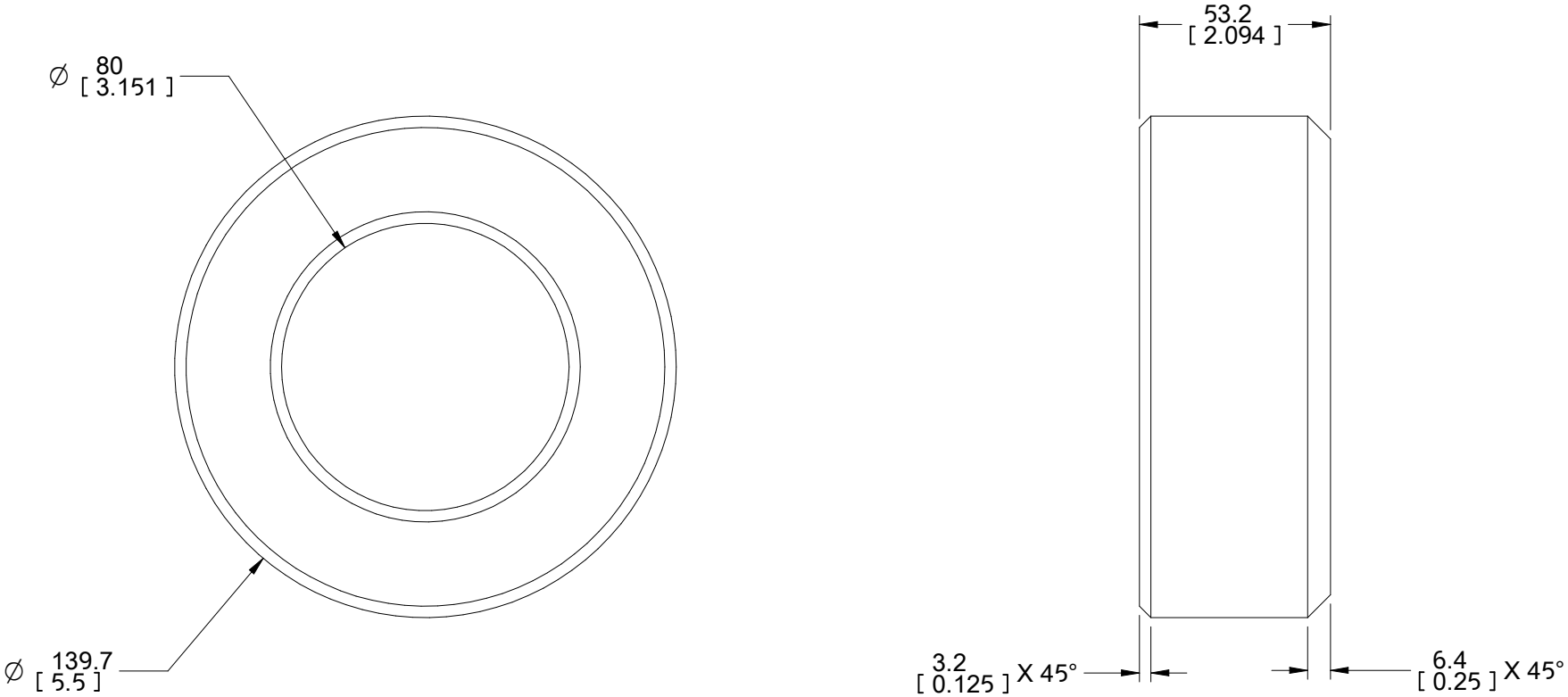

METRIC

A-ADD TO TEAMCENTER	01-46-119	RSCHWART RSCHWART 2024-06-25 4.18kg

SEE CASCADE ENGINEERING STANDARDS FOR DRAFTING CONVENTIONS. UNLESS OTHERWISE SPECIFIED ALL DIMENSIONS ARE IN MILLIMETERS. ALL POSITION TOLERANCES APPLY AT Ⓜ. ENVELOPE REQUIREMENT, Ⓔ, APPLIES.
--

cascade corporation

THIS DRAWING IS THE PROPERTY OF CASCADE AND CONTAINS CONFIDENTIAL INFORMATION. DO NOT REPRODUCE OR USE WITHOUT WRITTEN APPROVAL.
-

BOSS

3.151 X 5.500 X 2.094

1 | 2168381 | R- 1

CASCADE CORPORATION ©

IMF

2168405 | R- 1

UNLESS OTHERWISE NOTED:
1) ALL DIMENSIONS ±0.25 MM

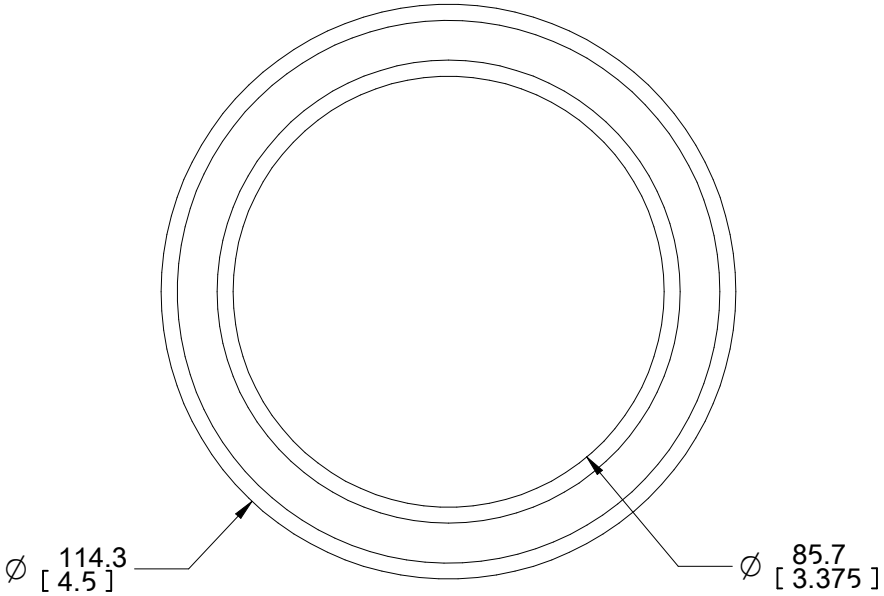

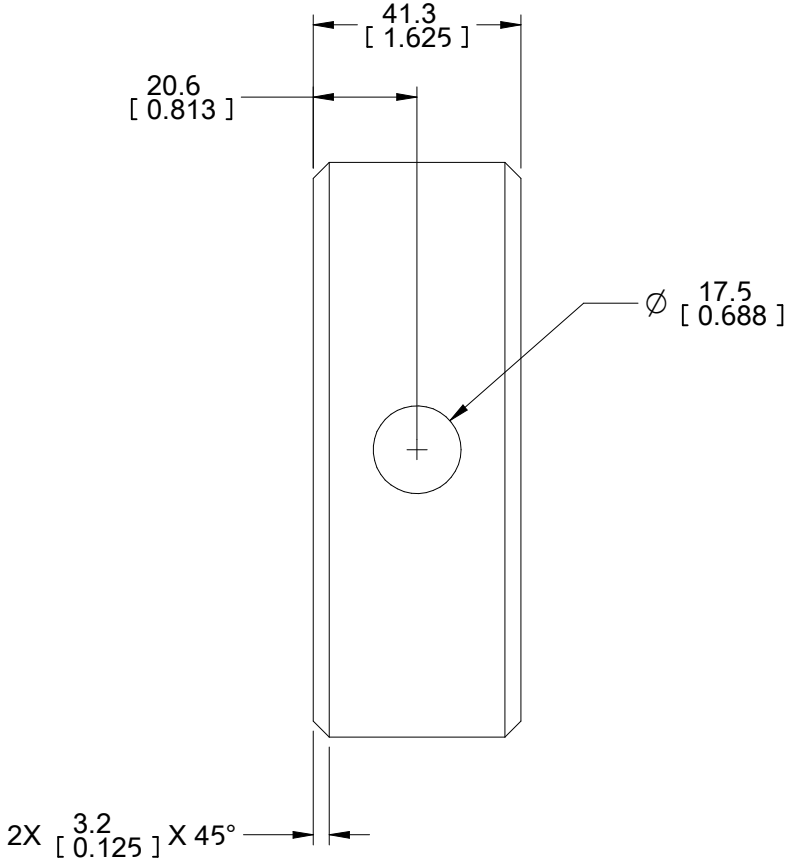

METRIC

A-ADD TO TEAMCENTER	01-46-119	RSCHWART RSCHWART 2024-06-25 1.34kg

SEE CASCADE ENGINEERING STANDARDS FOR DRAFTING CONVENTIONS. UNLESS OTHERWISE SPECIFIED ALL DIMENSIONS ARE IN MILLIMETERS. ALL POSITION TOLERANCES APPLY AT Ⓜ. ENVELOPE REQUIREMENT, Ⓔ, APPLIES.
--

cascade corporation

THIS DRAWING IS THE PROPERTY OF CASCADE AND CONTAINS CONFIDENTIAL INFORMATION. DO NOT REPRODUCE OR USE WITHOUT WRITTEN APPROVAL.
-

BOSS RETAINER

3.375 X 4.500 X 1.625

1 | 2168405 | R- 1

CASCADE CORPORATION ©

IMF

2226404 | R- 1

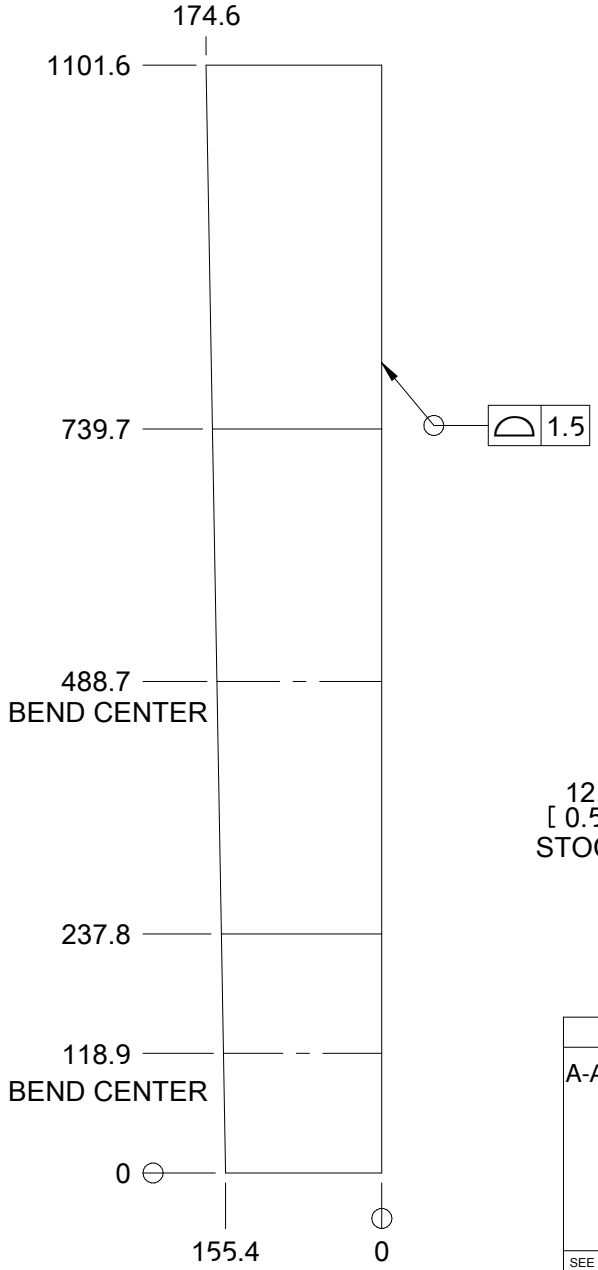

FLAT PATTERN

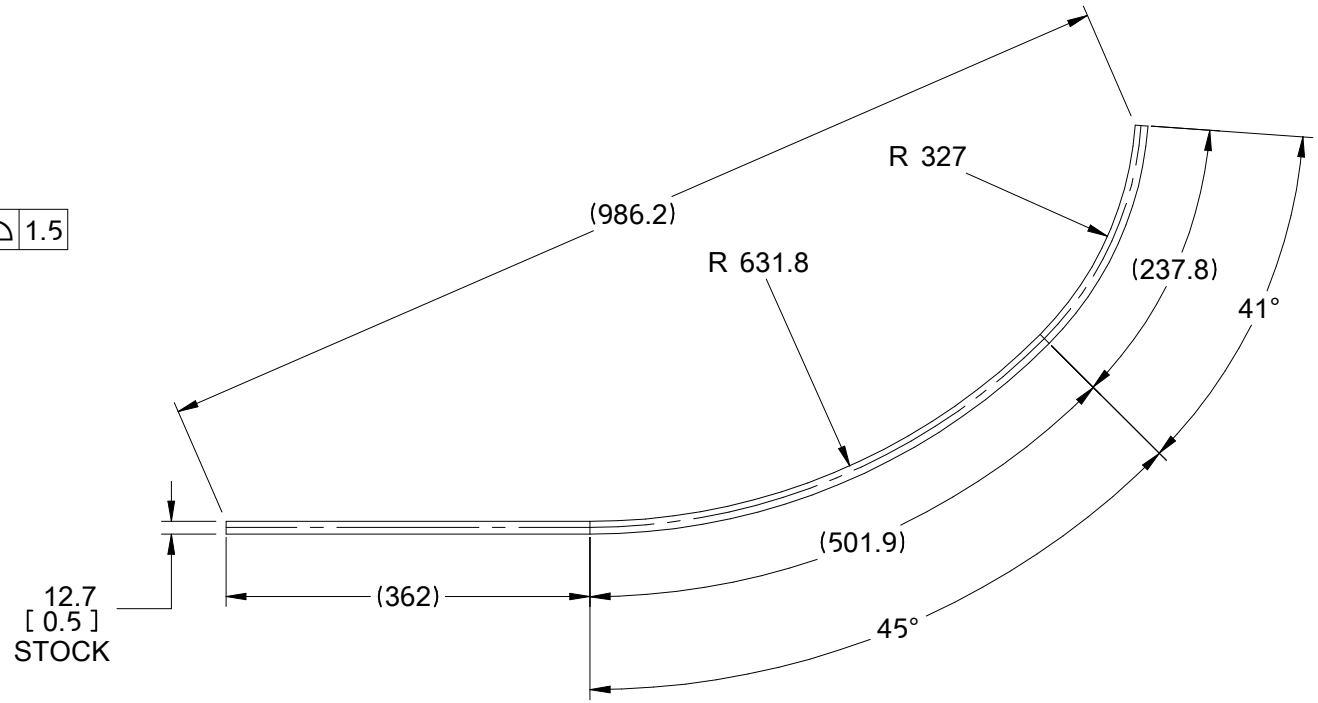

METRIC

A-ADD TO TEAMCENTER	02-01-133	RSCHWART RSCHWART 2024-06-24 18.0kg

SEE CASCADE ENGINEERING STANDARDS FOR DRAFTING CONVENTIONS. UNLESS OTHERWISE SPECIFIED ALL DIMENSIONS ARE IN MILLIMETERS. ALL POSITION TOLERANCES APPLY AT Ⓜ. ENVELOPE REQUIREMENT, Ⓔ, APPLIES.
--

cascade corporation

THIS DRAWING IS THE PROPERTY OF CASCADE AND CONTAINS CONFIDENTIAL INFORMATION. DO NOT REPRODUCE OR USE WITHOUT WRITTEN APPROVAL.
-

SKID PLATE, RH

CL3 0.50 AR400

1 | 2226404 | R- 1

CASCADE CORPORATION ©

IMF

2226403 | R- 1

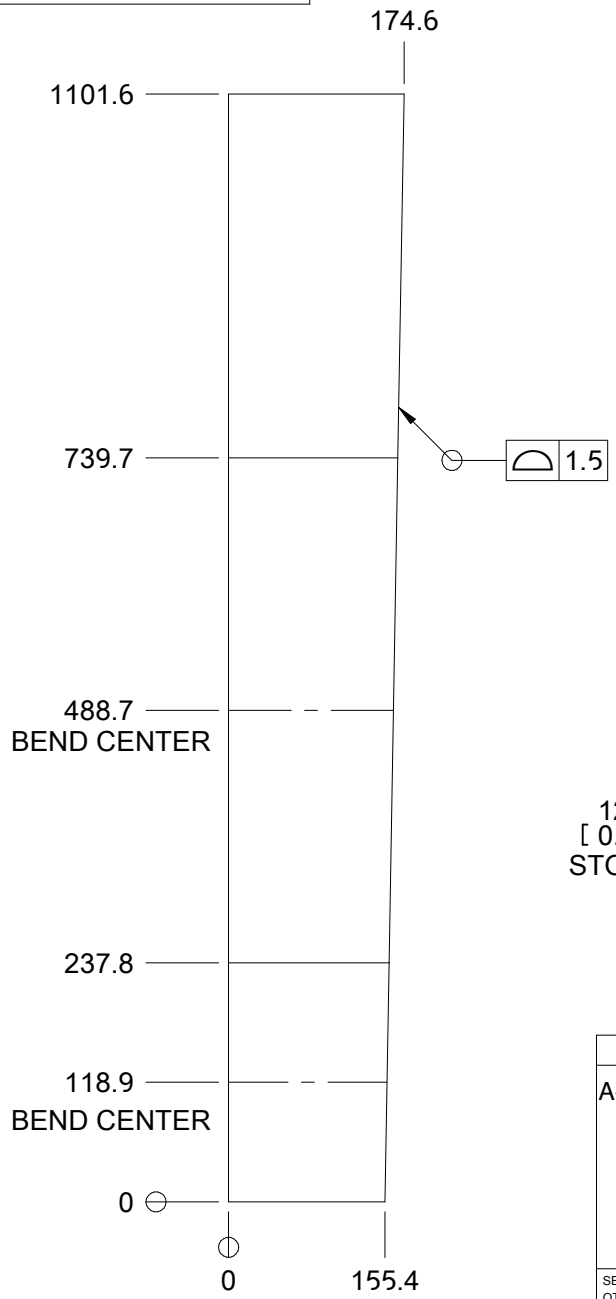

FLAT PATTERN

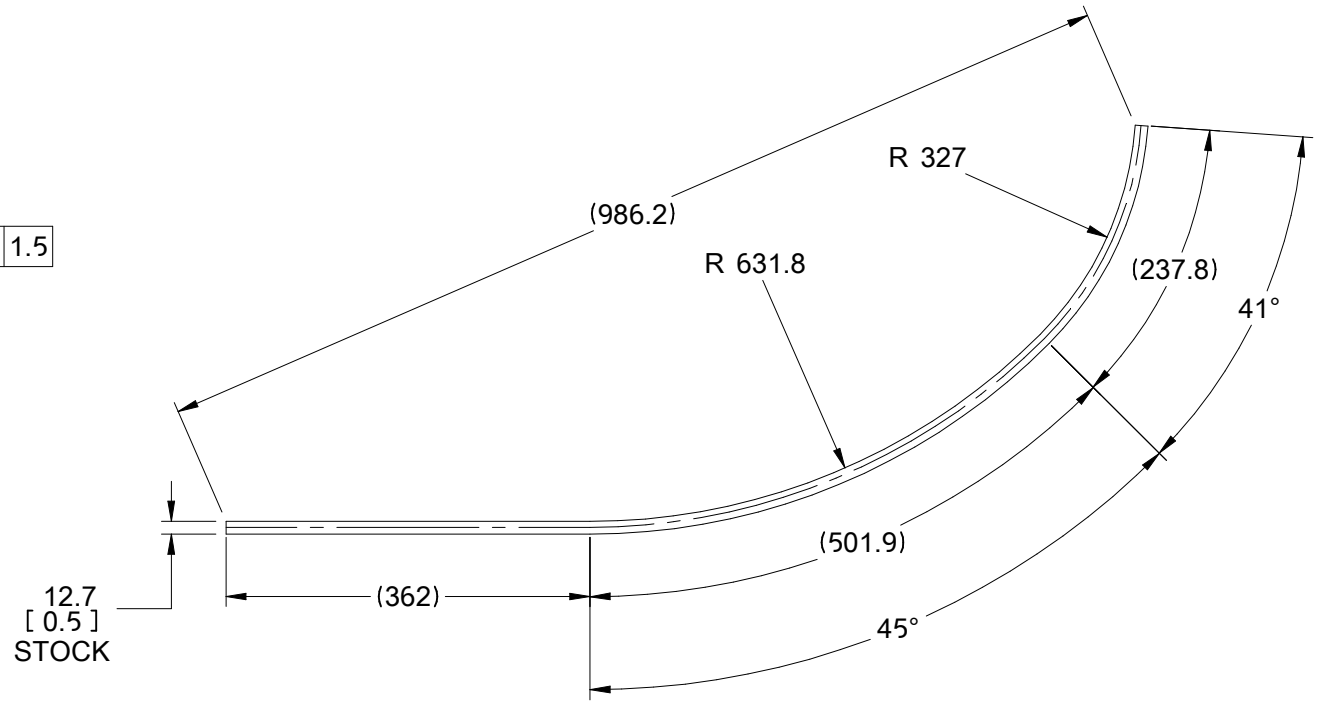

METRIC

A-ADD TO TEAMCENTER	02-01-133	RSCHWART RSCHWART 2024-06-24 18.0kg

SEE CASCADE ENGINEERING STANDARDS FOR DRAFTING CONVENTIONS. UNLESS OTHERWISE SPECIFIED ALL DIMENSIONS ARE IN MILLIMETERS. ALL POSITION TOLERANCES APPLY AT Ⓜ. ENVELOPE REQUIREMENT, Ⓔ, APPLIES.
--

cascade corporation

THIS DRAWING IS THE PROPERTY OF CASCADE AND CONTAINS CONFIDENTIAL INFORMATION. DO NOT REPRODUCE OR USE WITHOUT WRITTEN APPROVAL.

SKID PLATE, LH

CL3 0.50 AR400

1 | 2226403 | R- 1

CASCADE CORPORATION ©

IMF

2240063 | R- 1

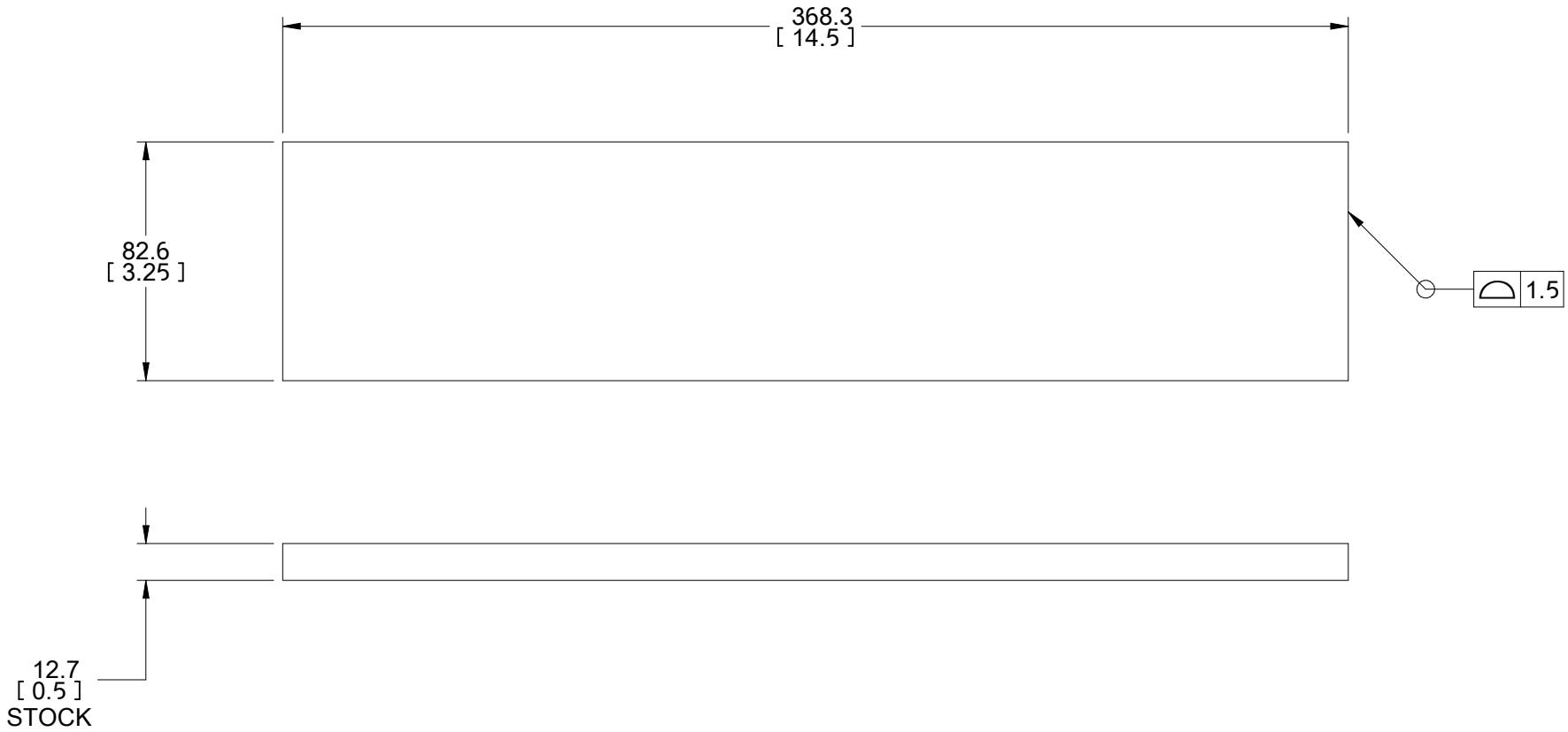

METRIC

A-ADD TO TEAMCENTER	02-01-133	RSCHWART RSCHWART 2024-06-24 3.02kg

SEE CASCADE ENGINEERING STANDARDS FOR DRAFTING CONVENTIONS. UNLESS OTHERWISE SPECIFIED ALL DIMENSIONS ARE IN MILLIMETERS. ALL POSITION TOLERANCES APPLY AT Ⓜ. ENVELOPE REQUIREMENT, Ⓔ, APPLIES.
--

cascade corporation

THIS DRAWING IS THE PROPERTY OF CASCADE AND CONTAINS CONFIDENTIAL INFORMATION. DO NOT REPRODUCE OR USE WITHOUT WRITTEN APPROVAL.
-

WEAR BAR

0.50 X 3.250 X 14.50 AR400

1 | 2240063 | R- 1

CASCADE CORPORATION ©

IMF 2253177.1/0

2240059 | R- 1

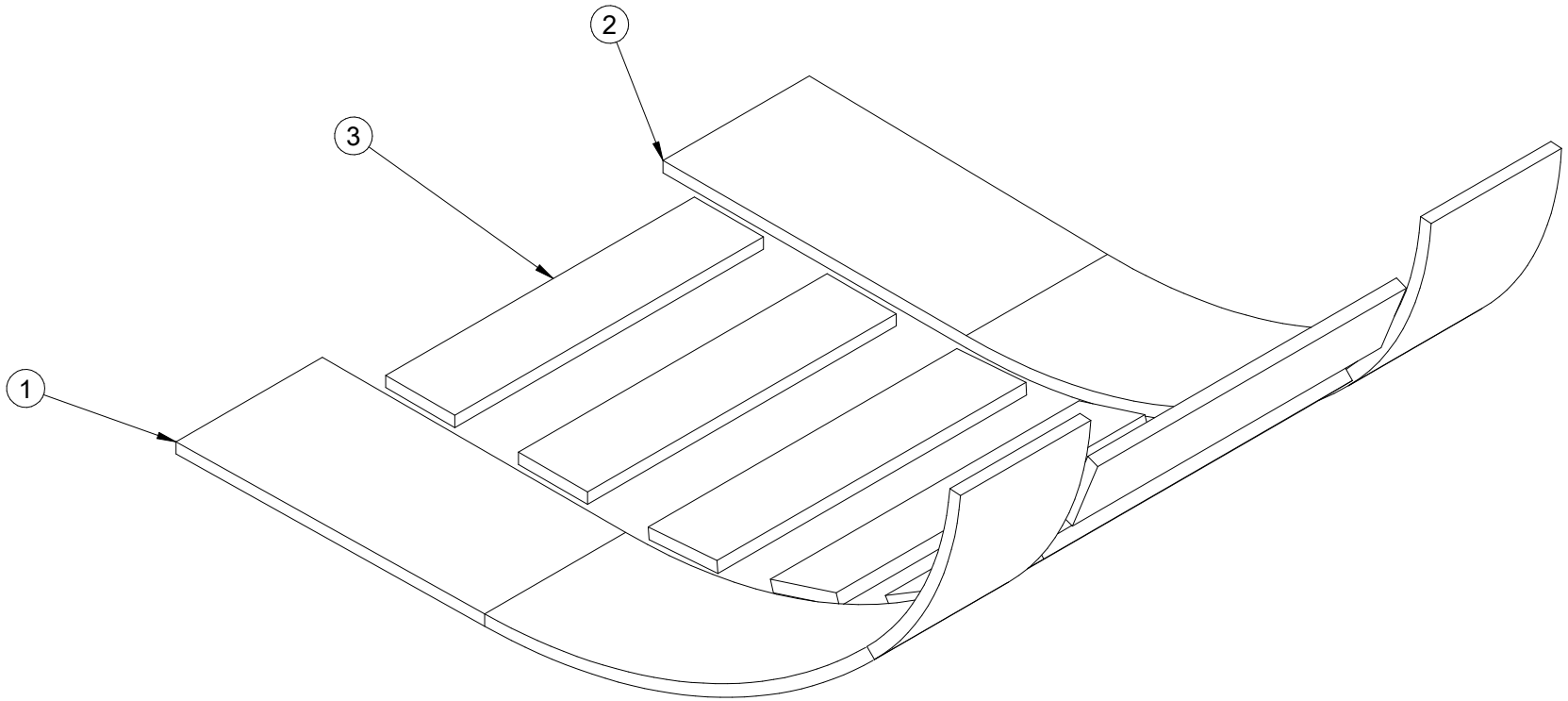

SEE SK-28100 FOR WELD INSTRUCTION

METRIC

o	o-o	PN	-----
1	1	2226404	SKID PLATE, RH
2	1	2226403	SKID PLATE, LH
3	7	2240063	WEAR BAR

A-ADD TO TEAMCENTER

LISTED

RSCHWART

RSCHWART

2024-06-25

57.3kg

SEE CASCADE ENGINEERING STANDARDS FOR DRAFTING CONVENTIONS. UNLESS OTHERWISE SPECIFIED ALL DIMENSIONS ARE IN MILLIMETERS. ALL POSITION TOLERANCES APPLY AT Ⓜ. ENVELOPE REQUIREMENT, Ⓔ, APPLIES.
--

cascade corporation

THIS DRAWING IS THE PROPERTY OF CASCADE AND CONTAINS CONFIDENTIAL INFORMATION. DO NOT REPRODUCE OR USE WITHOUT WRITTEN APPROVAL.
-

WEAR OPTION

CL3 30" BKT, AR400

1 | 2240059 | R- 1

CASCADE CORPORATION ©

IMF

2166954 | R- 1

NOTES:
1) NO HEAT TREAT
2) ALL DIMENSIONS ± 0.25 MM

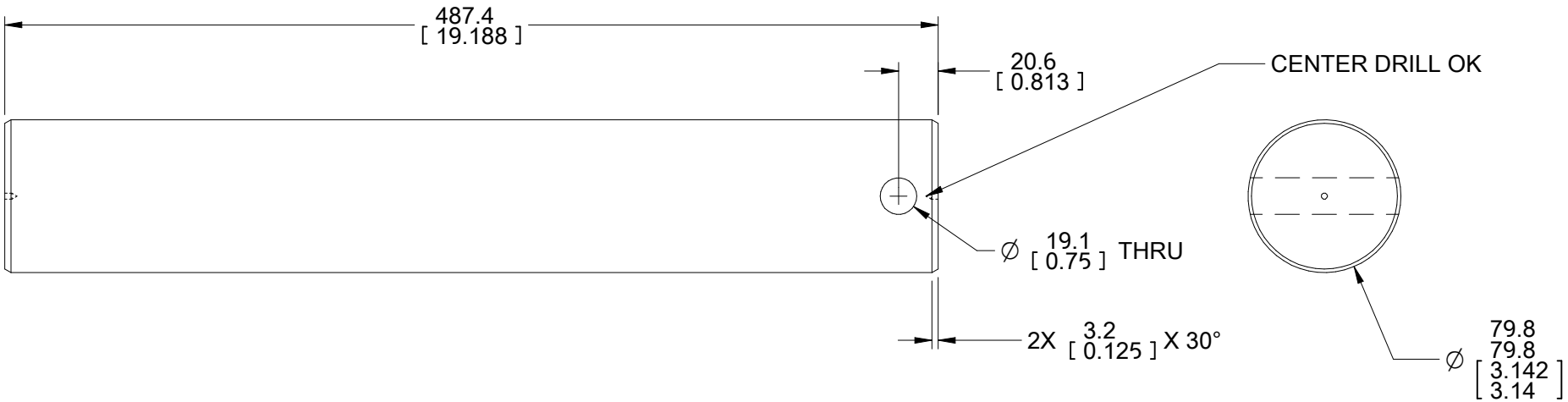

METRIC

A-ADD TO TEAMCENTER	02-18-03	RSCHWART RSCHWART
		2024-06-26
		18.9kg

SEE CASCADE ENGINEERING STANDARDS FOR DRAFTING CONVENTIONS. UNLESS OTHERWISE SPECIFIED ALL DIMENSIONS ARE IN MILLIMETERS. ALL POSITION TOLERANCES APPLY AT Ⓜ. ENVELOPE REQUIREMENT, Ⓔ, APPLIES.
--

cascade corporation

THIS DRAWING IS THE PROPERTY OF CASCADE AND CONTAINS CONFIDENTIAL INFORMATION. DO NOT REPRODUCE OR USE WITHOUT WRITTEN APPROVAL.
-

PIN - CD

DS DX225/DX235 3.142 X 19.188

1 | 2166954 | R- 1

CASCADE CORPORATION ©