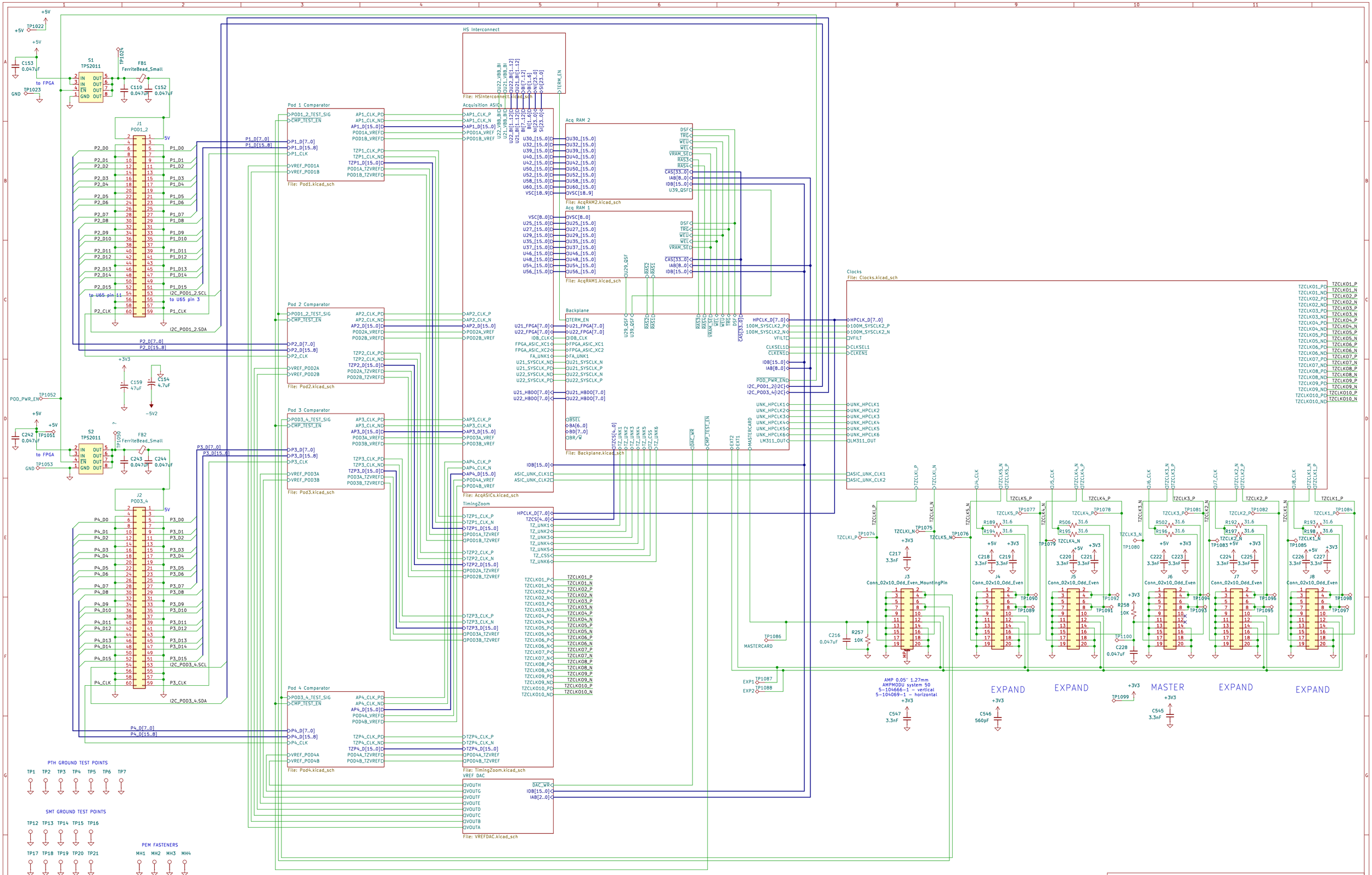

Sheet: /
File: hp16717.kicad_sch

Title:

Size: A2	Date:	Rev:
KiCad E.D.A. 9.0.1		Id: 1/13

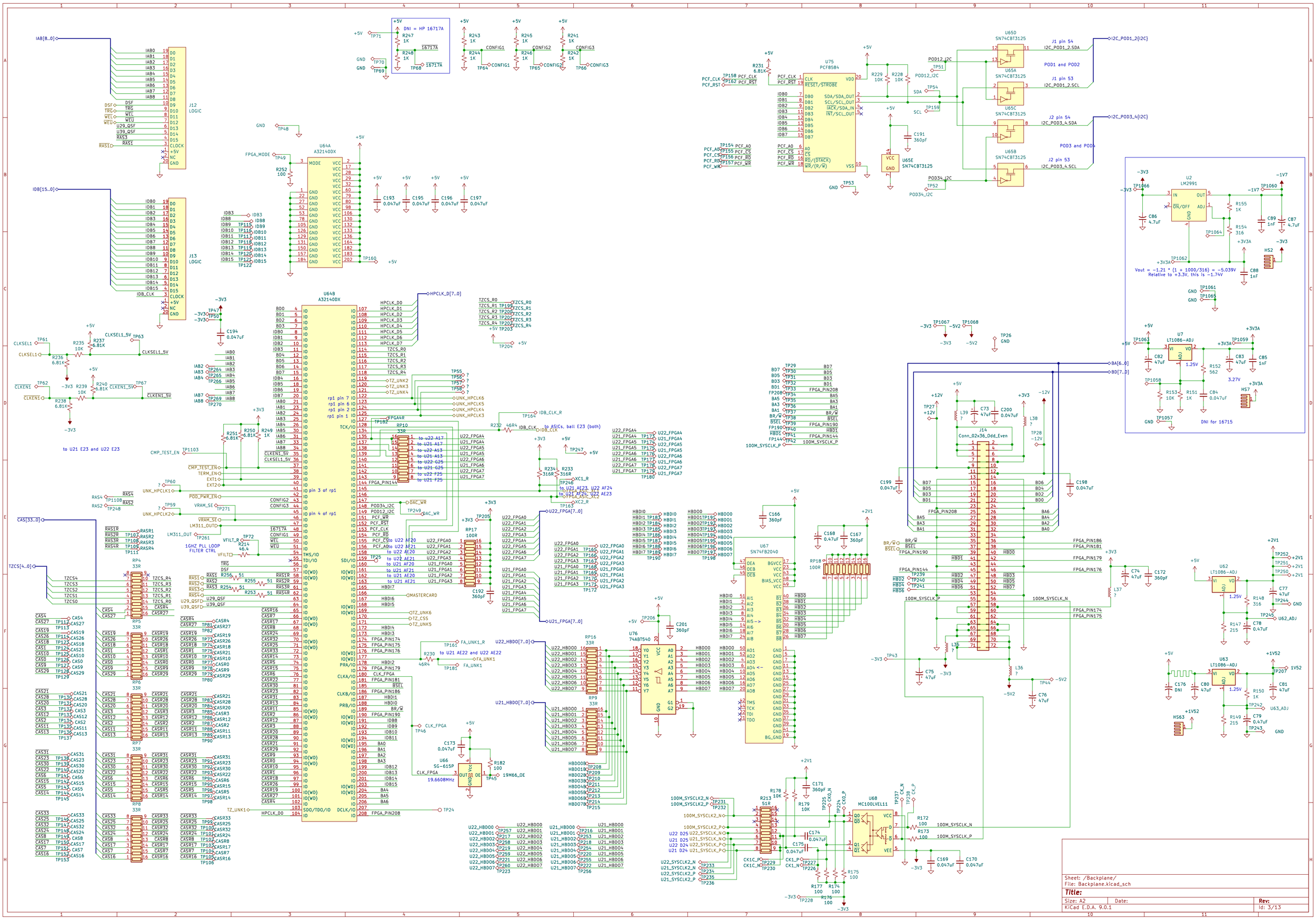

Sheet: /Backplane/
File: Backplane.kicad_sch

Title:

Size: A2	Date:	Rev:
KiCad E.D.A. 9.0.1		Id: 3/13

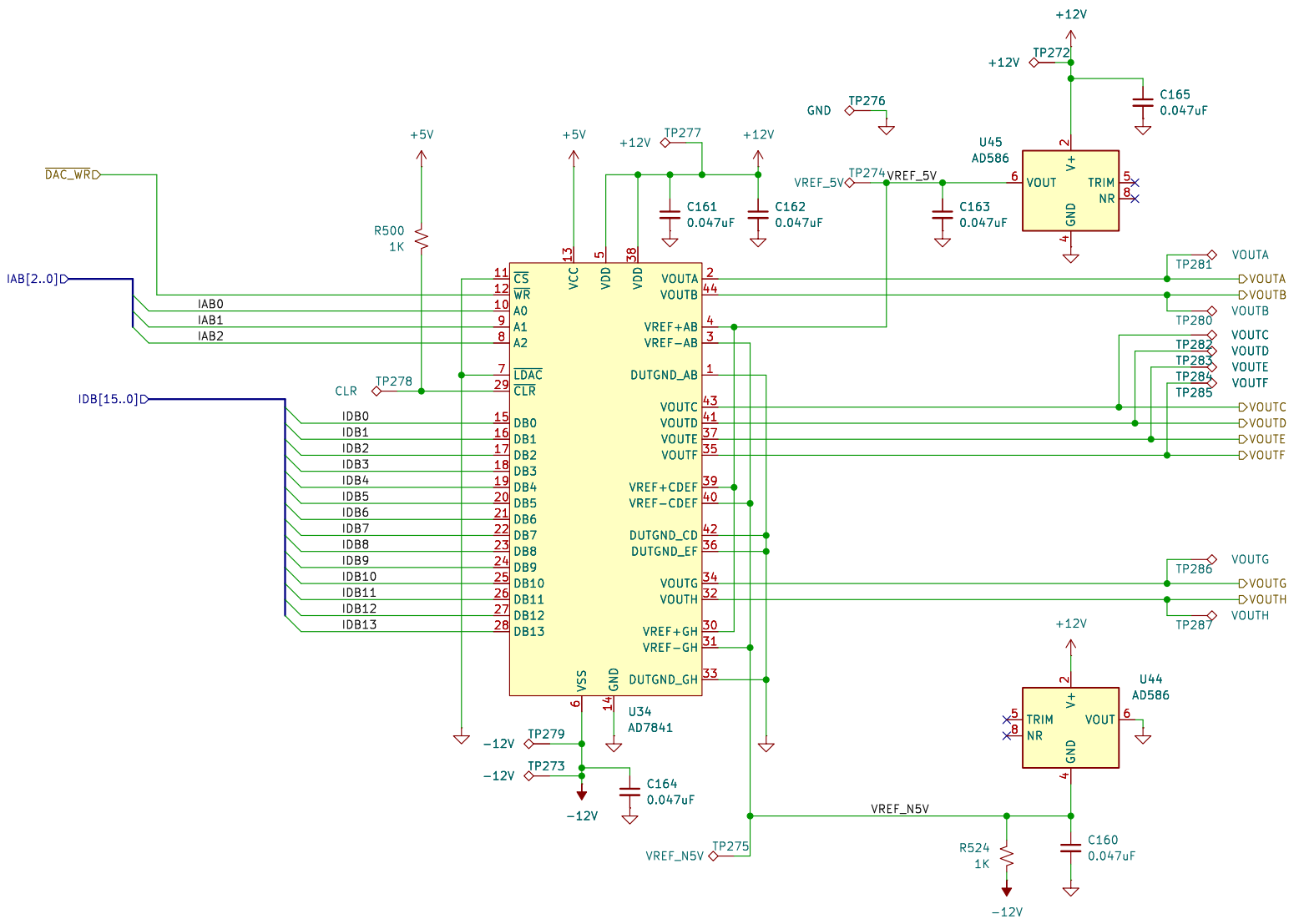

Sheet: /VREF DAC/
File: VREFDAC.kicad_sch

Title:

Size: A4	Date:	**Rev:**
KiCad E.D.A. 9.0.1		Id: 4/13

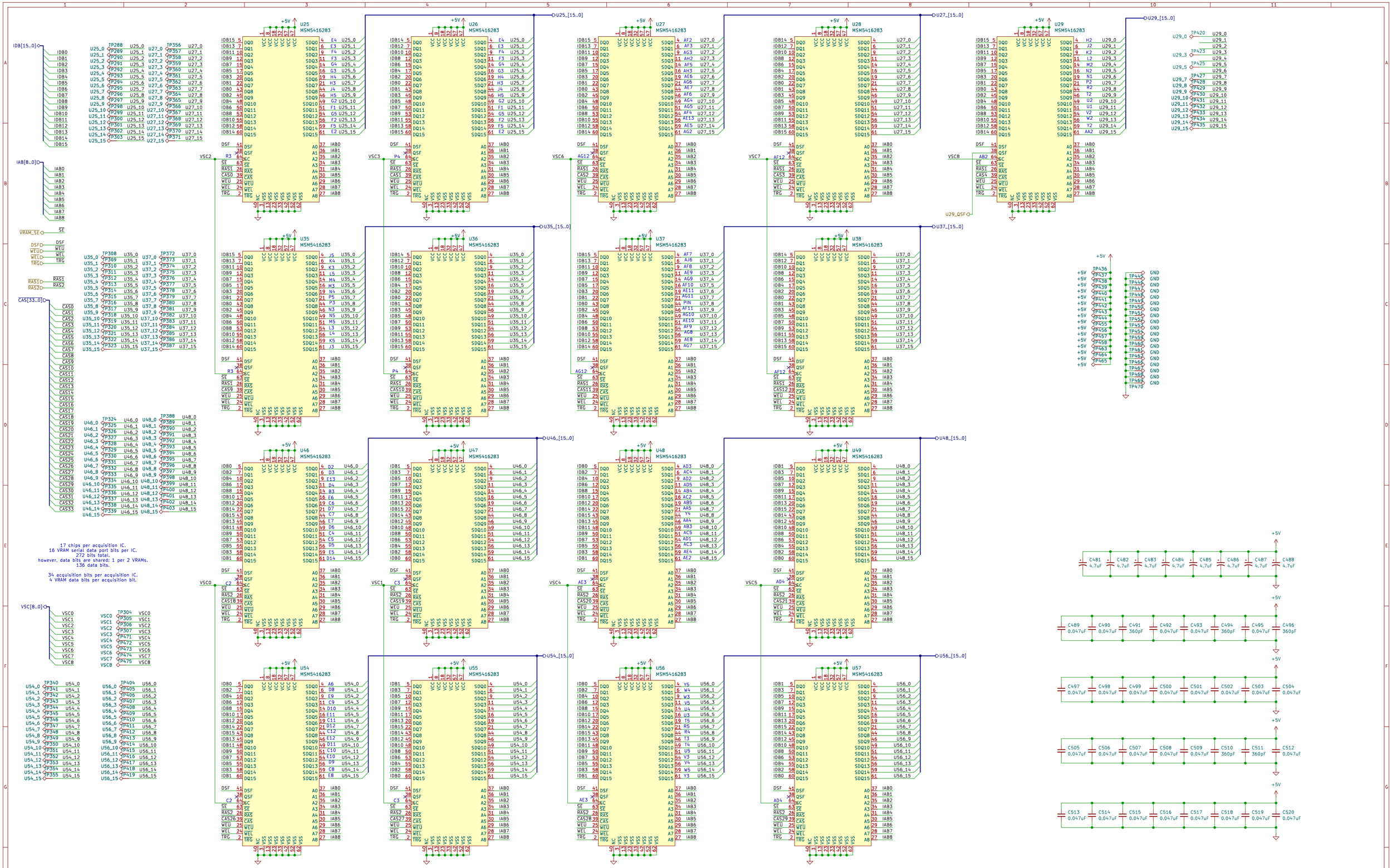

Sheet: /Acq RAM 1/
File: AcqRAM1.kicad_sch

Title:

Size: A2 | Date: | Rev:

KiCad E.D.A. 9.0.1 | Id: 5/13

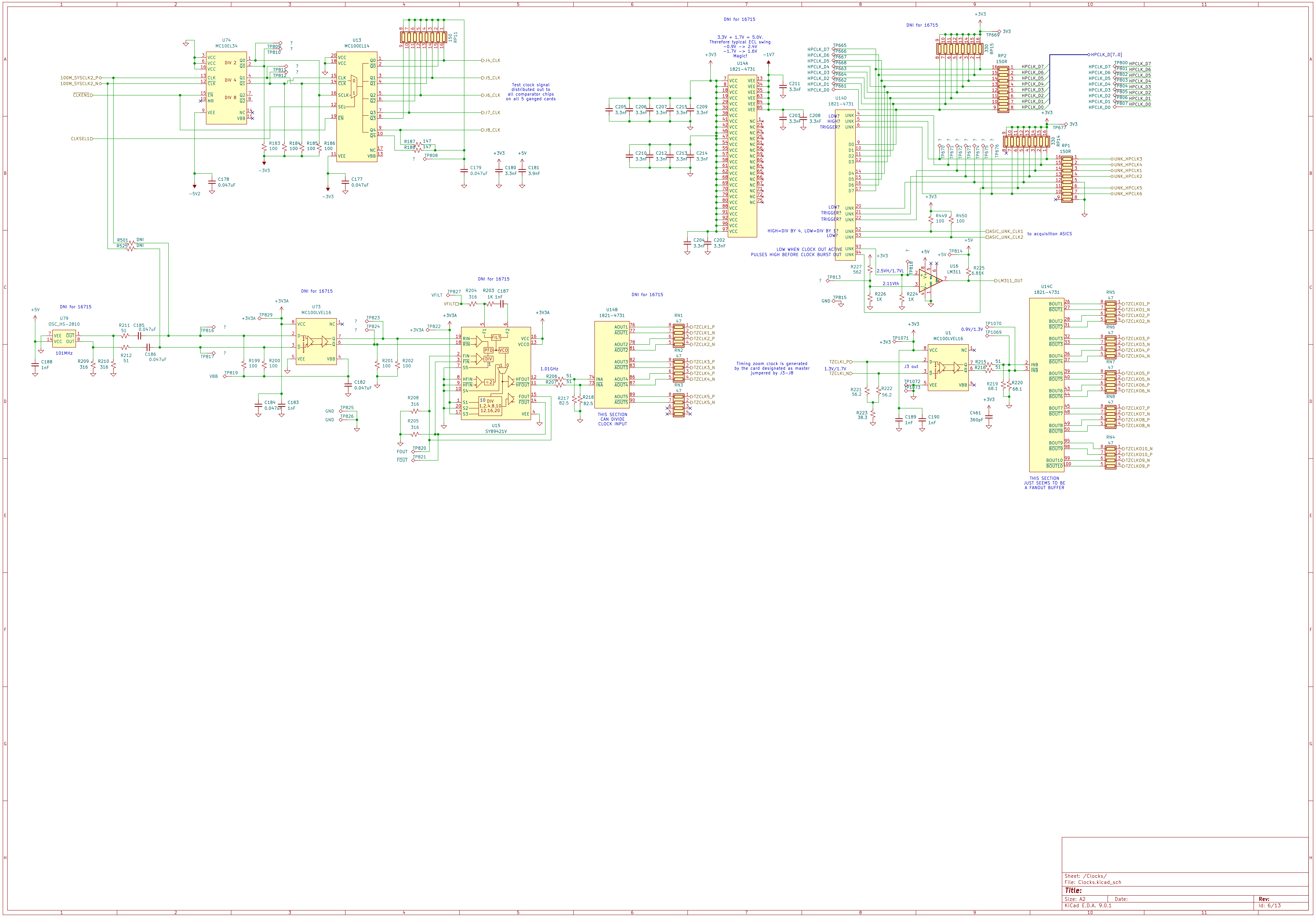
DNI for 16715
3.3V + 1.7V = 5.0V.
Therefore typical ECL swing
-0.9V -> 2.4V
-1.7V -> 1.6V
Magic!
Test clock signal
distributed out to
all comparator chips
on all 5 ganged cards
HIGH=DIV BY 4, LOW=DIV BY 1?
LOW WHEN CLOCK OUT ACTIVE
PULSES HIGH BEFORE CLOCK BURST OUT
to acquisition ASICS
THIS SECTION
CAN DIVIDE
CLOCK INPUT
Timing zoom clock is generated
by the card designated as master
jumpered by J3-J8
THIS SECTION
JUST SEEMS TO BE
A FANOUT BUFFER
U74 MC10EL34
U13 MC100EL14
U14A 1821-4731
U14B 1821-4731
U14C 1821-4731
U14D 1821-4731
U73 MC100LVEL16
U15 SY89421V
U16 LM311
U1 MC100LVEL16
U79 OSC_HS-2810
101MHz
1.01GHz
Sheet: /Clocks/
File: Clocks.kicad_sch
Title:
Size: A2
Date:
Rev:
KiCad E.D.A. 9.0.1
Id: 6/13

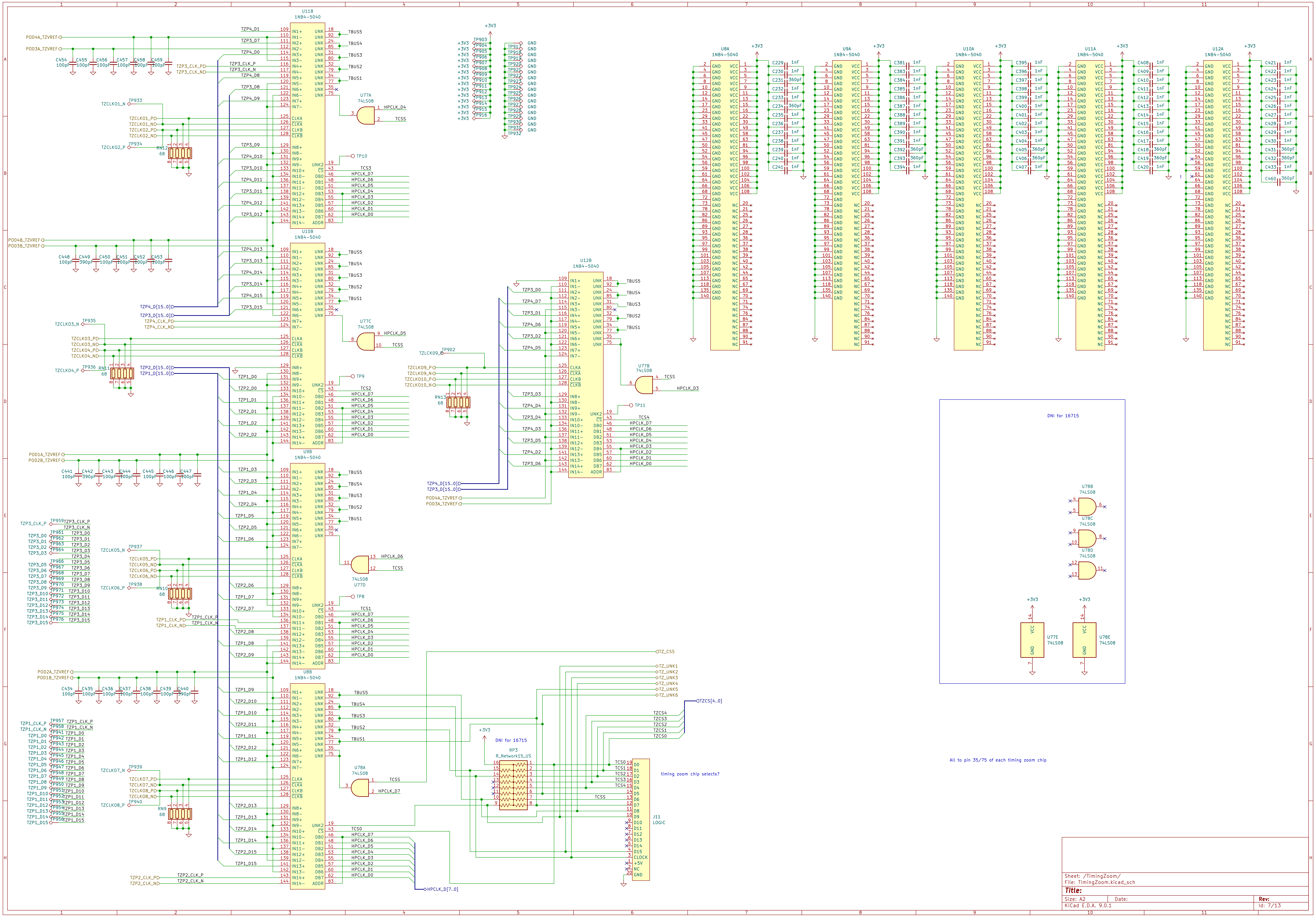
U11B
1N84-5040
U10B
1N84-5040
U9B
1N84-5040
U8B
1N84-5040
U12B
1N84-5040
U8A
1N84-5040
U9A
1N84-5040
U10A
1N84-5040
U11A
1N84-5040
U12A
1N84-5040
U77A
74LS08
U77B
74LS08
U77C
74LS08
U78A
74LS08
U78B
74LS08
U78C
74LS08
U78D
74LS08
U77E
74LS08
U78E
74LS08
DNI for 16715
DNI for 16715
RP3
R_Network15_US
J11
LOGIC
timing zoom chip selects?
All to pin 35/75 of each timing zoom chip
HPCLK_D[7..0]
TZCS[4..0]
TZ_CSS
TZ_UNK1
TZ_UNK2
TZ_UNK3
TZ_UNK4
TZ_UNK5
TZ_UNK6
TZP4_D[15..0]
TZP3_D[15..0]
TZP2_D[15..0]
TZP1_D[15..0]
POD4A_TZVREF
POD3A_TZVREF
POD4B_TZVREF
POD3B_TZVREF
POD1A_TZVREF
POD2B_TZVREF
POD2A_TZVREF
POD1B_TZVREF
+3V3
Sheet: /TimingZoom/
File: TimingZoom.kicad_sch
Title:
Size: A2
Date:
Rev:
KiCad E.D.A. 9.0.1
Id: 7/13

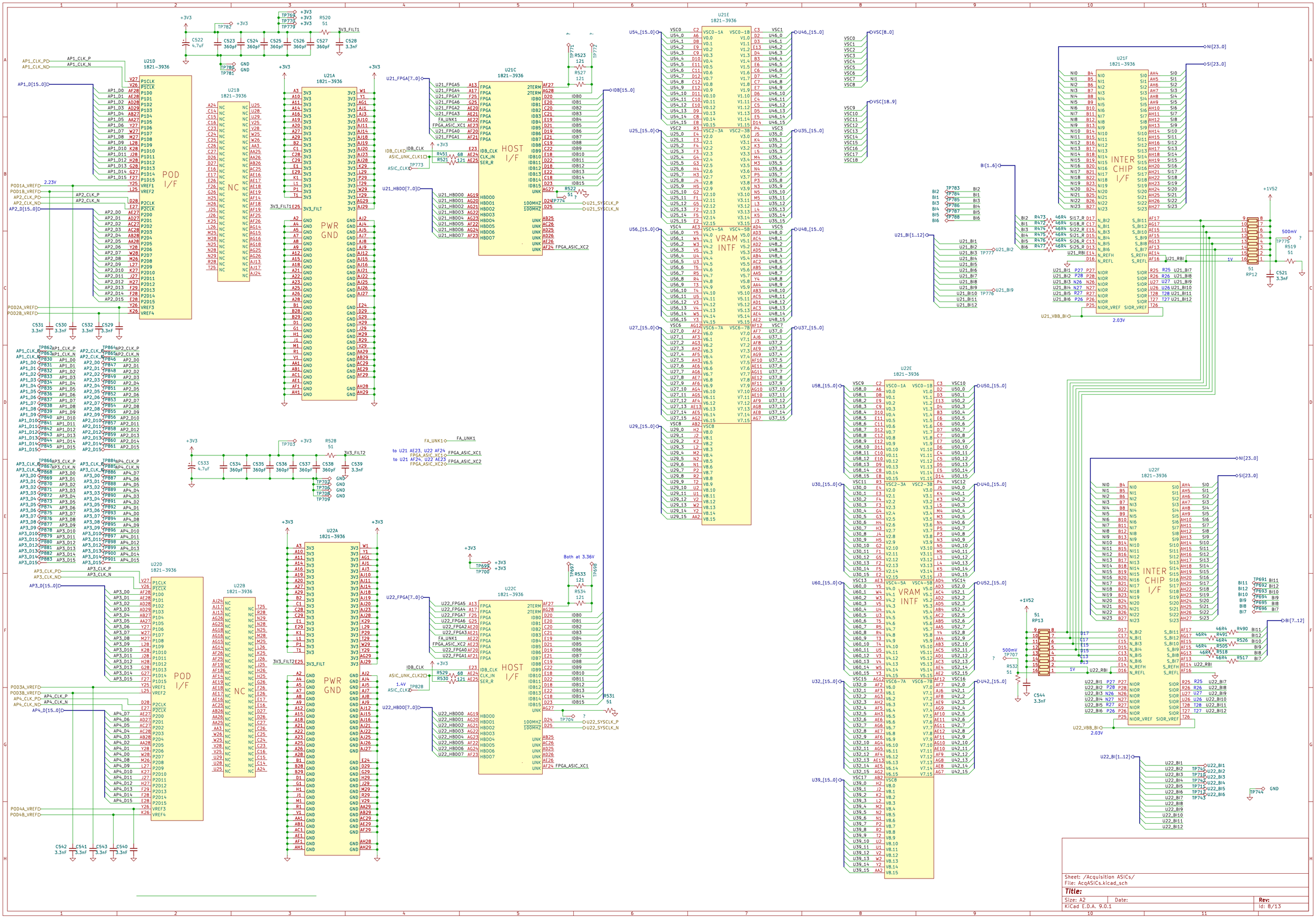

U21D 1821-3936
POD I/F
U21B 1821-3936
NC
U21A 1821-3936
PWR GND
U21C 1821-3936
HOST I/F
U21E 1821-3936
VRAM INTF
U21F 1821-3936
INTER CHIP I/F
U22E 1821-3936
U22F 1821-3936
U22D 1821-3936
U22B 1821-3936
U22A 1821-3936
U22C 1821-3936
Both at 3.36V
Sheet: /Acquisition ASICs/
File: AcqASICs.kicad_sch
Title:
Size: A2
Date:
Rev:
KiCad E.D.A. 9.0.1
Id: 8/13

POD 1

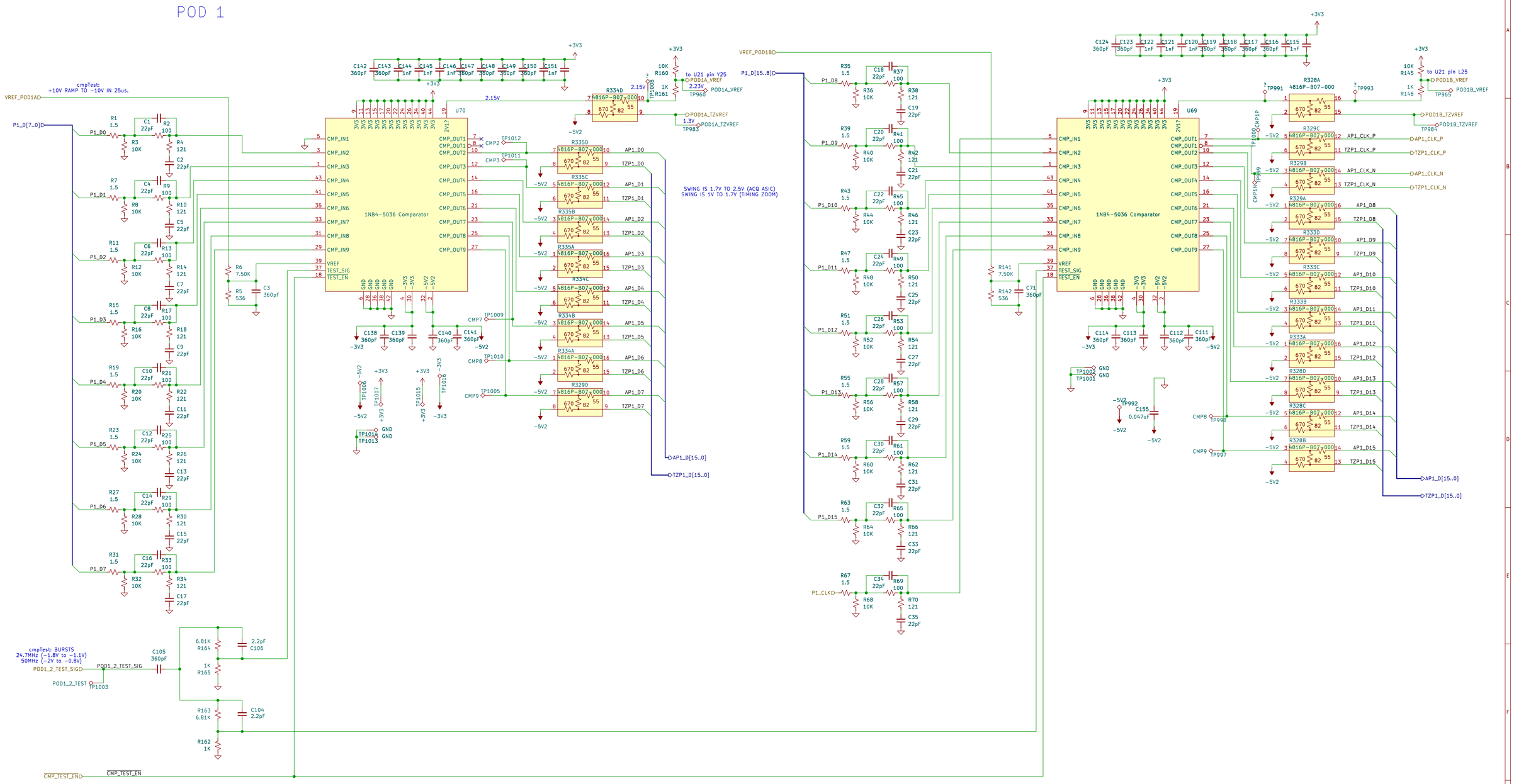

Sheet: /Pod 1 Comparator/
File: Pod1.kicad_sch

Title:

Size: A2	Date:	Rev:
KiCad E.D.A. 9.0.1		Id: 9/13

POD 2

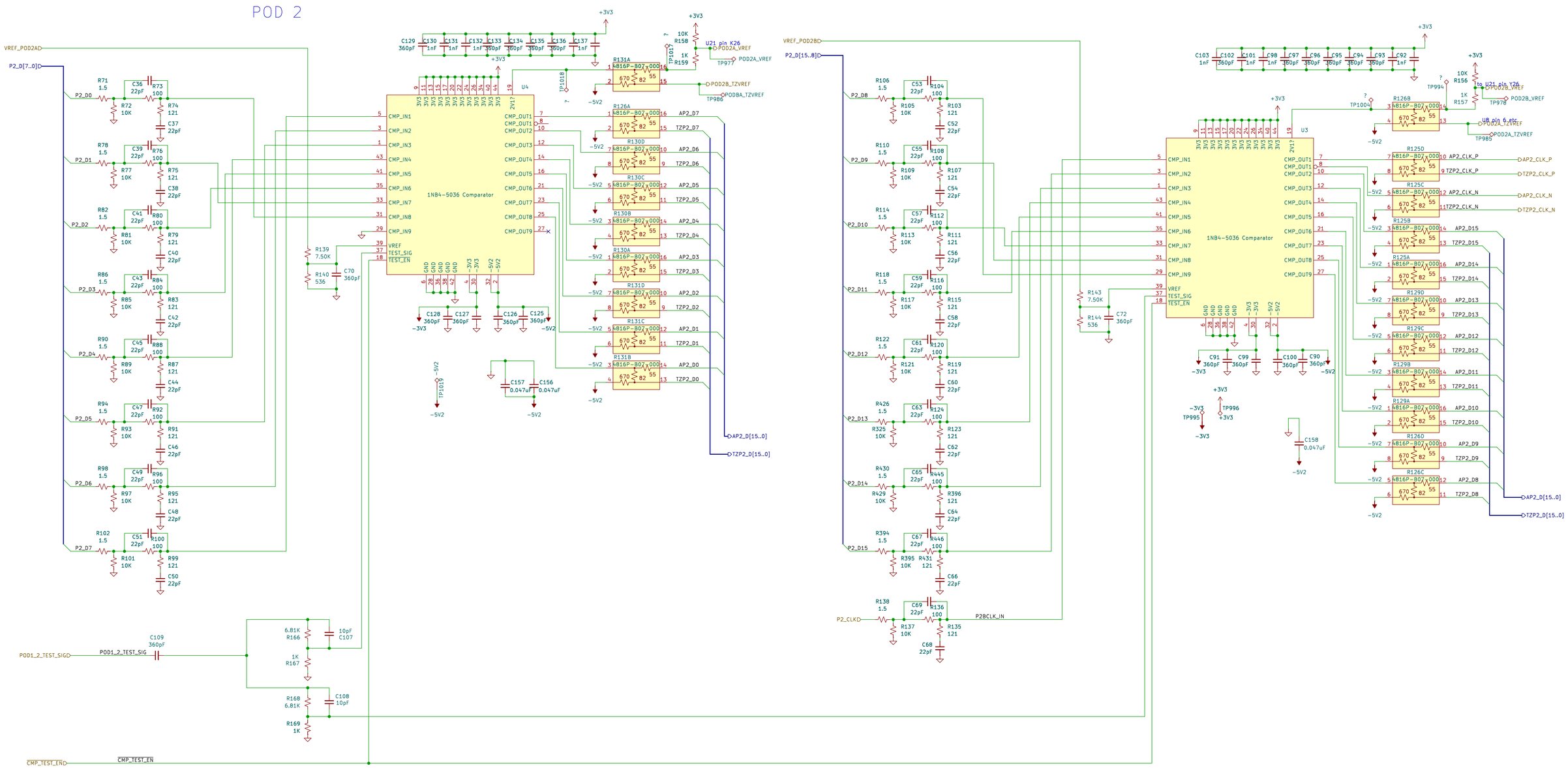

Sheet: /Pod 2 Comparator/
File: Pod2.kicad_sch

Title:

Size: A2	Date:	Rev:
KiCad E.D.A. 9.0.1		Id: 10/13

POD 3

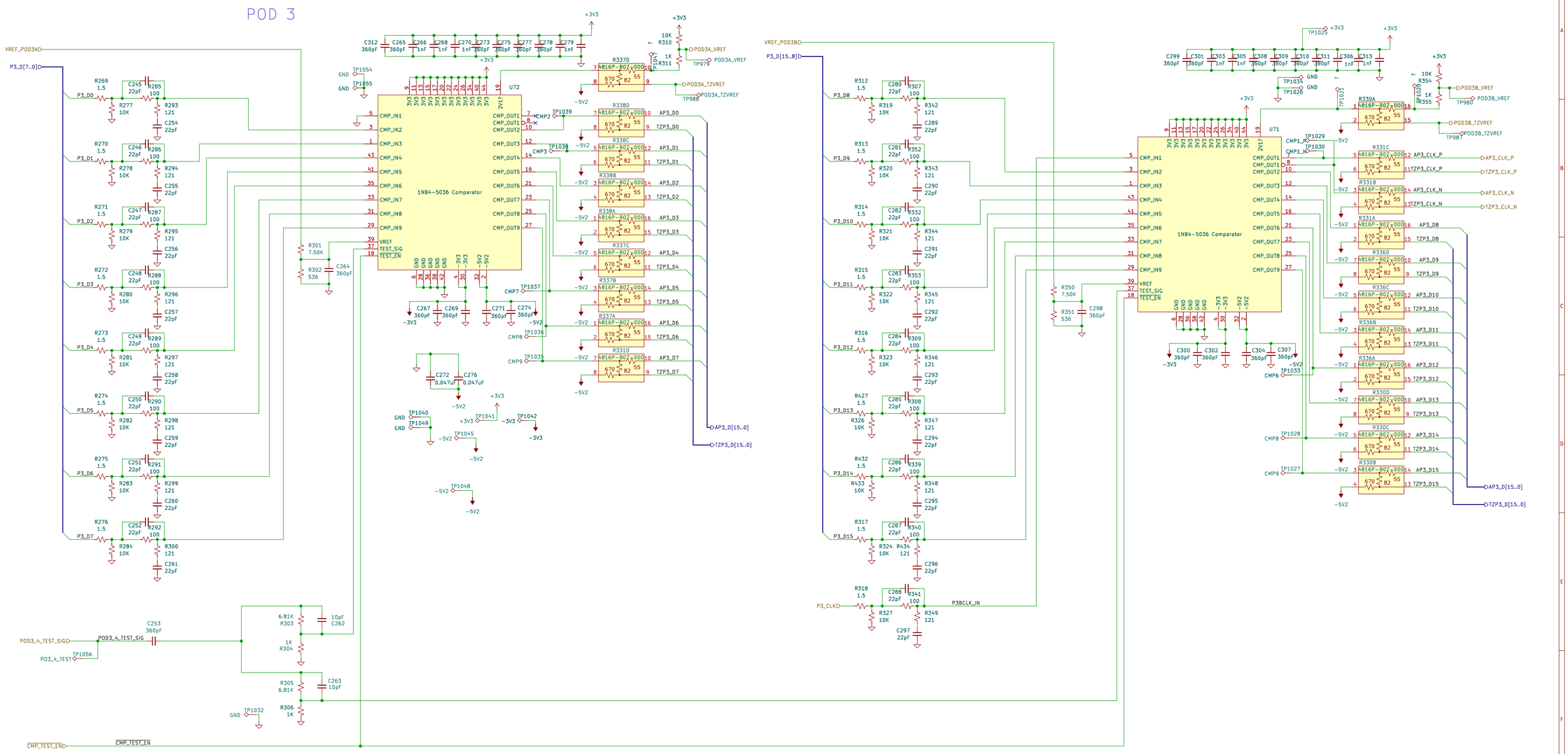

Sheet: /Pod 3 Comparator/
File: Pod3.kicad_sch

Title:

Size: A2	Date:	Rev:
KiCad E.D.A. 9.0.1		Id: 10/13

POD 4

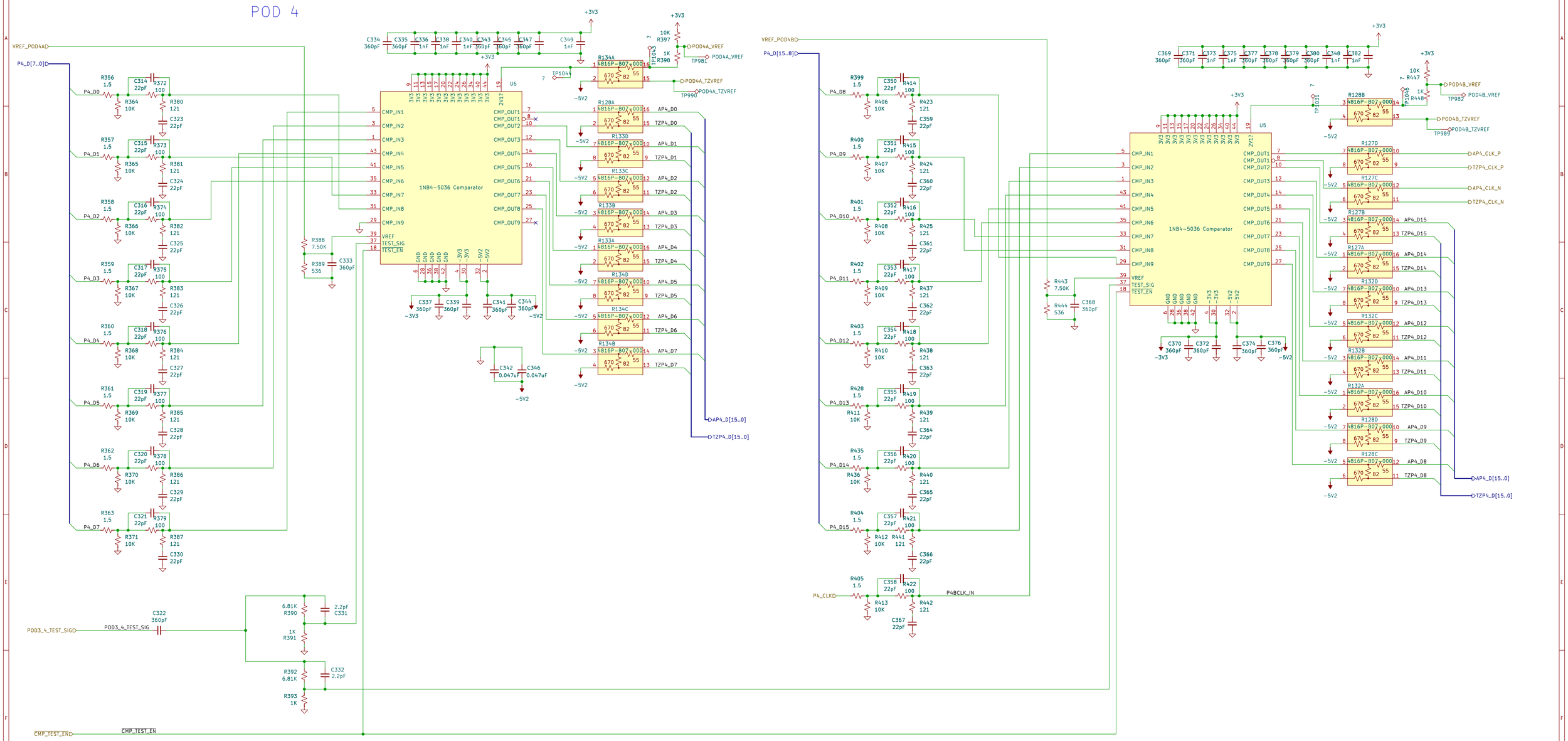

Sheet: /Pod 4 Comparator/	
File: Pod4.kicad_sch	
Title:	
Size: A2	Date:	**Rev:**
KiCad E.D.A. 9.0.1	Id: 11/13

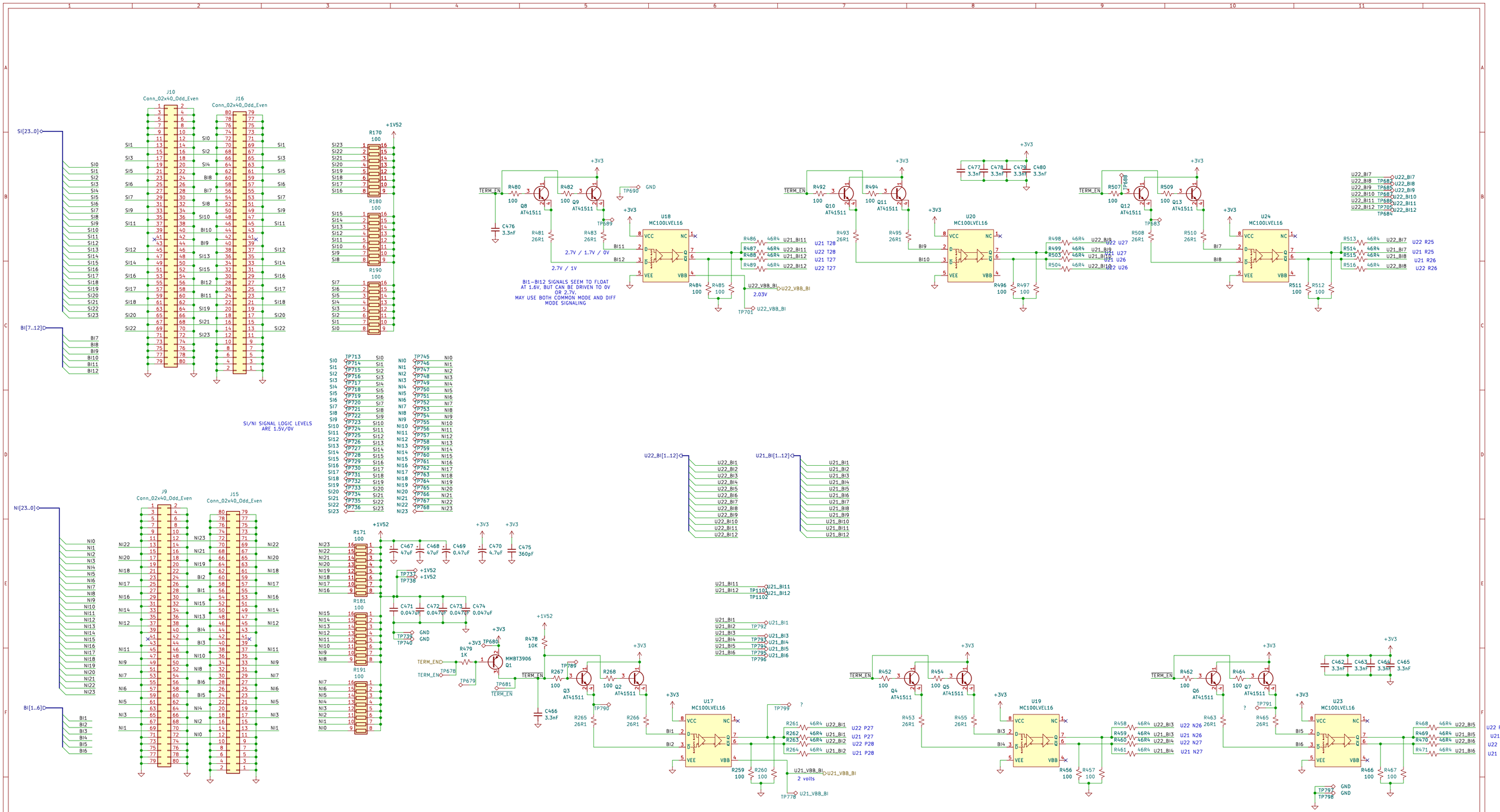

Sheet: /HS Interconnect/
File: HSInterconnect.kicad_sch

Title:

Size: A2	Date:	Rev:
KiCad E.D.A. 9.0.1		Id: 12/13

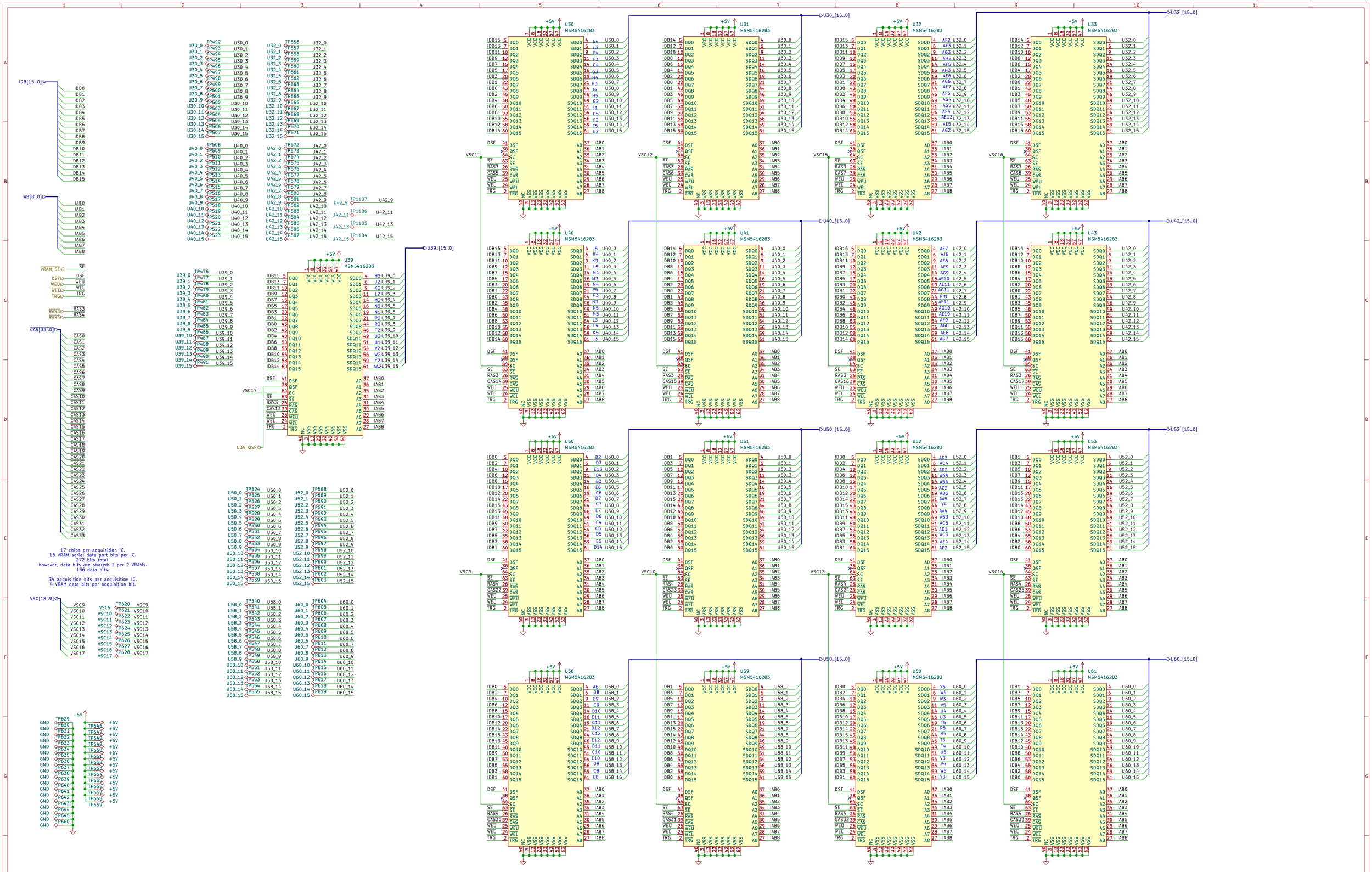

Sheet: /Acq RAM 2/
File: AcqRAM2.kicad_sch

Title:

Size: A2	Date:	Rev:
KiCad E.D.A. 9.0.1		Id: 13/13