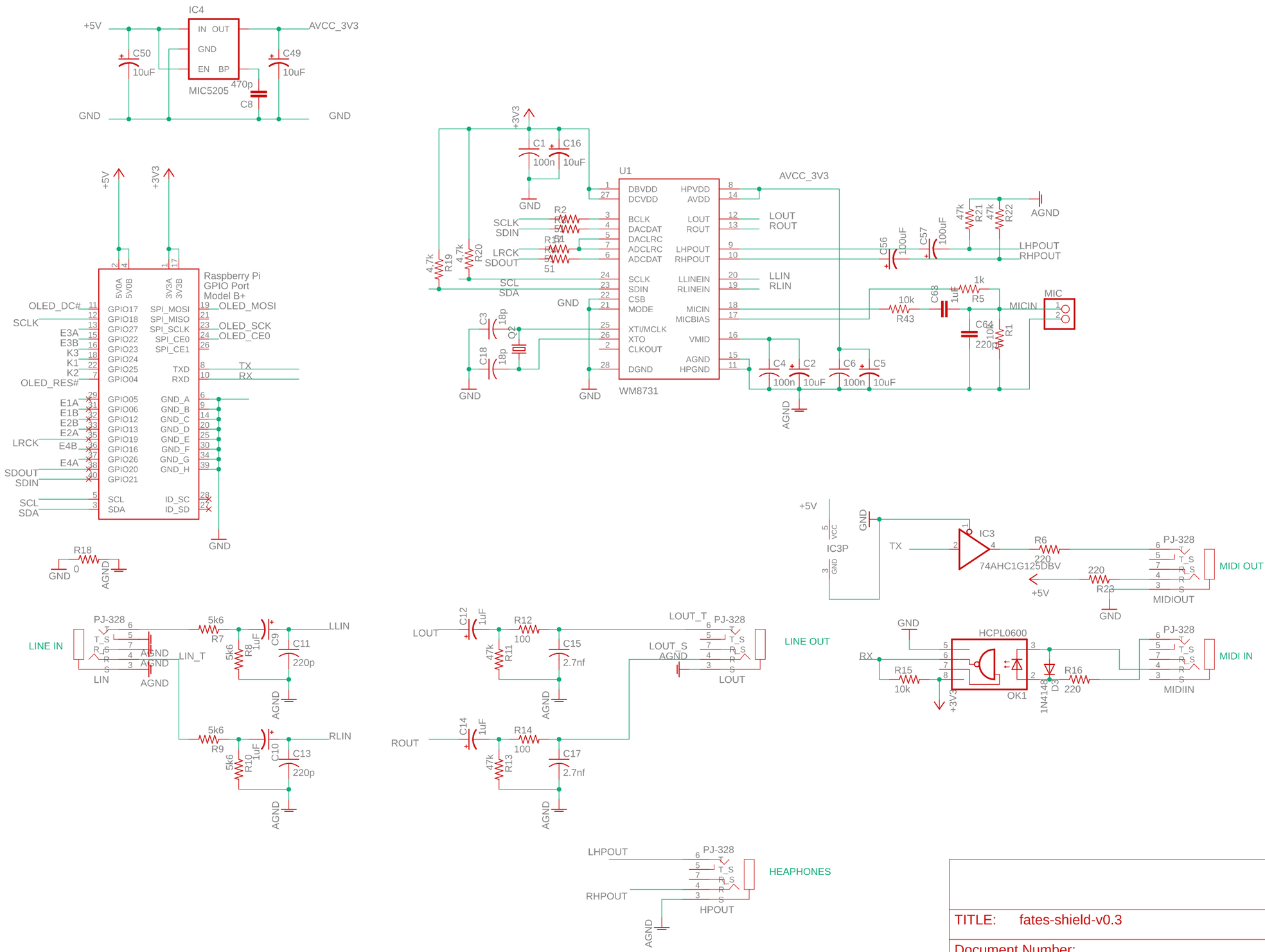

TITLE: fates-shield-v0.3	
Document Number:	REV:
Date: 05/11/2024 10:31	Sheet: 1/2