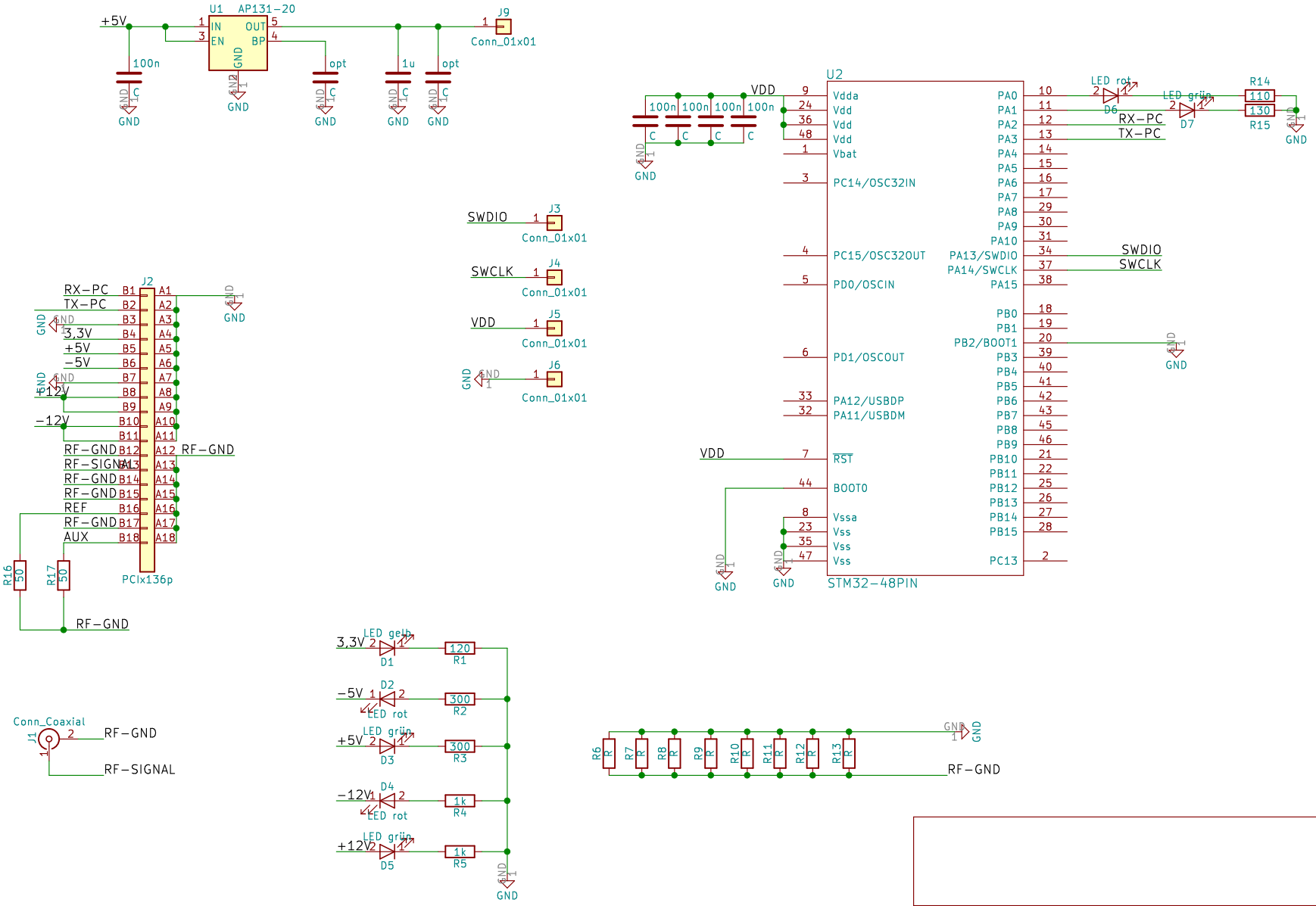

Sheet: /
File: rflego_termination.sch

Title: rf-module:termination

Size: A4	Date: 2018-05-25	Rev:
KiCad E.D.A. eeschema 4.0.7		Id: 1/1