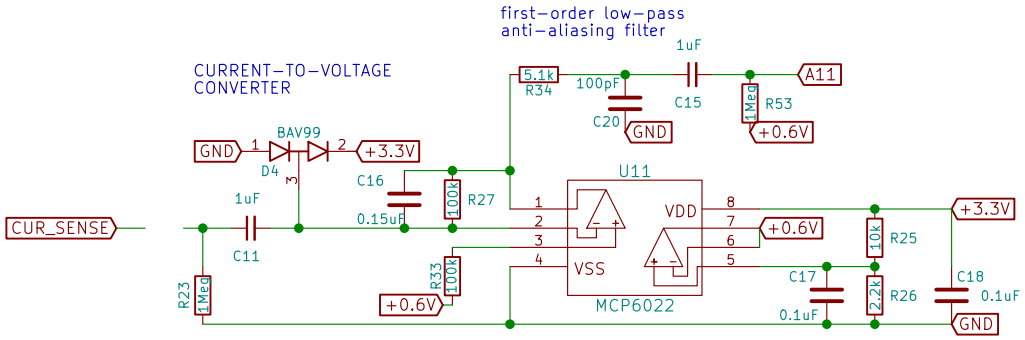

Sci-Bots Inc.

Sheet: /feedback/
File: feedback.sch

Title: DropBot control board

Size: USLetter	Date: 2017-05-17	**Rev: 3.5**
KiCad E.D.A. kicad 4.0.6		Id: 5/7