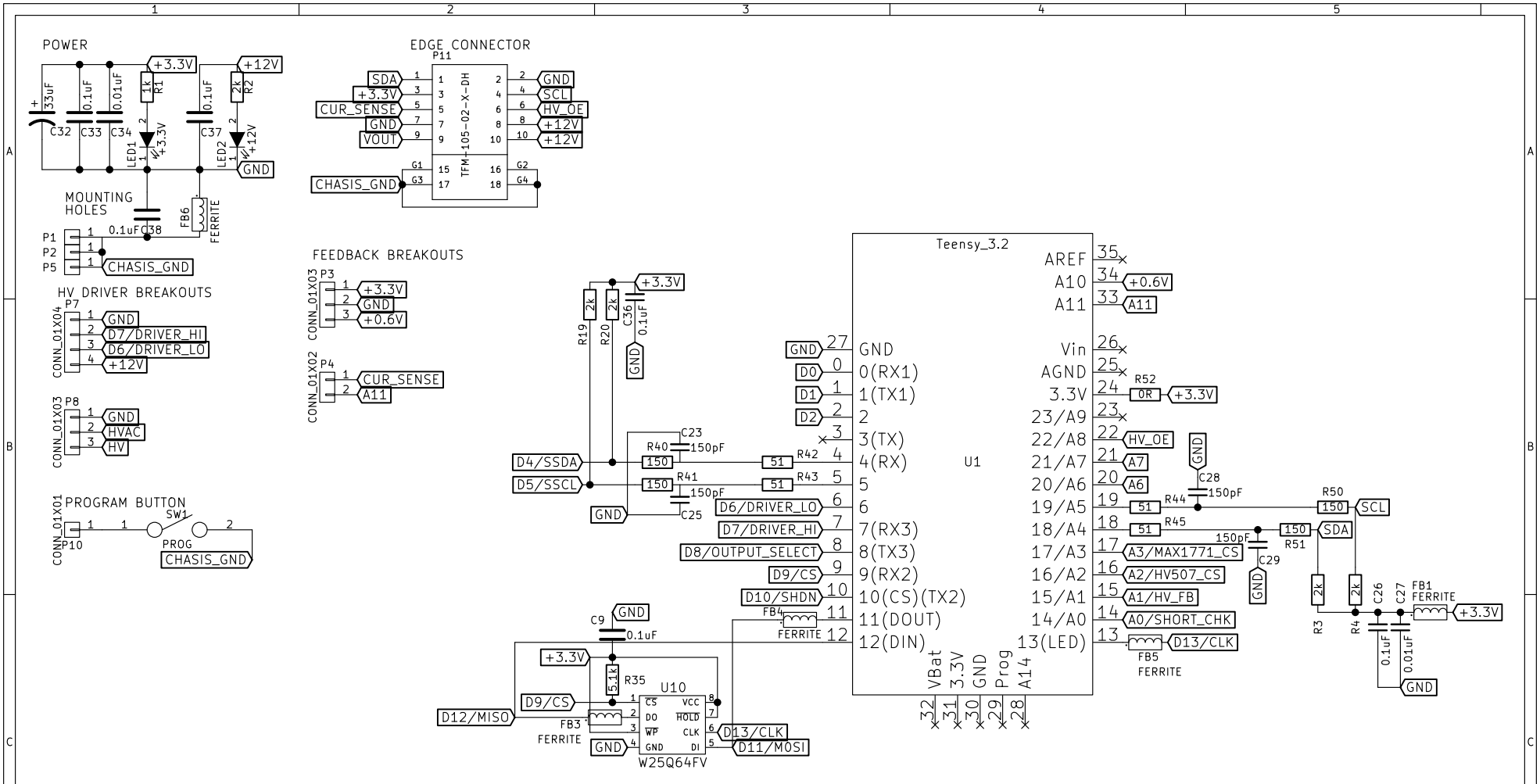

USB pass-through

usb-pass-through.sch

On-board calibration

on-board-calibration.sch

boost-converter

boost-converter.sch

HV square wave driver

hv-square-wave-driver.sch

feedback

feedback.sch

output-select

output-select.sch

Sci-Bots Inc.

Sheet: /

File: dropbot_control_board.sch

Title: DropBot control board

Size: USLetter	Date: 2017-05-17	**Rev: 3.5**
KiCad E.D.A. kicad 4.0.1-stable		Id: 1/7