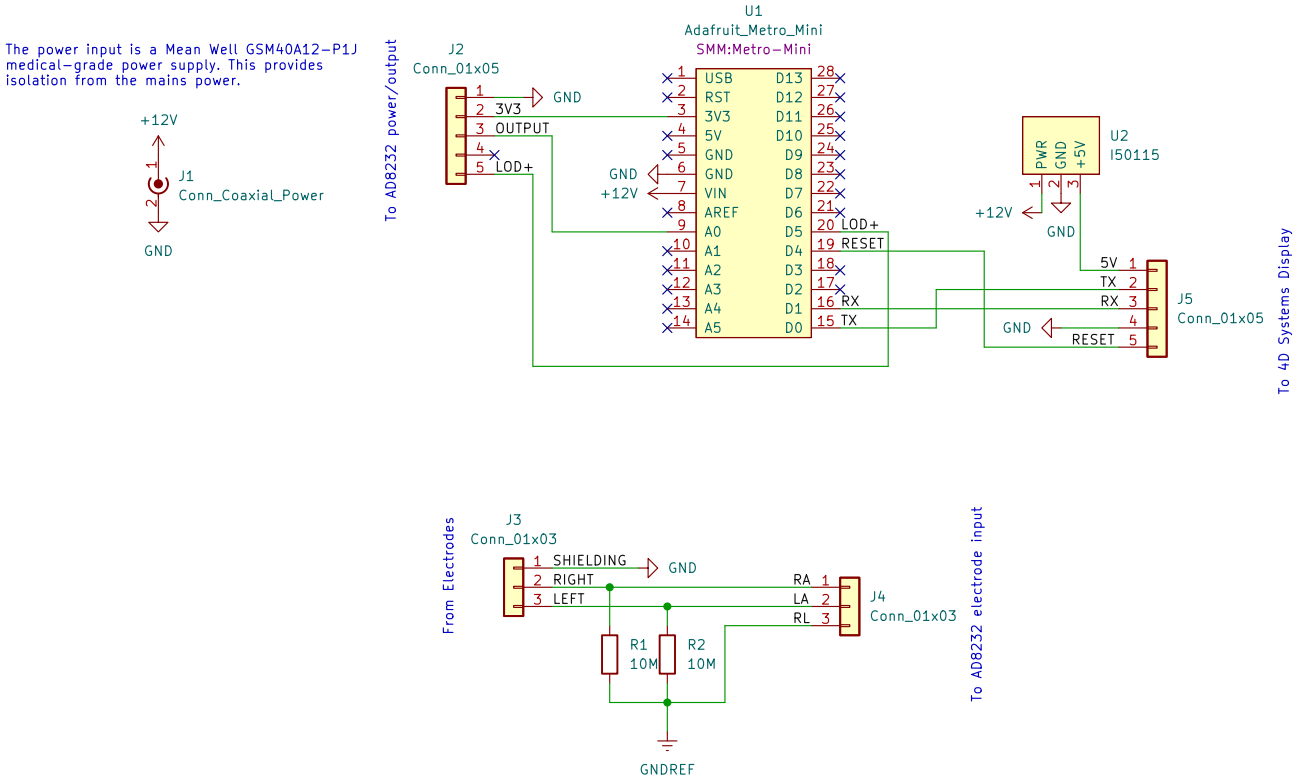

Author: Kate Swanson
Science Museum of Minnesota
Sheet: /
File: electricity-in-the-body.kicad_sch

Title: Electricity In the Body

Size: A4	Date: 2022-07-28	**Rev: 0**
KiCad E.D.A. kicad 6.0.5		Id: 1/1