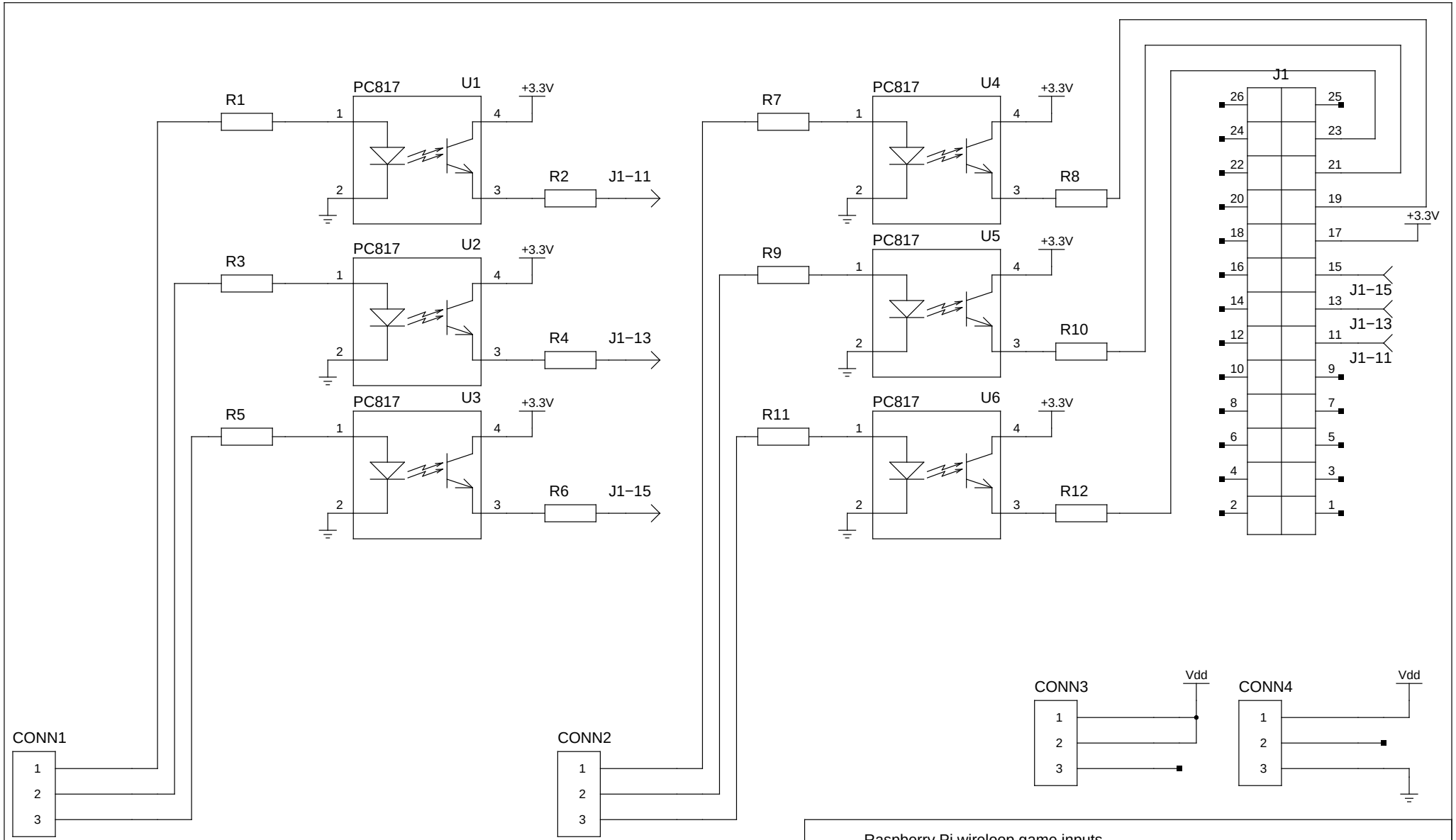

	Raspberry Pi wireloop game inputs		
TITLE	https://github.com/scolytus/draht		
FILE:	draht.sch	REVISION:	v0.1 2014_09_07
PAGE	1 OF 1	DRAWN BY:	Michael Gissing