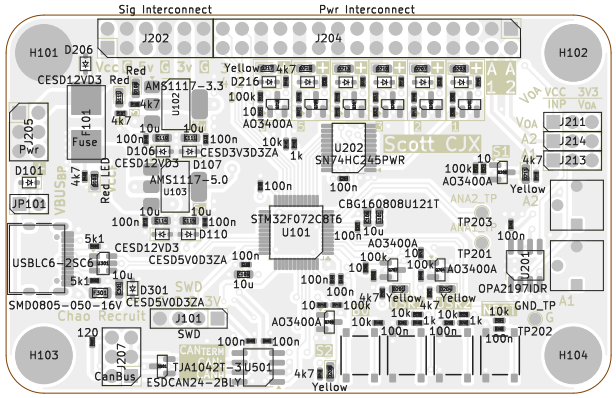

https://github.com/scott-cjx/Chao-Recruit
Licensed to Nanyang Venture Formula for NVF-2
Copyright © Scott CJX
License: CERN-OHL-S-2.0

Scott CJX

Sheet: Light Colors Placement TOP
File: Chao Recruit.kicad_pcb

Title: Chao Recruit

Size: A4	Date: 2024-09-29	**Rev: 1**
KiCad E.D.A. 8.0.5		Id: 1/1