ECE517

Fall 2025

SEPIC Converter Design & Simulation

Scott Cann

Table of Contents

1. **Title**
2. **Abstract**
3. **Introduction/background**
4. **Design Procedure - Capacitance, Inductance**
5. **Design Procedure - Compensator**
6. **Simulation model**
7. **Simulation results**
8. **Discussion of results**
9. **Conclusion**

ECE 517 Fall 2025
SEPIC Converter Design
Scott Cann

Abstract

This project presents the design, modeling, and closed-loop control of a Single-Ended Primary Inductor Converter (SEPIC) intended for regulated DC output over a determined voltage range. The SEPIC topology was selected due to its ability to provide both step-up and step-down voltage conversion while maintaining non-inverted output polarity, making it suitable for low power electronics which do not require isolation. Analytical modeling was conducted to derive the steady-state relationships, determine component stresses, and select passive elements from commercially available components. A feedback control strategy based on a PI compensator was designed to ensure stable output regulation under load and input perturbations. The complete converter and controller were implemented and verified in PSIM, where time-domain simulations were performed to evaluate transient response, steady-state behavior, and closed-loop robustness. Simulation results demonstrate that the designed SEPIC converter meets the desired regulation performance and dynamic requirements, validating the modeling and design approach.

Introduction and Background

Many modern electrical systems operate from battery packs whose terminal voltage varies significantly with state of charge, load, and aging. Applications such as high-voltage LED lighting and distributed power systems commonly require a tightly regulated DC rail even when the supply fluctuates. In particular, a nominal 60V battery pack may have an output range of 58–68V, but require a stable 60 V bus for downstream electronics or lighting modules that cannot tolerate wide voltage swings. This requirement creates a need for a non-isolated converter capable of both stepping the voltage up when the battery is low and stepping it down when the battery is high.

The Single-Ended Primary Inductor Converter (SEPIC) is well suited for this type of application because it provides non-inverting step-up/step-down operation with continuous input current and relatively simple control requirements compared to other buck-boost topologies. Its ability to regulate an output voltage that lies within the input voltage range makes it an attractive solution for battery-powered systems where the desired output is close to the nominal battery voltage. However, the SEPIC's dual-inductor structure and coupling capacitor stresses require careful component selection and control-loop design to ensure stable, efficient operation.

This project focuses on modeling, designing, and simulating a closed-loop SEPIC converter capable of regulating a stable output voltage from a variable high-voltage DC source. The goal is to demonstrate the suitability of this converter topology for small up or down regulation of a supply voltage to maintain a steady 60V rail for downstream electronics by appropriate selection of passive components and compensator design.

Design Procedure - Capacitance, Inductance

The SEPIC topology is shown in the figure below.

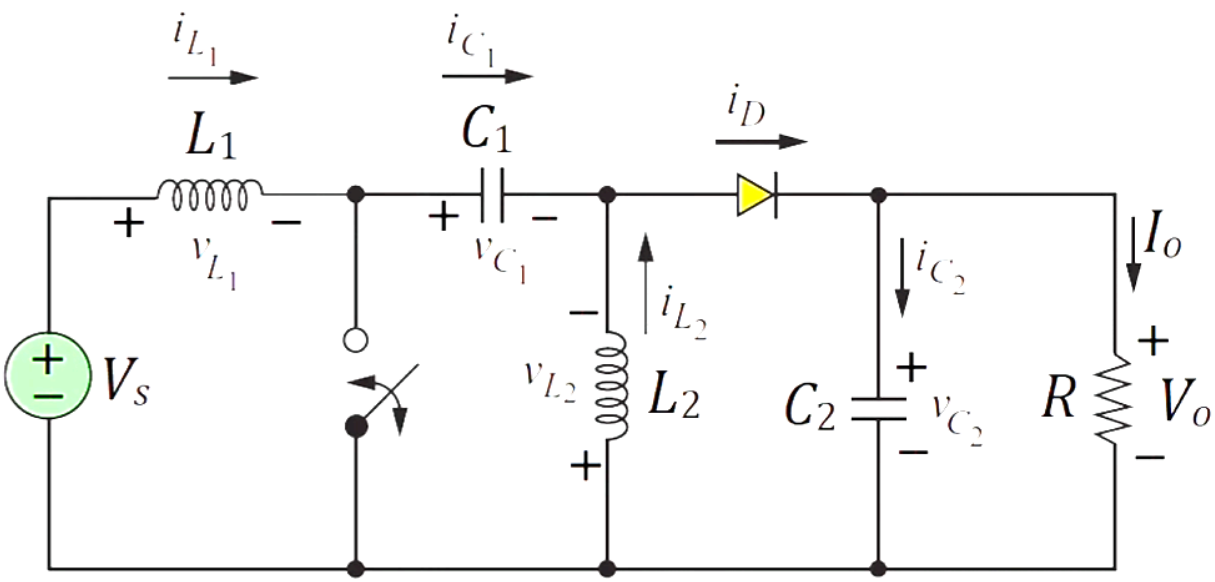

Figure1: Single-Ended Primary Inductor Converter topology

A nominal 60V battery pack is the input source for our converter, with a range from 56V-68V, depending on level of charge, loading, and various other factors. A 100W LED module serves as our output load, and requires 60V ± 5% to maintain level brightness and prevent internal damage. For safety margin, we will design for output voltage regulation of ± 2%.

Parameter	Nominal Value	Upper Limit	Lower Limit
Input Voltage	60V	68V	56V
Output Voltage	60V	+2%	-2%

Output Power	100W	+5%	-5%
Output Current	~1.67A	~1.75A	~1.59A

Table1: Performance Requirements

Designing our converter for 2.25A output will give us a ~28% factor of safety (FOS) on the output current upper limit (1.75A), which should be sufficient since LED modules are generally very stable loads. In terms of power, our output capability would be:

$$P_{max} = I_{max} * V_O = 2.25A * 60V = 135W$$

Which also gives a sufficient FOS on our 100W ± 5% output requirement. The load should be able to pull this maximum current under the boost condition (56V supply) and buck condition (68V supply). We will suppose our converter to be 90% efficient (η = 0.90), which we will consider when calculating nominal duty-cycle for switching. Our first design scenario is given in Table 2 below.

Parameter	**Value**
V_S	56V
$Output$	2.25A @60V (135W)
f_{switch}	50kHz

Table2: Boost Condition (56V)

Our nominal duty cycle is:

$$D_{boost} = \frac{1}{\eta} * \frac{V_O}{V_O + V_S} = \frac{1}{0.9} * \frac{60V}{60V + 56V} = 1.11 * 0.517 = 0.575$$

The load R (figure 1) is from our LED load, which can be found by dividing output voltage by current.

$$R_{boost} = \frac{V_{out}}{I} = \frac{60V}{2.25A} = 26.7\Omega$$

For inductor L_1 and inductor L_2, we will consider 25% inductor ripple acceptable. The general formulation for peak-to-peak current ripple of an inductor in a switching converter is:

$$\Delta I_{L\,(pp)} = \frac{V_{L\,(on)} * D}{L * f_{switch}}$$

When the switch is closed, inductor L_1 has the same voltage drop as the source V_S, and inductor L_2 has the same voltage drop as the output V_O when the switch is open. Substituting into the above equation, we see:

$$\Delta I_{L1\,(pp)} = \frac{V_S * D}{L_1 * f_{switch}}$$

$$\Delta I_{L2\,(pp)} = \frac{V_O * (1 - D)}{L_2 * f_{switch}}$$

Solving for inductance L, we see:

$$L_1 = \frac{V_S * D}{\Delta I_{L1\,(pp)} * f_{switch}}$$

$$L_2 = \frac{V_O * (1 - D)}{\Delta I_{L2\,(pp)} * f_{switch}}$$

The average current through C_1 and C_2 are zero in steady state (via capacitor charge balance), so the average current through L_2 will be the output current I_O. The average current through L_1 will be the same as the source $I_{S\,(avg)}$. This gives us:

$$I_{L_{2\,(avg)}} = I_O = 2.25A$$

$$I_{L_{1\,(avg)}} = I_{S\,(avg)} = \frac{P_{out}}{V_S} = \frac{I_O * V_O}{V_S} = \frac{2.25A * 60V}{56V} = 2.41A$$

For 25% inductor current ripple, the following is approximately true:

$$\Delta I_{L1\,(pp)} = 0.25 * I_{L_{1\,(avg)}} = 0.25 * 2.41A = 0.6025A$$

$$\Delta I_{L2\,(pp)} = 0.25 * I_{L_{2\,(avg)}} = 0.25 * 2.25A = 0.5625A$$

We now solve for inductor values under the boost condition:

$$L_{1\,(boost)} = \frac{V_S * D}{\Delta I_{L1\,(pp)} * f_{switch}} = \frac{56V * 0.575}{0.6025A * 50kHz} = 1.07mH$$

$$L_{2\,(boost)} = \frac{V_O * (1 - D)}{\Delta I_{L2\,(pp)} * f_{switch}} = \frac{60V * (1 - 0.575)}{0.5625A * 50kHz} = 1.145mH$$

From our performance requirements, output voltage ripple $\Delta V_{O\,(pp)}$ should be 2% of the output voltage V_O. And, since voltage across C_2 is equivalent to V_O by KVL, our voltage ripple across C_2, $\Delta V_{C_2\,(pp)}$ should be:

$$\Delta V_{O\,(pp)} = 0.04 * V_O = 0.02 * 60V = 1.2V$$

$$\Delta V_{C_2\,(pp)} = \Delta V_{O\,(pp)}$$

$$\Delta V_{C_2\,(pp)} = 1.2V$$

Capacitor voltage ripple due to charge/discharge during switching periods is given by:

$$\Delta V_{C_2(charge)} = \frac{I_{C_2\,(max)} * D_{boost}}{C_{2\,(boost)} * f_{switch}} = \frac{2.25A * 0.575}{C_{2\,(boost)} * 50kHz} = \frac{0.000026A*s}{C_{2\,(boost)}}$$

And voltage ripple due to capacitor ESR is given by:

$$\Delta V_{C_2\,(ESR)} \approx ESR_{C_2} * \left(\frac{I_{C_2\,(max)}}{1 - D} + \frac{\Delta I_{C_2}}{2}\right) = ESR_{C_2} * \left(\frac{2.25A}{1 - 0.575} + \frac{0.5625A}{2}\right)$$

$$\Delta V_{C_2\,(ESR)} \approx 5.58A * ESR_{C_2}$$

Where ESR_{C_2} is the electrical series resistance of the non-ideal capacitor, measured in ohms (Ω). Total voltage ripple through C_1 including contributions from ESR_{C_1} is found to be:

$$\Delta V_{C_2\,(pp)} = \Delta V_{C_2(charge)} + \Delta V_{C_2\,(ESR)}$$

$$1.2V = \frac{0.000026A*s}{C_{2\,(boost)}} + 5.58A * ESR_{C_2}$$

Then solved for capacitance C_2 under boost condition for 4% voltage ripple:

$$C_{2\,(boost)} = \frac{26uA*s}{1.2V - 5.58A*ESR_{C_2}} = \frac{26}{1.2 - 5.58\frac{1}{\Omega}*ESR_{C_2}}uF$$

Total voltage ripple through C_1 including contributions from ESR_{C_1} is found to be:

$$\Delta V_{C_1\,(pp)} = \Delta V_{C_1\,(charge)} + \Delta V_{C_1\,(ESR)} = \frac{I_O * D_{boost}}{C_1 * f_{switch}} + ESR_{C_1} * \left(\frac{I_{C_1\,(max)}}{1 - D_{boost}} + \frac{\Delta I_{C_1}}{2}\right)$$

$$\Delta V_{C_1\,(pp)} = \frac{2.25A * 0.575}{C_{1(boost)} * 50kHz} + ESR_{C_1} * \left(\frac{2.25A}{1 - 0.575} + \frac{0.6025A}{2}\right) = \frac{0.000026A*s}{C_{1\,(boost)}} + 5.60A * ESR_{C_1}$$

Average voltage across C_1 is the same as source voltage V_S, due to inductor volt-second balance, and taking KVL of the loop. Then we can find voltage ripple $\Delta V_{C_1\,(pp)}$ for 2% requirement:

$$V_{C_1(avg)} = V_S = 56V$$

$$0.02 = \frac{\Delta V_{C_1\,(pp)}}{V_{C_1(avg)}} = \frac{\Delta V_{C_1\,(pp)}}{56V}$$

$$\Delta V_{C_1\,(pp)} = 1.12V$$

Solving for C_1 under boost condition and 2% ripple:

$$1.12V = \frac{0.000026A*s}{C_{1\,(boost)}} + 5.60A * ESR_{C_1}$$

$$C_{1\,(boost)} = \frac{26uA*s}{1.12V - 5.60A * ESR_{C_1}} = \frac{26}{1.12 - 5.60\frac{1}{\Omega} * ESR_{C_1}} uF$$

Next, the buck condition is captured in table 3.

Parameter	Value
V_S	68V
$Output$	2.25A @60V (135W)
f_{switch}	50kHz

Table3: Buck Condition (68V)

Design parameters are next calculated for buck condition, 25% inductor ripple, 2% capacitor ripple, summarized below.

$$D_{buck} = \frac{1}{\eta} * \frac{V_O}{V_O + V_S} = \frac{1}{0.9} * \frac{60V}{60V + 68V} = 1.11 * 0.469 = 0.520$$

$$R_{buck} = \frac{V_{out}}{I} = \frac{60V}{2.25A} = 26.7\Omega$$

Average currents and ripple values for inductors:

$$I_{L_{1\,(avg)}} = I_{S\,(avg)} = \frac{P_{out}}{V_S} = \frac{I_O * V_O}{V_S} = \frac{2.25A * 60V}{68V} = 1.99A$$

$$I_{L_{2\,(avg)}} = I_O = 2.25A$$

$$\Delta I_{L1\,(pp)} = 0.25 * I_{L_{1\,(avg)}} = 0.25 * 1.99A = 0.4975A$$

$$\Delta I_{L2\,(pp)} = 0.25 * I_{L_{2\,(avg)}} = 0.25 * 2.25A = 0.5625A$$

Solved inductor values under the buck condition:

$$L_{1\,(buck)} = \frac{V_S * D}{\Delta I_{L1\,(pp)} * f_{switch}} = \frac{68V * 0.520}{0.4975A * 50kHz} = 1.42mH$$

$$L_{2\,(buck)} = \frac{V_O * (1-D)}{\Delta I_{L2\,(pp)} * f_{switch}} = \frac{60V * 0.520}{0.5625A * 50kHz} = 1.11mH$$

Voltage ripples under buck condition:

$$\Delta V_{C_2\,(pp)} = \Delta V_{O\,(pp)} = 0.02 * 60V = 1.2V$$

$$\Delta V_{C_1\,(pp)} = 0.02 * V_{C_1(avg)} = 0.04 * V_S = 0.02 * 68V = 1.36V$$

In terms of ESR and C:

$$\Delta V_{C_1\,(pp)} = \Delta V_{C_1\,(charge)} + \Delta V_{C_1\,(ESR)} = \frac{I_O * D_{buck}}{C_1 * f_{switch}} + ESR_{C_1} * \left(\frac{I_{C_1\,(max)}}{1 - D_{boost}} + \frac{\Delta I_{C_1}}{2}\right)$$

$$1.36V = \frac{2.25A * 0.520}{C_1 * 50kHz} + ESR_{C_1} * \left(\frac{2.25A}{1-0.52} + \frac{0.4975A}{2}\right) = \frac{0.00023A*s}{C_1} + 5.185A * ESR_{C_1}$$

$$\Delta V_{C_2\,(pp)} = \Delta V_{C_2\,(charge)} + \Delta V_{C_2\,(ESR)} = \frac{I_O * D_{buck}}{C_2 * f_{switch}} + ESR_{C_2} * \left(\frac{I_{C_2\,(max)}}{1 - D_{boost}} + \frac{\Delta I_{C_2}}{2}\right)$$

$$1.2V = \frac{2.25A * 0.520}{C_2 * 50kHz} + ESR_{C_2} * \left(\frac{2.25A}{1-0.52} + \frac{0.5625A}{2}\right) = \frac{0.000023A*s}{C_2} + 4.97A * ESR_{C_2}$$

Solving for capacitance:

$$C_{1\,(buck)} = \frac{23uA*s}{1.36V - 5.185A * ESR_{C_1}} = \frac{23}{1.36 - 5.185\frac{1}{\Omega} * ESR_{C_1}} uF$$

$$C_{2\,(buck)} = \frac{23uA*s}{1.2V - 4.97A * ESR_{C_2}} = \frac{23}{1.2 - 4.97\frac{1}{\Omega} * ESR_{C_2}} uF$$

The ESR-dependent values for C_1 and C_2 under the buck and boost conditions are plotted below.

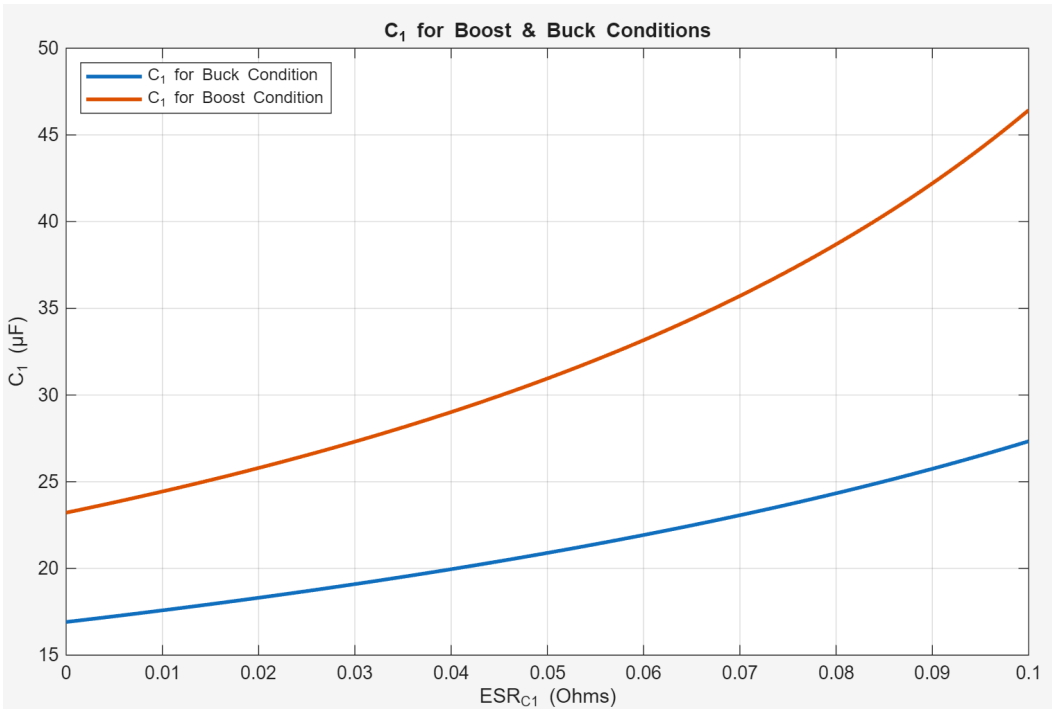

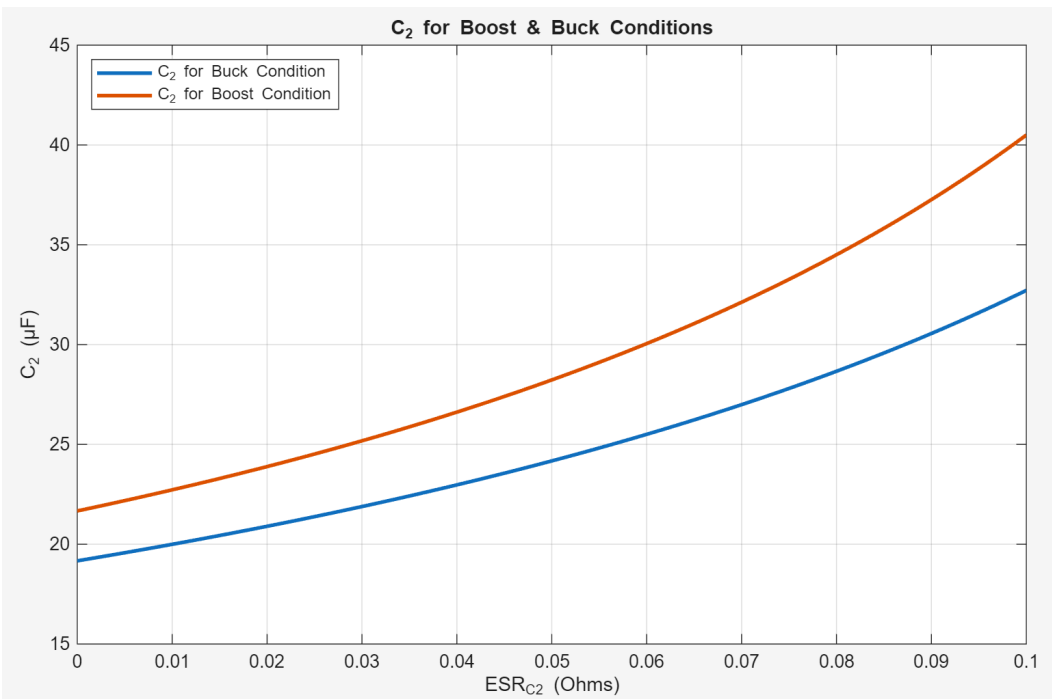

Figure2: ESR-dependent capacitor sizing under buck and boost conditions

The capacitance value for $ESR_{C_1}, ESR_{C_2} = 45m\Omega$ under the boost condition will be considered for capacitor sizing, as it has a larger requirement than the buck condition for 2% voltage ripple. When capacitors are selected for the SEPIC converter from a catalog, we can guarantee performance if they are sized accordingly and have $ESR_{C_1}, ESR_{C_2} \leq 45m\Omega$. Summarized values and design parameters for the converter are in the table below.

	Parameter	Boost Values	Buck Values	Selected Value
	$Output$	2.25A @60V (135W)		
	f_{switch}	50kHz		
	V_S	$56V$	$68V$	$56 - 68V$
Design	L_1	$1.07mH$	$1.42mH$	$1.42mH$
	L_2	$1.145mH$	$1.11mH$	$1.145mH$
	C_1	$\frac{26}{1.12 - 5.60\frac{1}{\Omega} * ESR_{C_1}} uF$	$\frac{23}{1.36 - 5.185\frac{1}{\Omega} * ESR_{C_1}} uF$	-
	C_2	$\frac{26}{1.2 - 5.58\frac{1}{\Omega} * ESR_{C_2}} uF$	$\frac{23}{1.2 - 4.97\frac{1}{\Omega} * ESR_{C_2}} uF$	-
	C_1 $(ESR \leq 45m\Omega)$	-		$30uF$
	C_2 $(ESR \leq 45m\Omega)$	-		$27.5uF$

Table4: Design Summary

Design Procedure - Compensator

In order to design an appropriate compensator, the converter dynamics were modeled in averaged state-space over the switching period. Design parameters and all other values were substituted for a numerical representation, and PI gains were chosen

to ensure stability and fast settling time of the output voltage to 60V. The state vector is a 4-space column vector of inductor currents and capacitor voltages. Table 5 and 6 show the open and closed switch modes of operation.

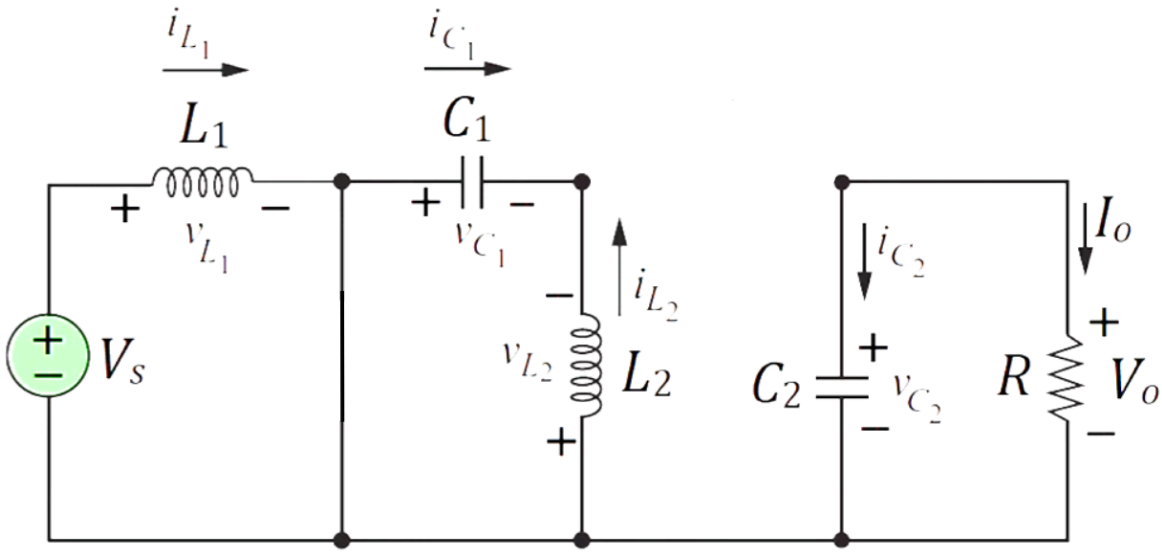

Figure 3: Closed switch mode operation for $D * T_s$

From KVL and KCL we can obtain explicit first order differential equations which can be compiled into a state space representation for the closed switch mode of operation. Symbolic matrices/vectors shown from MATLAB.

$$\cdot \frac{d}{dt} I_{L1} = \frac{V_S}{L_1} \qquad \cdot \frac{d}{dt} V_{C1} = \frac{-I_{L2}}{C_1}$$

$$\cdot \frac{d}{dt} I_{L2} = \frac{V_{C1}}{L_2} \qquad \cdot \frac{d}{dt} V_{C2} = \frac{-V_{C_2}}{R_{load} * C_2}$$

$$\text{x} = \begin{pmatrix} I_{L1} \\ I_{L2} \\ v_{c1} \\ v_{c2} \end{pmatrix} \quad \text{A_on} = \begin{pmatrix} 0 & 0 & 0 & 0 \\ 0 & 0 & \frac{1}{L_{2,\text{sym}}} & 0 \\ 0 & -\frac{1}{C_{1,\text{sym}}} & 0 & 0 \\ 0 & 0 & 0 & -\frac{1}{C_{2,\text{sym}} R_{\text{load,sym}}} \end{pmatrix} \quad \text{B_on} = \begin{pmatrix} \frac{1}{L_{1,\text{sym}}} \\ 0 \\ 0 \\ 0 \end{pmatrix}$$

Figure 4: Mosfet on state space representation

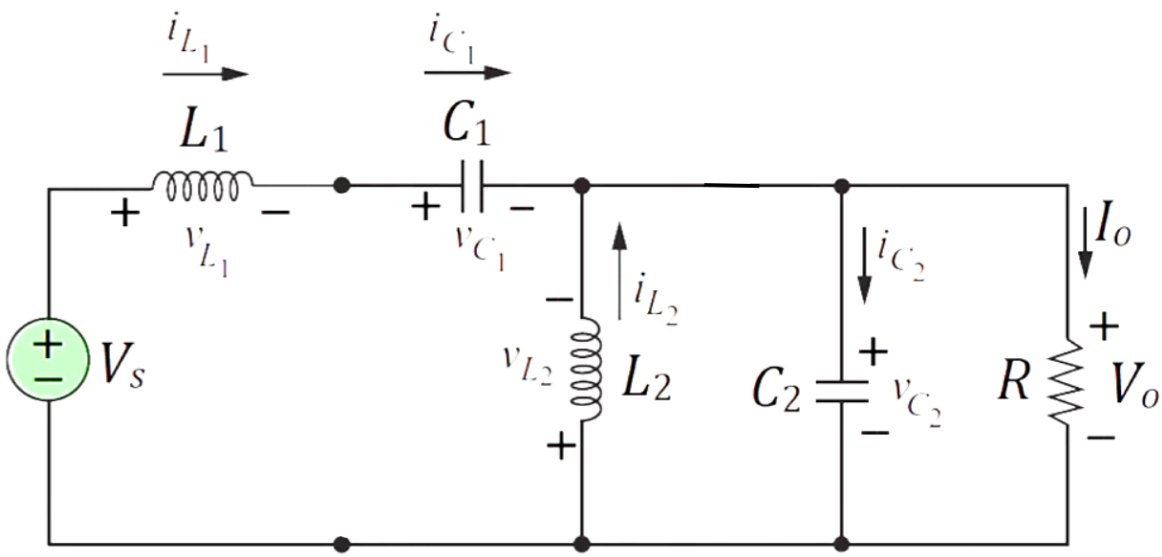

Figure 5: Open switch mode of operation for $(1 - D) * T_s$

$$\cdot \frac{d}{dt} I_{L1} = \frac{V_S - V_{C_1} - V_{C_2}}{L_1} \qquad \cdot \frac{d}{dt} V_{C1} = \frac{I_{L1}}{C_1}$$

$$\cdot \frac{d}{dt} I_{L2} = \frac{-V_{C_2}}{L_2} \qquad \frac{d}{dt} V_{C_2} = \frac{I_{L_2} + I_{L_1}}{C_2} + \frac{V_{C_2}}{R_{load} * C_2}$$

```
x =
```
$$\begin{pmatrix} I_{L1} \\ v_{c1} \\ I_{L2} \\ v_{c2} \end{pmatrix}$$

```
A_off =
```
$$\begin{pmatrix} 0 & 0 & -\frac{1}{L_{1,sym}} & -\frac{1}{L_{1,sym}} \\ 0 & 0 & 0 & -\frac{1}{L_{2,sym}} \\ \frac{1}{C_{1,sym}} & 0 & 0 & 0 \\ \frac{1}{C_{2,sym}} & \frac{1}{C_{2,sym}} & 0 & -\frac{1}{C_{2,sym} R_{load,sym}} \end{pmatrix}$$

```
B_off =
```
$$\begin{pmatrix} \frac{1}{L_{1,sym}} \\ 0 \\ 0 \\ 0 \end{pmatrix}$$

Figure 6: Mosfet on state space representation

The average state space representation was calculated as a linear combination of the on and off state representations, scaled by the on and off period. The steady state (final) value of the state vector can be found by setting the derivative of the state vector to zero. See figures below.

```
A_avg = simplify(D*A_on + D_prime*A_off)
B_avg = simplify(D*B_on + D_prime*B_off)
C_avg = 1;

x_f = -A_avg\B_avg*v_source
```

Figure 7: MATLAB code for averaged model and final value

x_f =

$$\begin{pmatrix} \frac{D^2\, v_{source}}{D'^2\, R_{load,sym}} \\ \frac{D\, v_{source}}{D'\, R_{load,sym}} \\ v_{source} \\ \frac{D\, v_{source}}{D'} \end{pmatrix}$$

A_avg =

$$\begin{pmatrix} 0 & 0 & -\frac{D'}{L_{1,sym}} & -\frac{D'}{L_{1,sym}} \\ 0 & 0 & \frac{D}{L_{2,sym}} & -\frac{D'}{L_{2,sym}} \\ \frac{D'}{C_{1,sym}} & -\frac{D}{C_{1,sym}} & 0 & 0 \\ \frac{D'}{C_{2,sym}} & \frac{D'}{C_{2,sym}} & 0 & -\frac{D + D'}{C_{2,sym}\, R_{load,sym}} \end{pmatrix}$$

B_avg =

$$\begin{pmatrix} \frac{1}{L_{1,sym}} \\ 0 \\ 0 \\ 0 \end{pmatrix}$$

Figure 8: Averaged model and final value results

Recalling that the fourth element in the state vector is $V_{C_2} = V_{out}$, the steady state output voltage for our LTI system is

$$V_{out} = \frac{D * V_{source}}{1 - D}$$

which was expected.

Ss symbolic, ss numerical, pi feedback, bode/rootlocus, then simulation goes in the next section after open loop.

Simulation Model

Performance of the SEPIC converter with the selected inductor/capacitor values was simulated in open-loop at the 56-68V input voltage range. Simulation was done in MATLAB/Simulink.

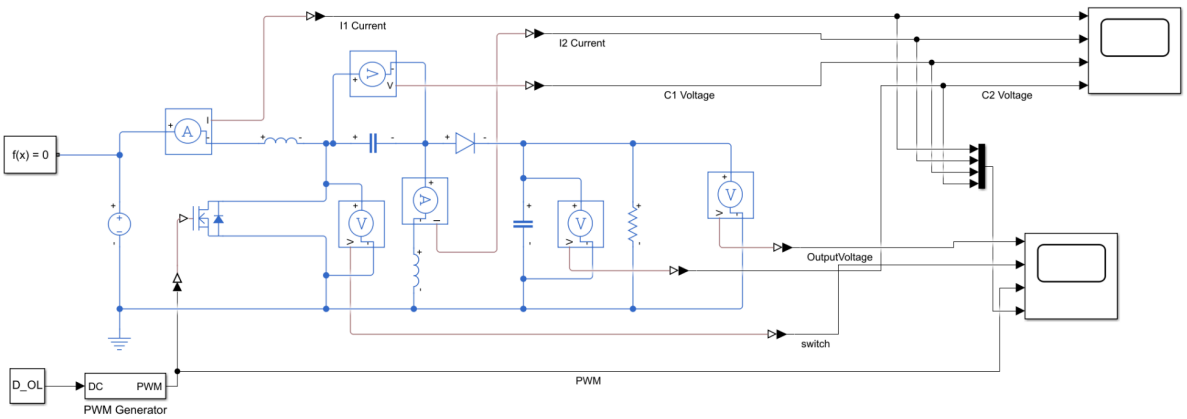

Figure9: Open-loop SEPIC converter modeled in Simulink environment with Simscape electrical components. Includes non-idealities, see *Table5*.

Parameter	**Open-loop Simulation**		
	1 (Boost)	**2** ($V_{source} = V_{out}$)	**3** (Buck)
f_{switch}	50kHz		
V_S	$56V$	$60V$	$68V$
D	0.517	0.5	0.469
L_1	$1.42mH$		
L_2	$1.145mH$		
C_1	$30uF$		
C_2	$27.5uF$		
ESR_{C_1}	$45m\Omega$		
ESR_{C_2}	$45m\Omega$		
$V_{forward,\,diode}$	$0.3V$		

$R_{DS,\,MOSFET}$	$10m\Omega$

Table 5: Open-loop Simulation Values

The Simulink model was expanded to co-simulate the LTI state-space system, which is ideal and averaged at 50% duty cycle.

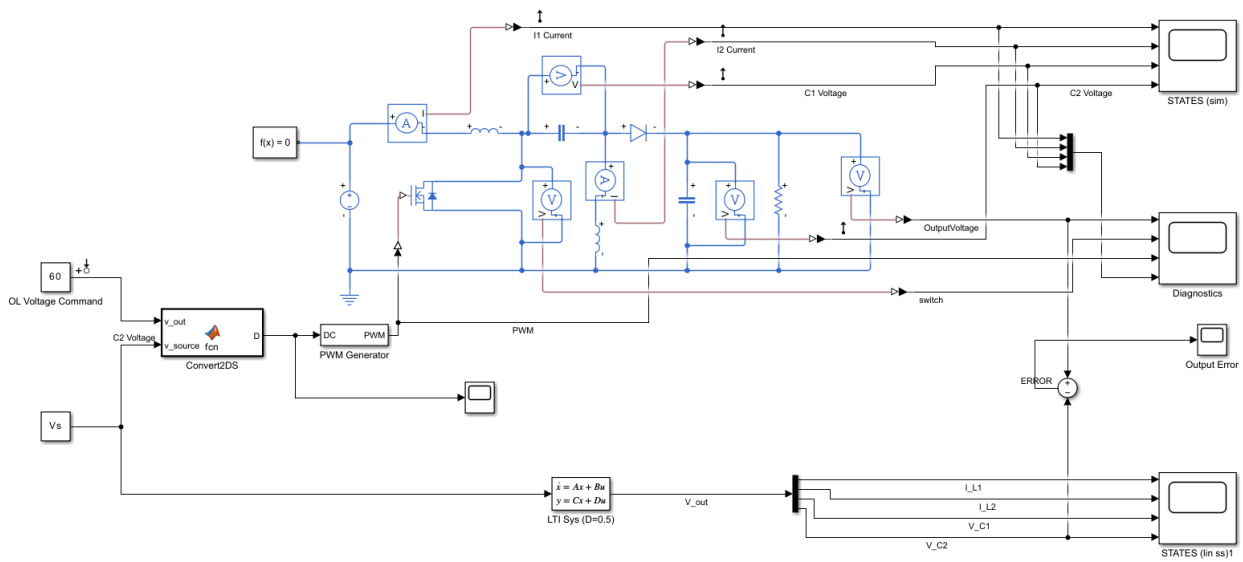

Figure10: Simscape (nonlinear) model and LTI state space model co-simulated

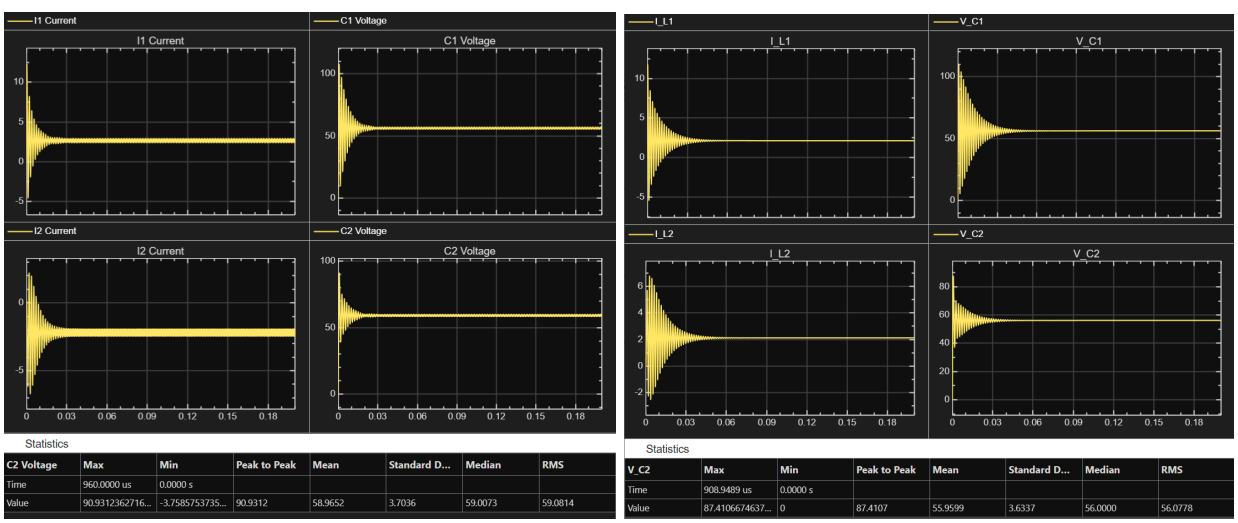

Figure11: Open Loop Sim1 ($boost\ condition$), Simscape (left) and LTI (right)

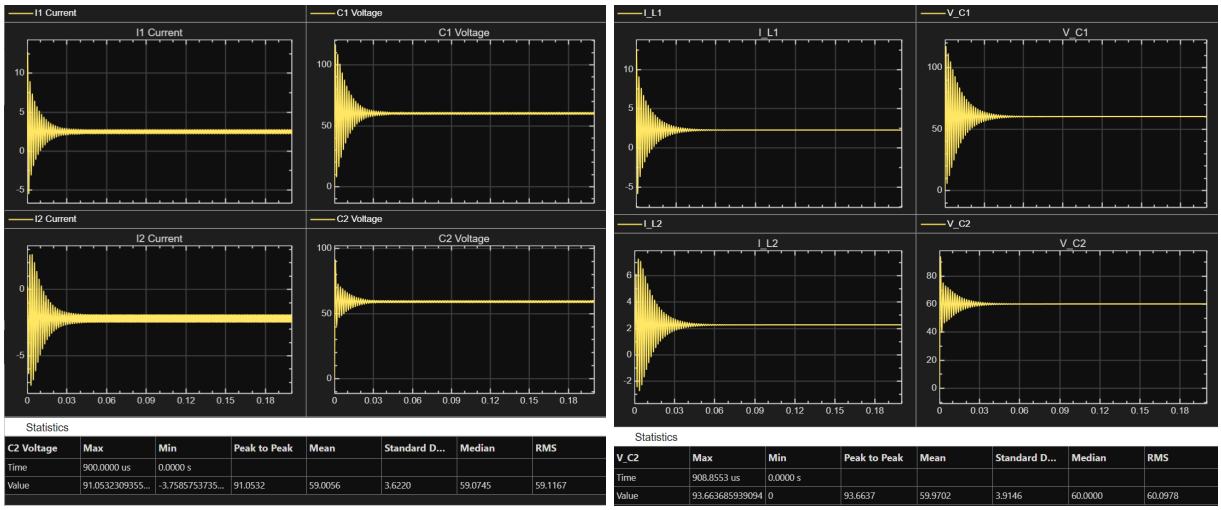

Figure12: Open Loop Sim2 ($V_{source} = V_{out} = 60V$), Simscape (left) and LTI (right)

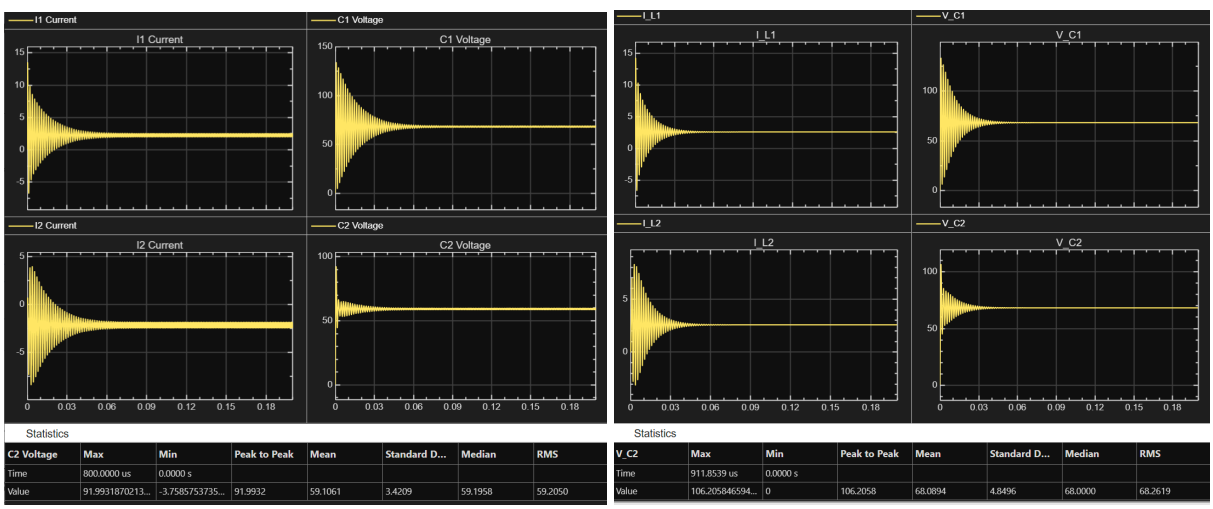

Figure13: Open Loop Sim3 ($buck\ condition$), Simscape (left) and LTI (right)

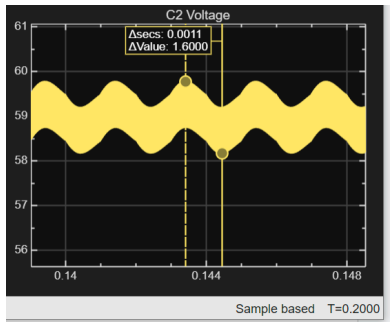

Figure14: Peak-peak output voltage ripple is ~2.7% (1.6V) in open-loop

From the state space LTI system averaged at 50% duty cycle a set of 4 transfer functions were obtained for the 4th order SEPIC converter. From this a small-signal model was developed for small duty cycle perturbations from the 50% duty and 60V output steady state operation. The duty cycle to output voltage transfer function $G(D, V_{out})$ showed stable but non-minimum phase behavior, as seen by the negative real poles and right hand plane zeros in the figure below.

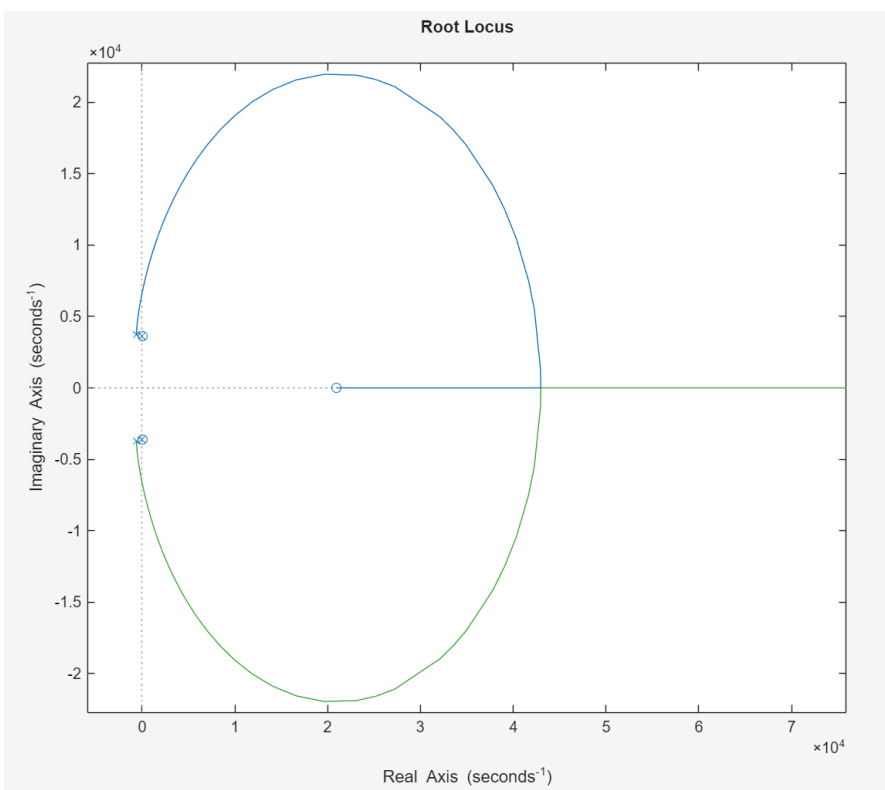

Figure15: Root Locus for transfer function $G(D, V_{out})$

MATLAB's control designer toolbox was used to design a PI compensator. A real zero was added one decade below the switching frequency of 50kHz, and gain was adjusted

for ~8dB gain margin. Upper bound control frequency (top left of the bode frequency plot) is ~76Hz (477rad/s), which is acceptable. See resulting Bode, Root-Locus and step response for the closed loop system below.

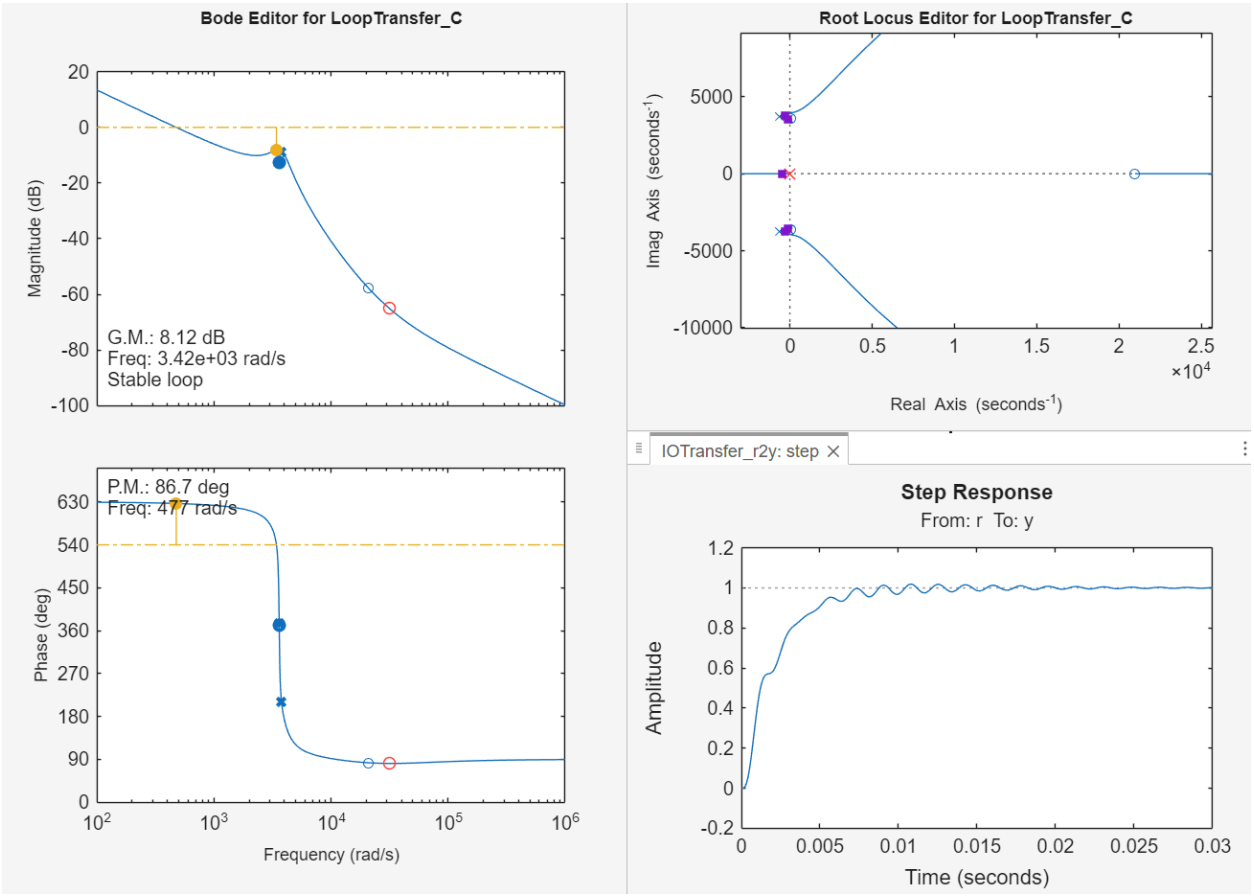

Figure16: Closed loop Bode, Root-Locus, and Step-Response with PI compensator

The initial undershoot in the step response at $\sim(2.5ms,\ 0.6V)$ is due to the non-minimum phase. The compensator design C was exported for simulation. The below figures show the compensator transfer function, and Simulink implementation.

```
C =

  6.2309e-05 (s+3.142e04)
  -----------------------
              s
```

Figure17: PI compensator Transfer Function

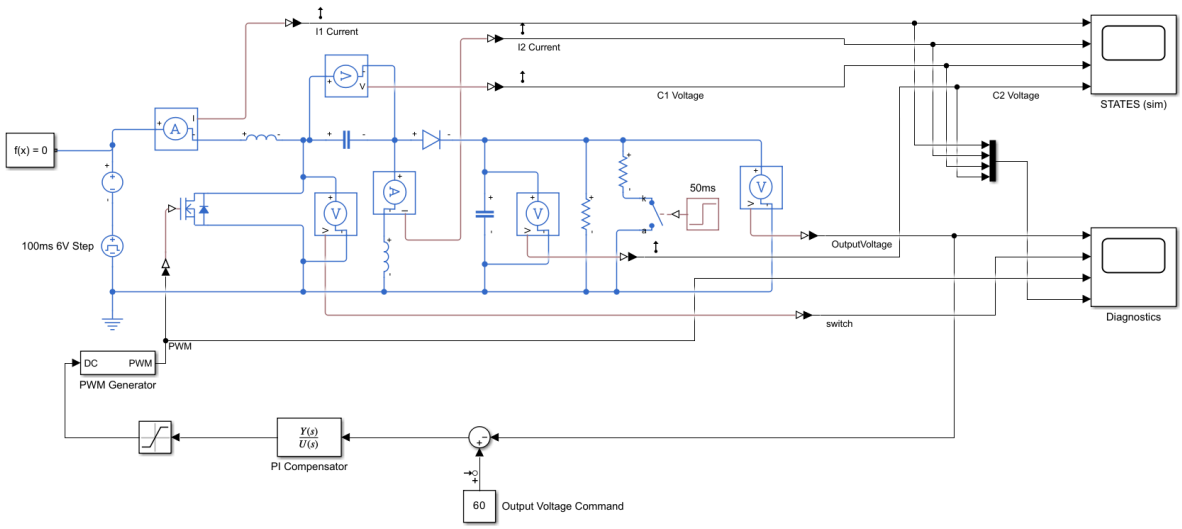

Figure 18: Closed-loop simulation topography includes disturbance elements (see *Table6*)

See table below for closed loop simulations conducted. All other model parameters were kept the same as the open loop configuration described in *Table 4*. At $50ms$ simulation time a load step disturbance is applied, and at $100ms$ a voltage source disturbance is applied.

Parameter	**Closed-loop Simulation**		
	1 (Boost)	**2** ($V_{source} = V_{out}$)	**3** (Buck)
V_S	$56V$	$60V$	$68V$
Disturbance 1	50% reduction in R_{load} at $T_{simulation} = 50ms$		
Disturbance 2	10% increase in V_{source} at $T_{simulation} = 100ms$		

Table 6: Closed-loop Simulation Values

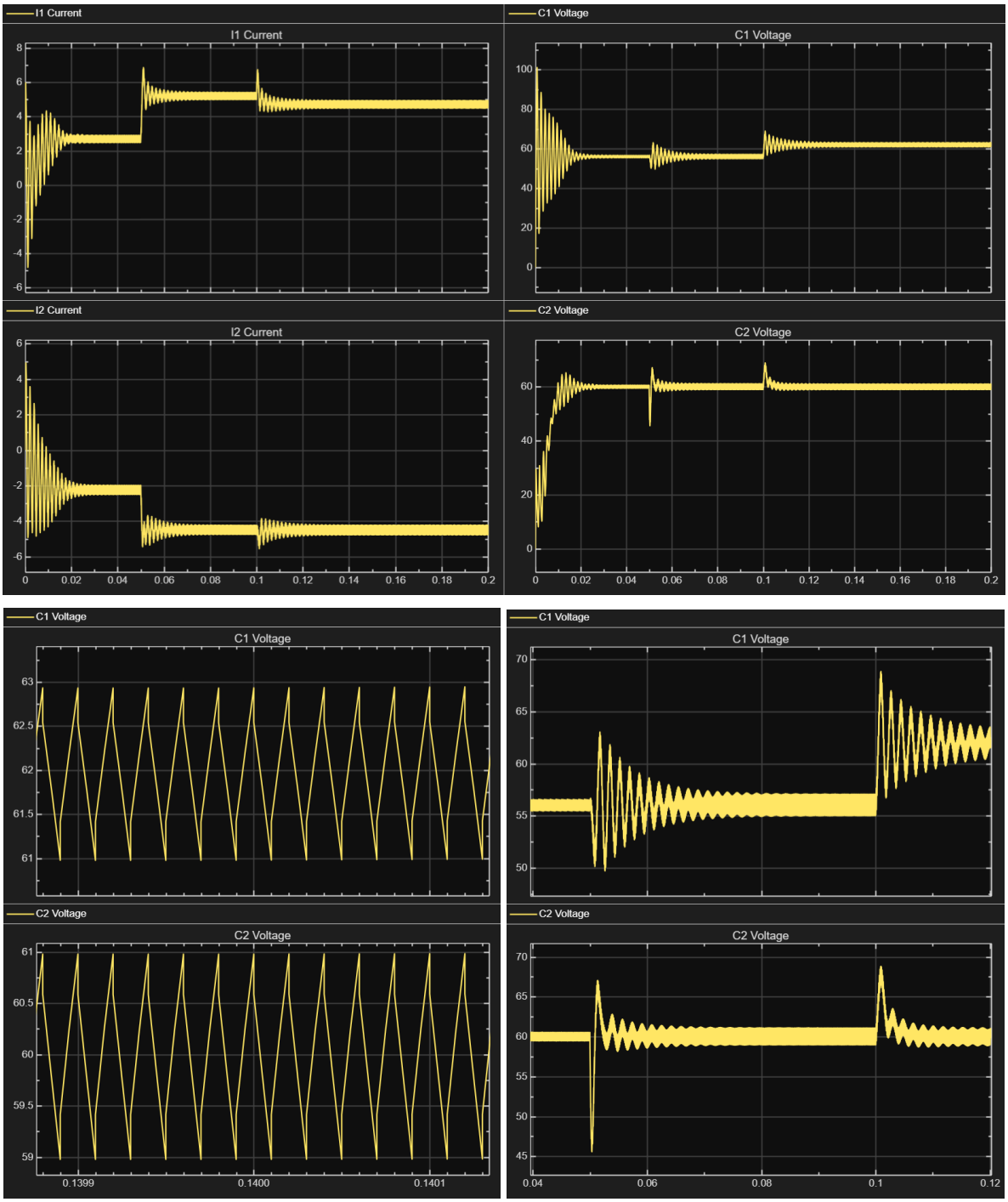

Figure19: Closed-Loop Sim1 ($Boost$) (top), Steady state peak-peak capacitor voltage (left), disturbance responses (right)

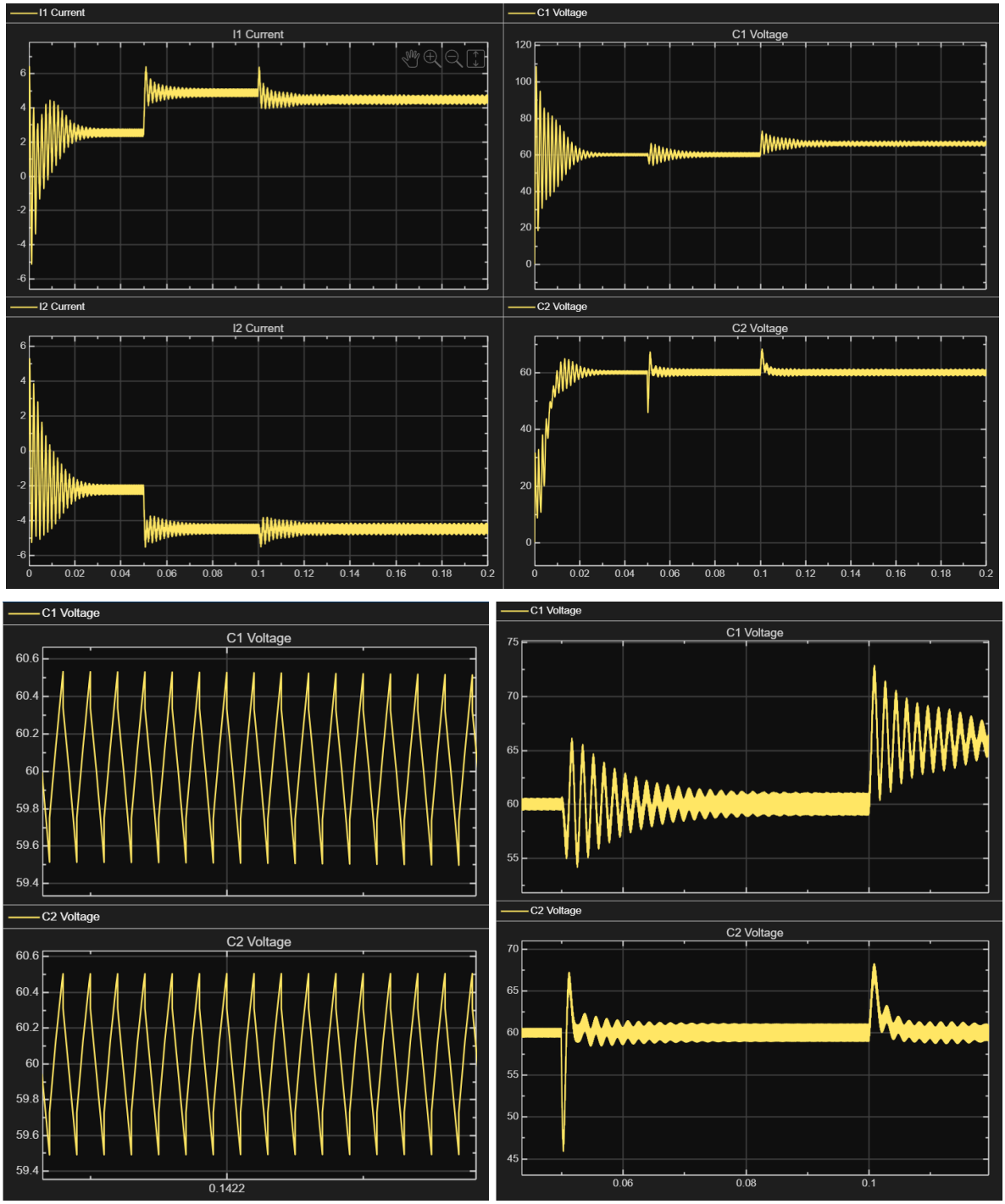

Figure20: Closed-Loop Sim2 ($V_{source} = V_{out}$) (top), Steady state peak-peak capacitor voltage (left), disturbance responses (right)

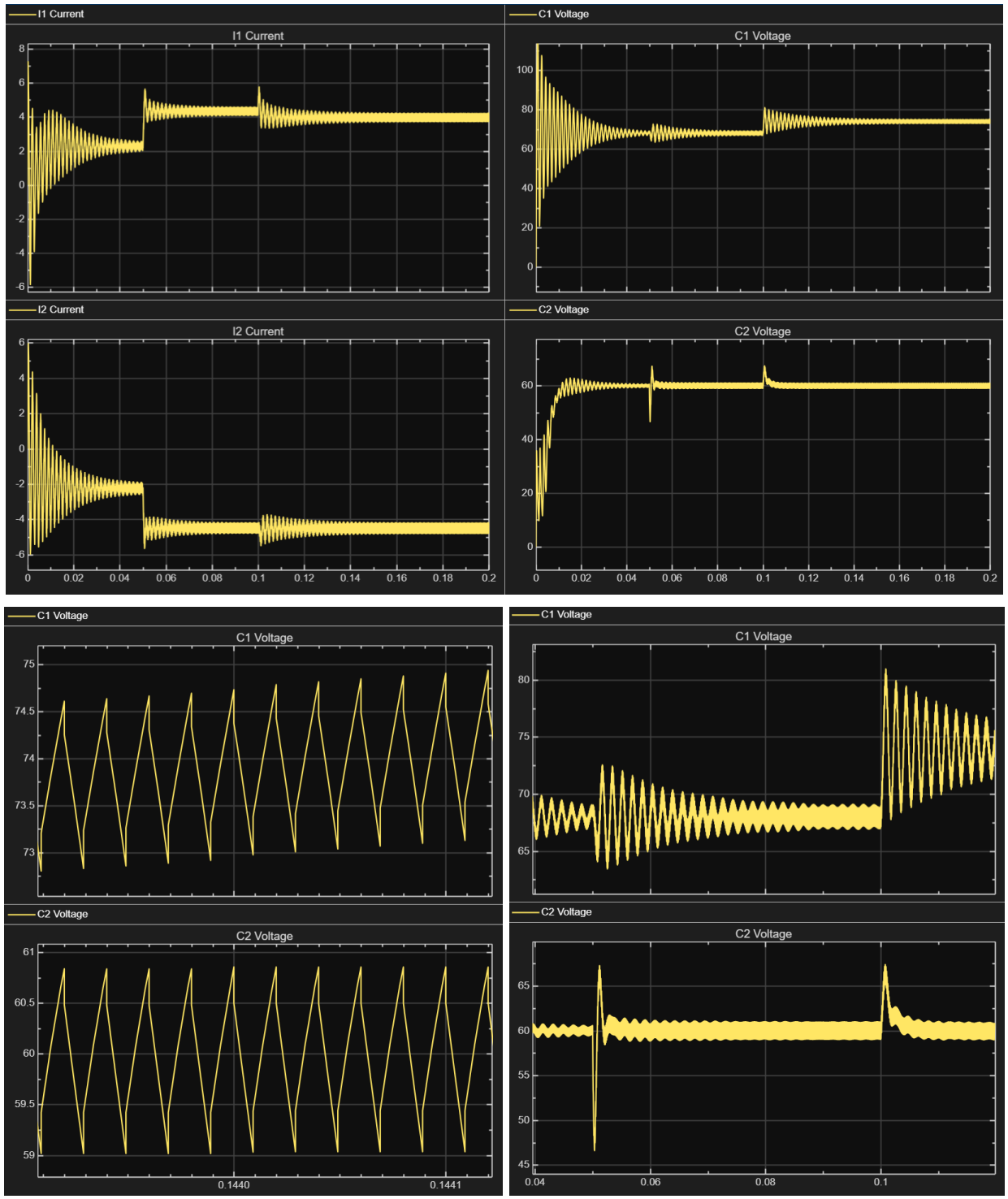

Figure21: Closed-Loop Sim3 ($Buck$) (top), Steady state peak-peak capacitor voltage (left), disturbance responses (right)

Discussion of Results:

As expected, our LTI state-space system had an output voltage approximately equal to the input voltage for all three open loop simulations, as we averaged the system matrices at a duty cycle of 50% (see right-side of *Figure 11, 12, 13*). In open-loop simulation of the Simscape model, our calculated duty cycles (0.469 for buck condition, 0.5 for $V_{source} = V_{output}$, and 0.517 for boost condition) each gave steady state $V_{output} = 60V \pm 1V$, and <3% peak-peak output voltage ripple at steady state.

Closing the loop with a PI controller improved settling time to ~25ms, and showed <2% peak-peak voltage ripple at the output after ~40ms for the $V_{source} = V_{out}$ condition. Under the buck condition a ~3% peak-peak output voltage ripple was reached in steady state, which increased to ~3.5% under the boost condition. For use with LED modules, this ripple would be generally acceptable. Capacitors were sized for 2% output voltage ripple, and so the higher values seen in simulation are likely from the idealizations made during ripple calculations and unmodeled dynamics that are active in the circuits simulation. Peak-peak L_1 inductor current ripple remained <0.5A for boost and buck conditions, and <0.4A for L_2, which is less than the 25% design value.

The 7dB gain margin of the PI compensator was able to handle aggressive disturbances without instability (50% load reductions and 10% source voltage increases). It is likely that a more aggressively tuned PI could improve performance while remaining robust.

Component	Value	Info	Product
L_1	$1.42mH$	22.5A rating, $5m\Omega$ DCR	SCR31H-225-2R0A014J KEMET | Mouser
L_2	$1.145mH$		
C_1	$33uF$	$38m\Omega$ ESR, 100VDC rating	RPF1014330M100K KYOCERA AVX | Mouser
C_2	$33uF$		

Table 7: Passive component model numbers for building the discussed SEPIC design

Conclusion:

In this report, a single-ended primary inductor converter (SEPIC) was designed analytically for 2% capacitor ripple and 25% inductor ripple under a 56-68V DC input range and 60V, 135W output load. Open-loop simulations were performed to validate ripple characteristics and general performance. System dynamics were solved for two discrete conduction modes and averaged into a small-signal LTI state space representation. This idealized model was used to design a PI compensator for closed loop voltage control, which was implemented in the Simulink model. The compensator proved stable and robust under large load and source voltage disturbances. In Table 7, appropriate catalog components for building this converter have been listed.