US 20240414108A1

(19) United States
(12) Patent Application Publication
Sun et al.
(10) Pub. No.: US 2024/0414108 A1
(43) Pub. Date: Dec. 12, 2024

(54) **CHATBOT LONG-TERM MEMORY**

(71) Applicant: **Snap Inc.**, Santa Monica, CA (US)

(72) Inventors: **Haowen Sun**, Redmond, WA (US); **William Spencer Mulligan**, Los Angeles, CA (US); **Nathan Kenneth Boyd**, Los Angeles, CA (US); **Hee Hun Kim**, Los Angeles, CA (US); **Dmytro Ishchenko**, Los Angeles, CA (US); **Lily Hinkeldey**, Maitland, FL (US); **Jason Brewer**, Mountain View, CA (US); **Charles Melbye**, Sherman Oaks, CA (US); **Aleksandr Mashrabov**, Los Angeles, CA (US)

(21) Appl. No.: **18/677,723**

(22) Filed: **May 29, 2024**

Related U.S. Application Data

(60) Provisional application No. 63/472,290, filed on Jun. 10, 2023.

Publication Classification

(51) **Int. Cl.**
H04L 51/02 (2006.01)
G06F 16/34 (2006.01)
H04L 51/216 (2006.01)

(52) **U.S. Cl.**
CPC ***H04L 51/02*** (2013.01); ***G06F 16/345*** (2019.01); ***H04L 51/216*** (2022.05)

(57) **ABSTRACT**

A chatbot system for an interactive platform is disclosed. The chatbot system retrieves a conversation history of one or more conversations between a user and a chatbot from a conversation history datastore and generates one or more summarized memories using the conversation history. One or more moderated memories are generated using the summarized memories. The moderated memories are stored in a memories datastore. A user prompt is received, and a current conversation context is generated from a current conversation between the user and the chatbot. One or more memories are retrieved from the memories datastore using the current conversation context. An augmented prompt is generated using the user prompt and the one or more memories, which is communicated to a generative AI model. A response is received from the generative AI model to the augmented prompt, which is provided to the user.

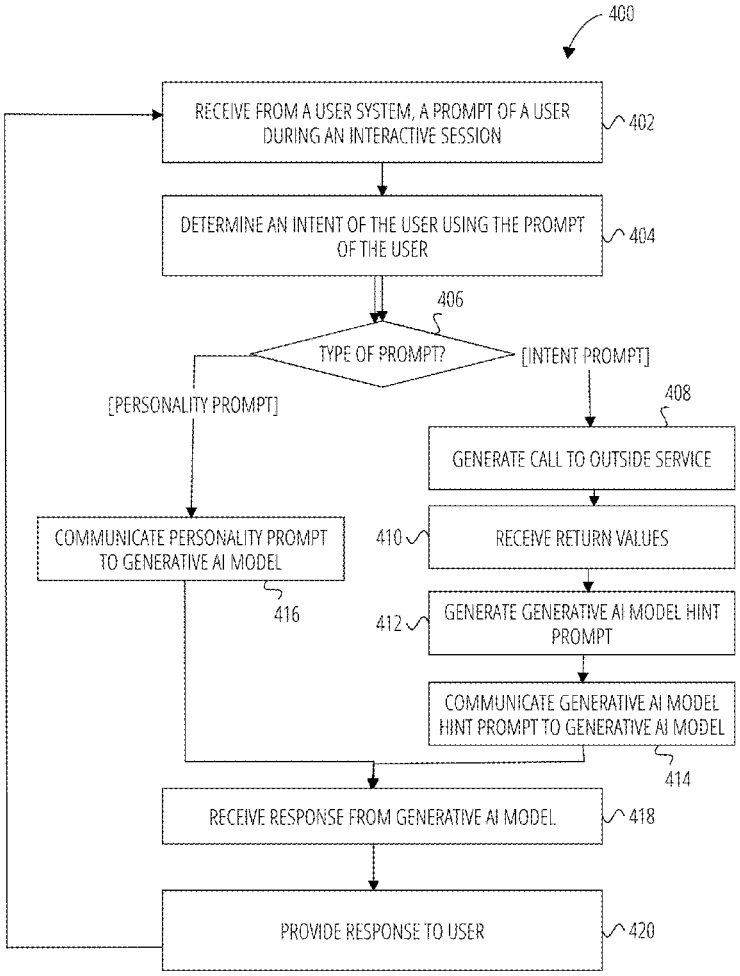

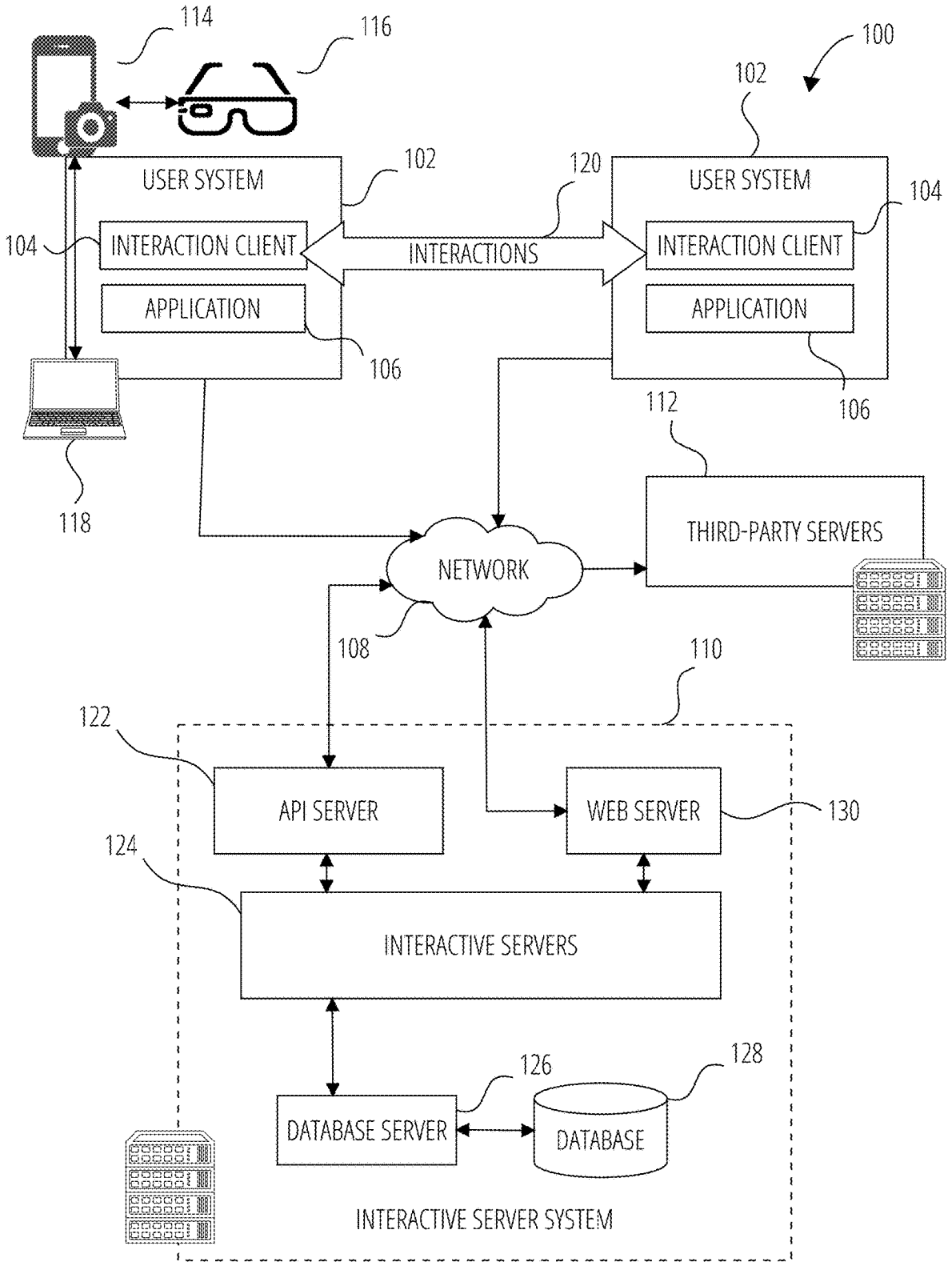
114
116
100
102
USER SYSTEM
102
120
USER SYSTEM
104
104
INTERACTION CLIENT
INTERACTIONS
INTERACTION CLIENT
APPLICATION
APPLICATION
106
106
112
118
THIRD-PARTY SERVERS
NETWORK
108
110
122
API SERVER
WEB SERVER
130
124
INTERACTIVE SERVERS
126
128
DATABASE SERVER
DATABASE
INTERACTIVE SERVER SYSTEM

FIG. 1

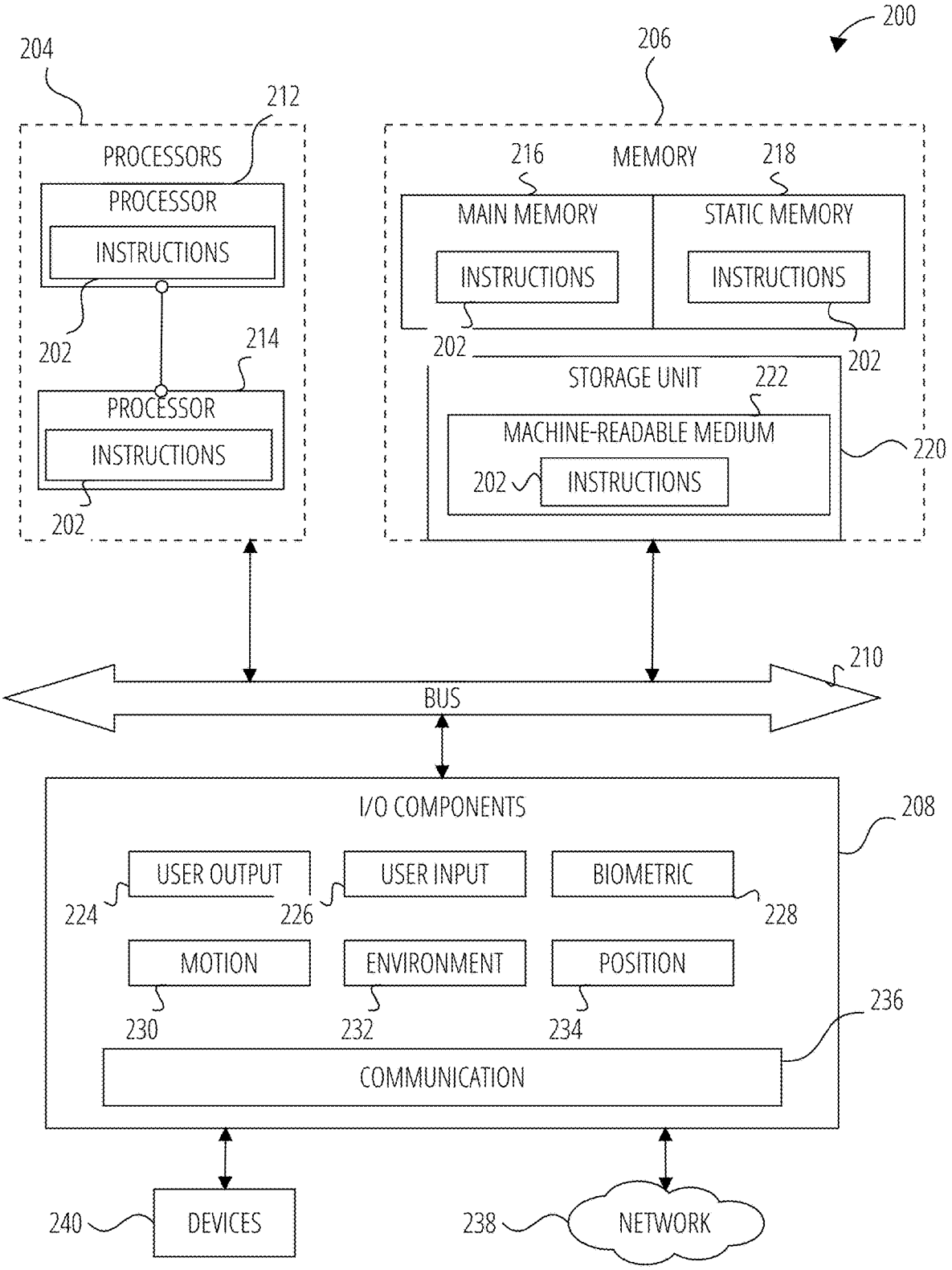
200
204
206
212
PROCESSORS
PROCESSOR
INSTRUCTIONS
202
214
PROCESSOR
INSTRUCTIONS
202
216
MEMORY
218
MAIN MEMORY
STATIC MEMORY
INSTRUCTIONS
INSTRUCTIONS
202
202
STORAGE UNIT
222
MACHINE-READABLE MEDIUM
202
INSTRUCTIONS
220
210
BUS
I/O COMPONENTS
208
USER OUTPUT
USER INPUT
BIOMETRIC
224
226
228
MOTION
ENVIRONMENT
POSITION
230
232
234
236
COMMUNICATION
240
DEVICES
238
NETWORK

FIG. 2

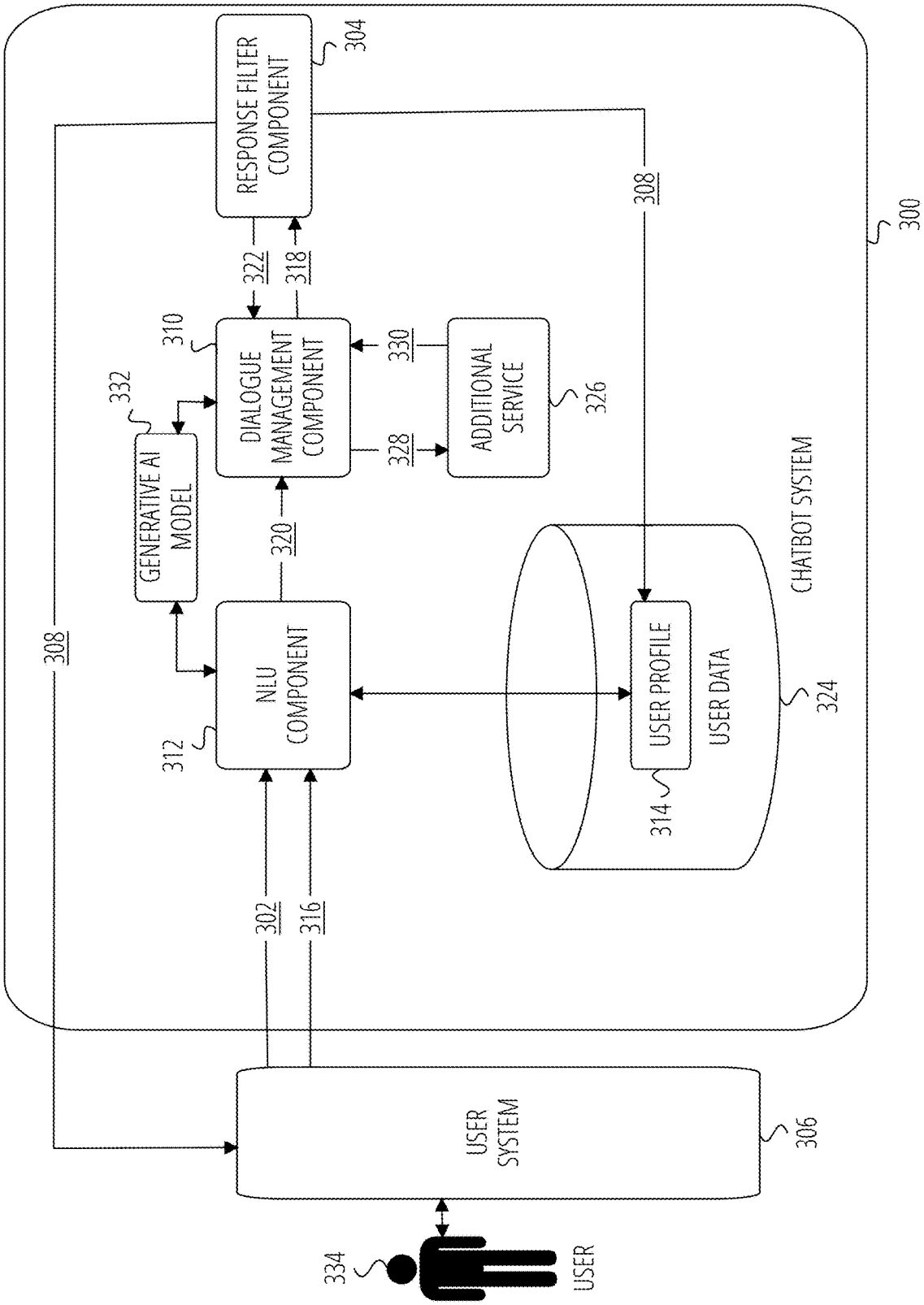
RESPONSE FILTER COMPONENT
304
308
300
322
318
310
DIALOGUE MANAGEMENT COMPONENT
330
ADDITIONAL SERVICE
326
332
GENERATIVE AI MODEL
328
320
CHATBOT SYSTEM
308
NLU COMPONENT
USER PROFILE
USER DATA
324
312
314
302
316
USER SYSTEM
306
334
USER

FIG. 3

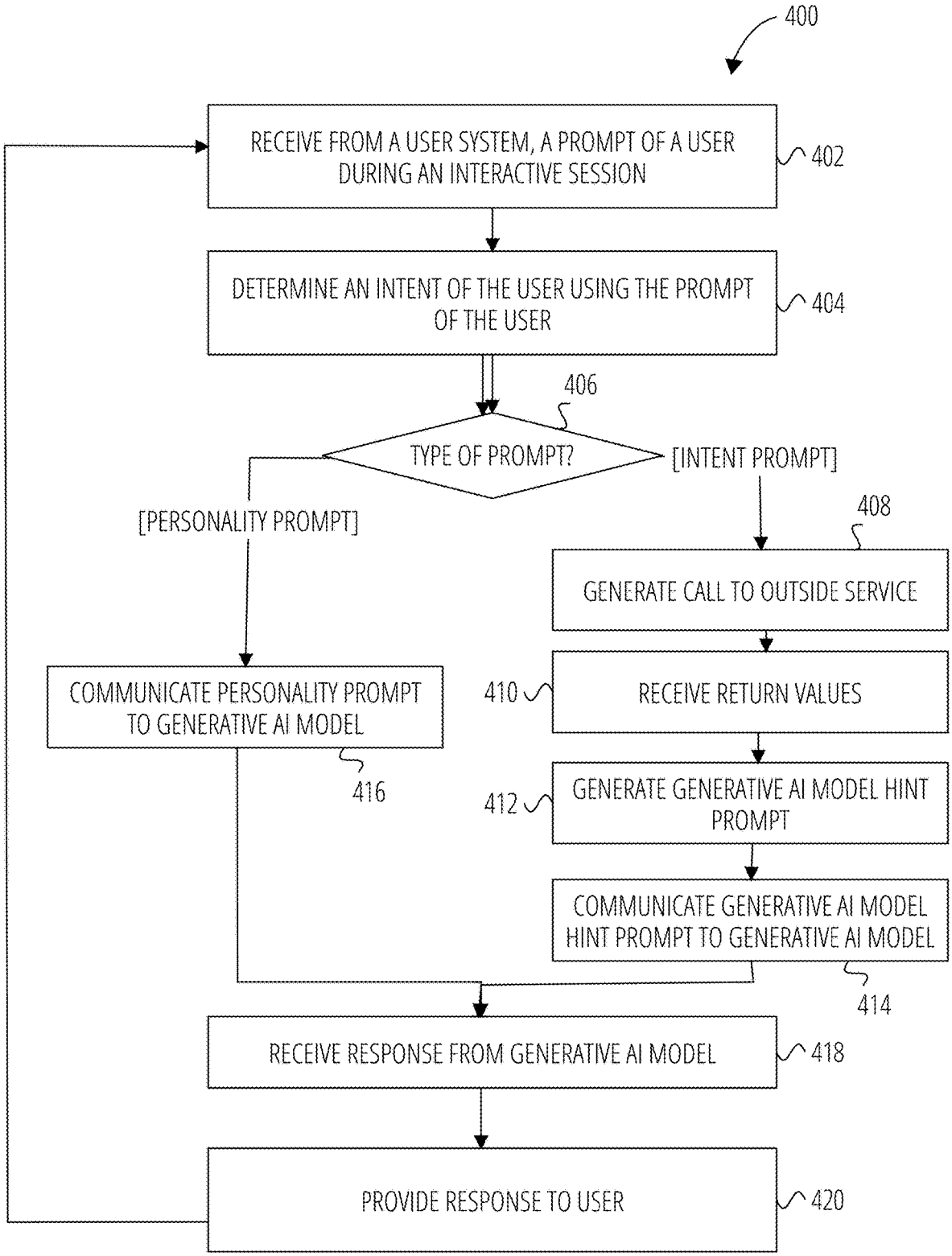
400
RECEIVE FROM A USER SYSTEM, A PROMPT OF A USER DURING AN INTERACTIVE SESSION
402
DETERMINE AN INTENT OF THE USER USING THE PROMPT OF THE USER
404
406
TYPE OF PROMPT?
[INTENT PROMPT]
[PERSONALITY PROMPT]
408
GENERATE CALL TO OUTSIDE SERVICE
COMMUNICATE PERSONALITY PROMPT TO GENERATIVE AI MODEL
410
RECEIVE RETURN VALUES
416
412
GENERATE GENERATIVE AI MODEL HINT PROMPT
COMMUNICATE GENERATIVE AI MODEL HINT PROMPT TO GENERATIVE AI MODEL
414
RECEIVE RESPONSE FROM GENERATIVE AI MODEL
418
PROVIDE RESPONSE TO USER
420

FIG. 4A

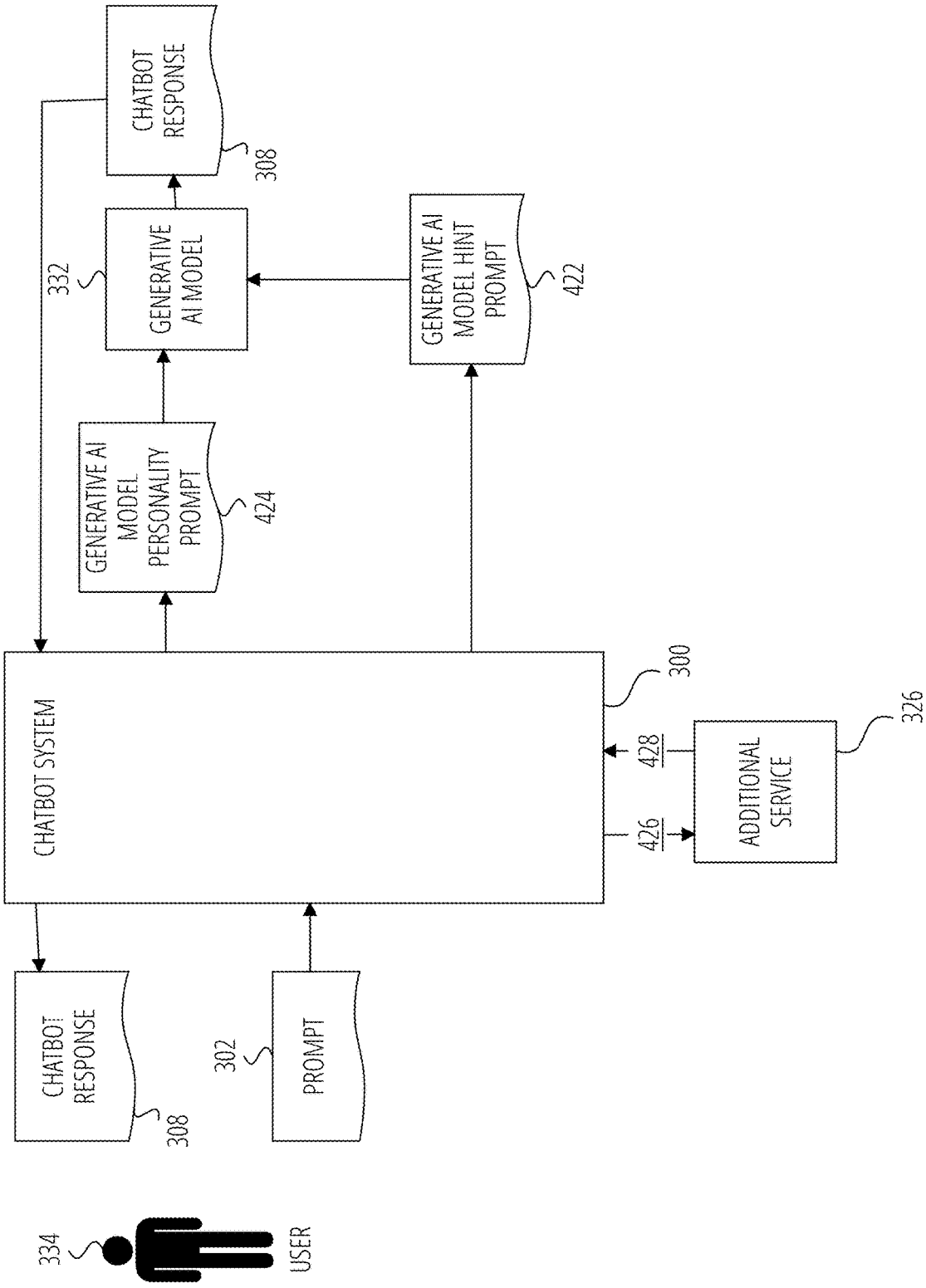
CHATBOT RESPONSE
308
332
GENERATIVE AI MODEL
GENERATIVE AI MODEL HINT PROMPT
422
GENERATIVE AI MODEL PERSONALITY PROMPT
424
CHATBOT SYSTEM
300
428
426
ADDITIONAL SERVICE
326
CHATBOT RESPONSE
308
302
PROMPT
334
USER

FIG. 4B

500

518

User Message Input	Chat History Input	Intent Output	Assistant Output
I'm hungry 502	508	None 504	What kind of food are you in the mood for? 506
Chinese 510	User: I'm hungry Assistant: What kind of food are you in the mood for? 512	call_api("snapchat_maps", {"city": "San Jose", "region": "California", "country": "USA", "keywords": "Chinese restaurant"}) intent: _maps 514	I recommend Fuji Huoshao & Dumpling for Chinese food. It's located at 1082 E Brokaw Rd, San Jose, CA 95131. 516

FIG. 5

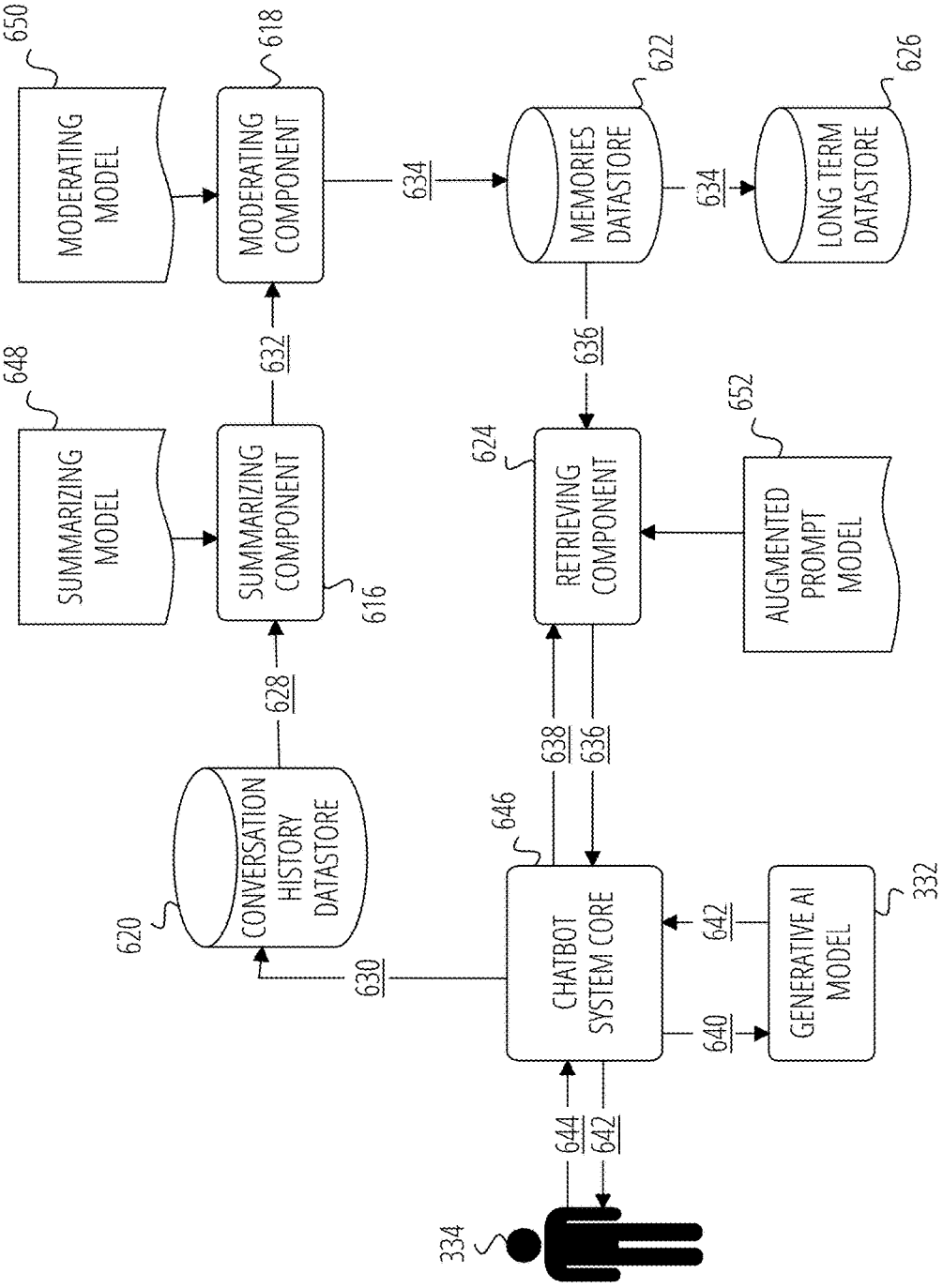
650
MODERATING MODEL
618
MODERATING COMPONENT
634
622
MEMORIES DATASTORE
634
626
LONG TERM DATASTORE
648
SUMMARIZING MODEL
632
SUMMARIZING COMPONENT
616
636
624
RETRIEVING COMPONENT
652
AUGMENTED PROMPT MODEL
628
638
636
620
CONVERSATION HISTORY DATASTORE
646
CHATBOT SYSTEM CORE
630
642
GENERATIVE AI MODEL
332
640
644
642
334

FIG. 6A

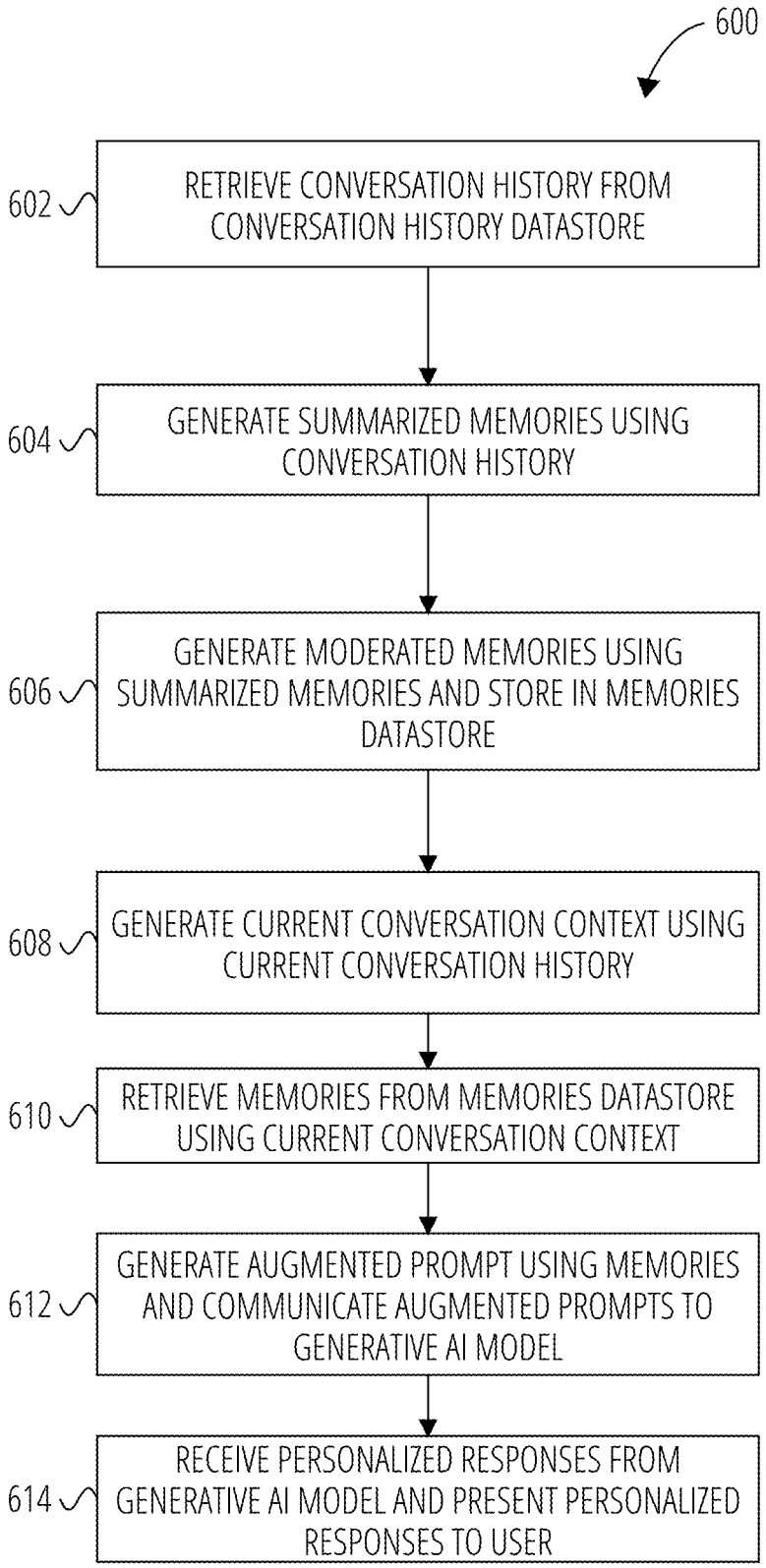
600
602
RETRIEVE CONVERSATION HISTORY FROM CONVERSATION HISTORY DATASTORE
604
GENERATE SUMMARIZED MEMORIES USING CONVERSATION HISTORY
606
GENERATE MODERATED MEMORIES USING SUMMARIZED MEMORIES AND STORE IN MEMORIES DATASTORE
608
GENERATE CURRENT CONVERSATION CONTEXT USING CURRENT CONVERSATION HISTORY
610
RETRIEVE MEMORIES FROM MEMORIES DATASTORE USING CURRENT CONVERSATION CONTEXT
612
GENERATE AUGMENTED PROMPT USING MEMORIES AND COMMUNICATE AUGMENTED PROMPTS TO GENERATIVE AI MODEL
614
RECEIVE PERSONALIZED RESPONSES FROM GENERATIVE AI MODEL AND PRESENT PERSONALIZED RESPONSES TO USER

FIG. 6B

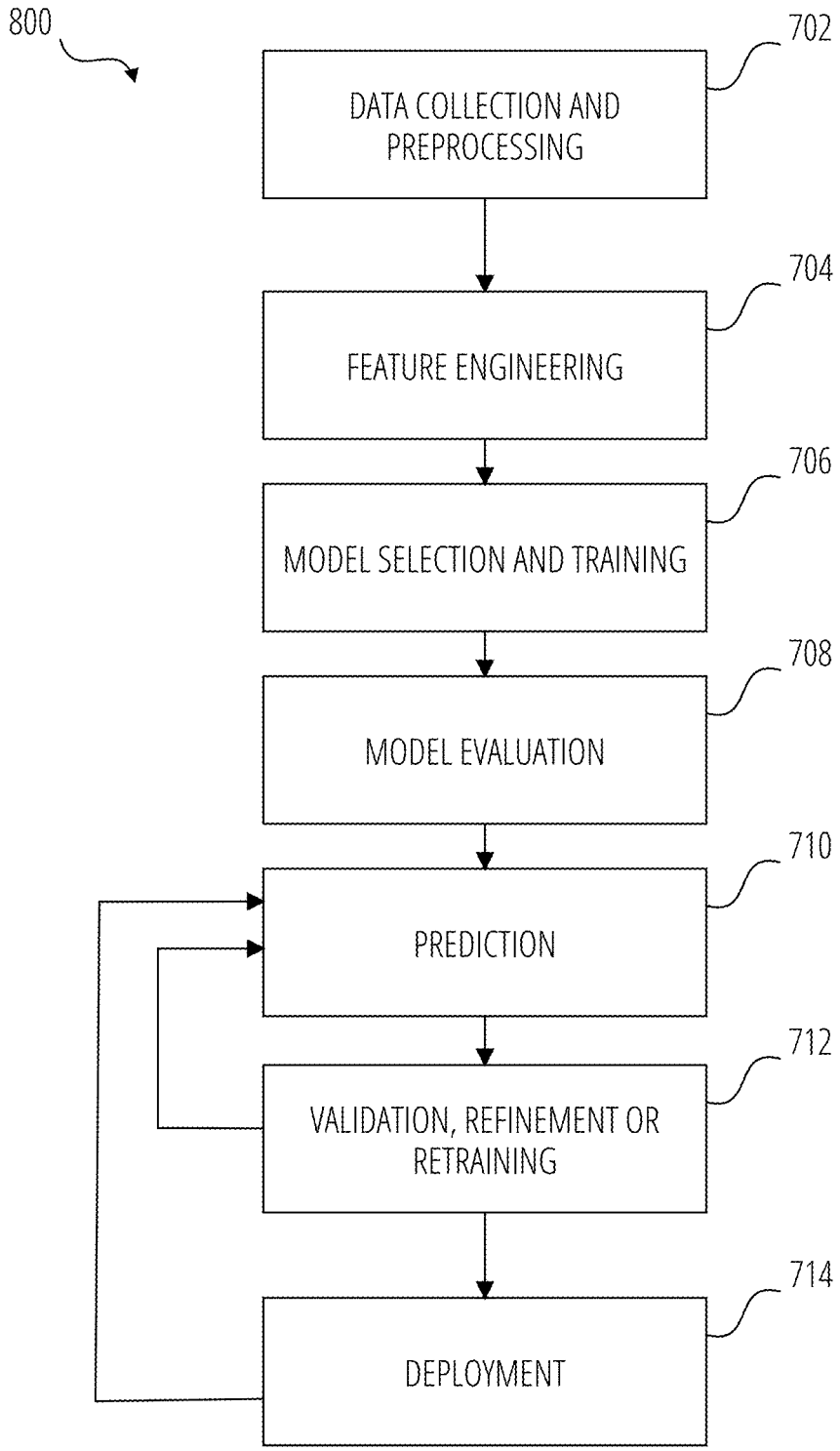
800
702
DATA COLLECTION AND PREPROCESSING
704
FEATURE ENGINEERING
706
MODEL SELECTION AND TRAINING
708
MODEL EVALUATION
710
PREDICTION
712
VALIDATION, REFINEMENT OR RETRAINING
714
DEPLOYMENT

FIG. 7

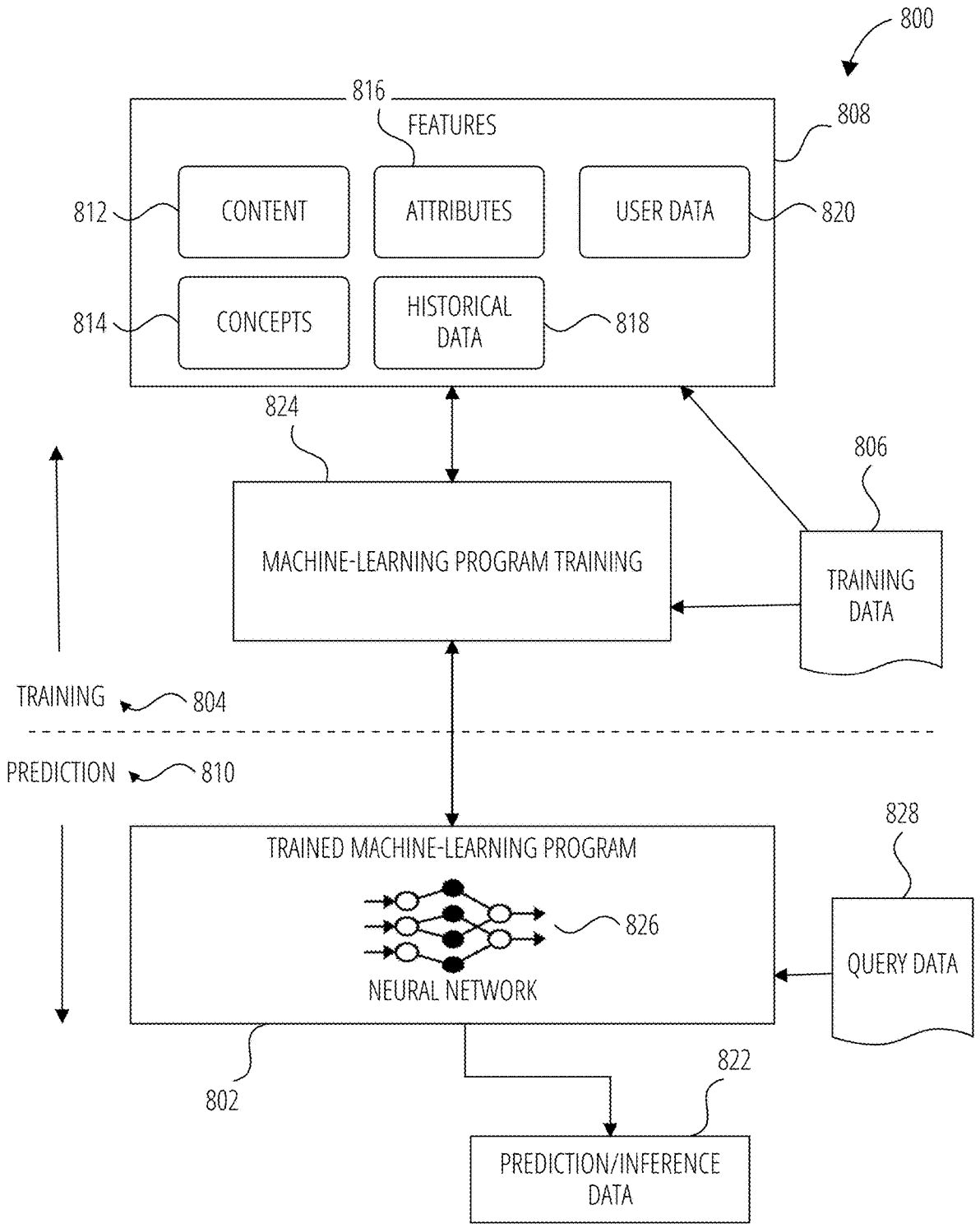
800
816
FEATURES
808
812
CONTENT
ATTRIBUTES
USER DATA
820
814
CONCEPTS
HISTORICAL DATA
818
824
806
MACHINE-LEARNING PROGRAM TRAINING
TRAINING DATA
TRAINING
804
PREDICTION
810
828
TRAINED MACHINE-LEARNING PROGRAM
826
NEURAL NETWORK
QUERY DATA
802
822
PREDICTION/INFERENCE DATA

FIG. 8

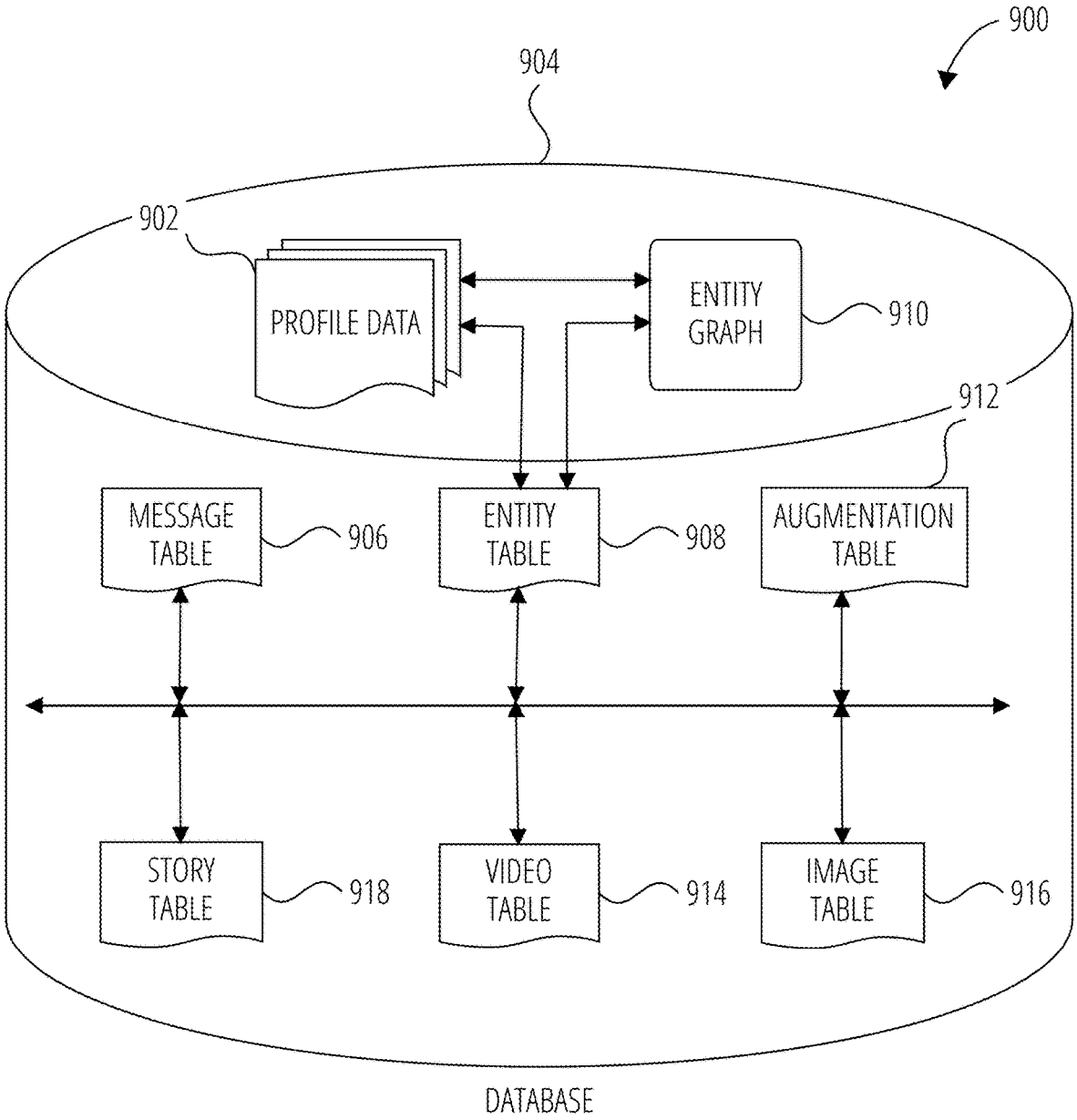
900
904
902
PROFILE DATA
ENTITY GRAPH
910
912
MESSAGE TABLE
906
ENTITY TABLE
908
AUGMENTATION TABLE
STORY TABLE
918
VIDEO TABLE
914
IMAGE TABLE
916
DATABASE

FIG. 9

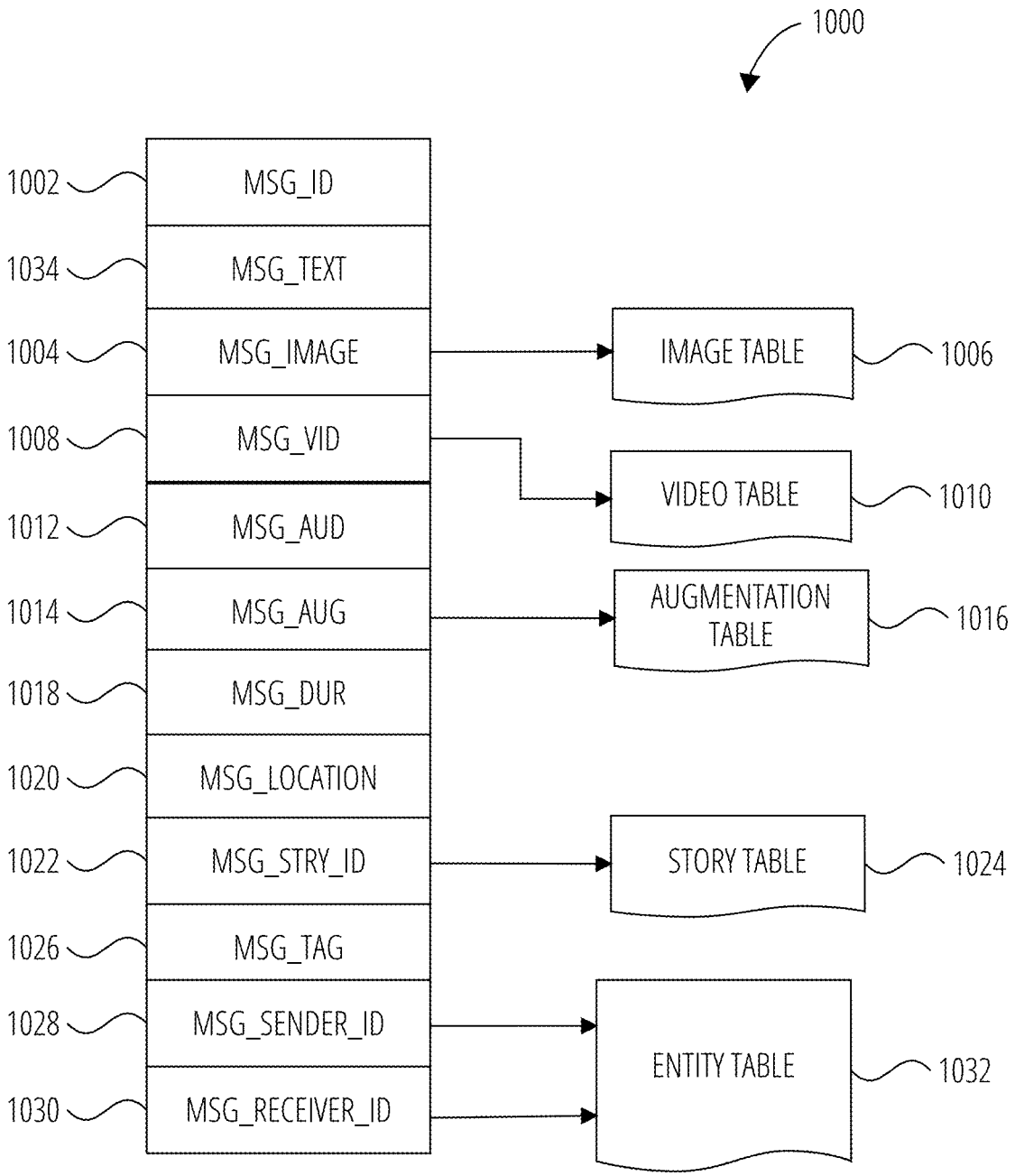
1000
1002
MSG_ID
1034
MSG_TEXT
1004
MSG_IMAGE
IMAGE TABLE
1006
1008
MSG_VID
VIDEO TABLE
1010
1012
MSG_AUD
1014
MSG_AUG
AUGMENTATION TABLE
1016
1018
MSG_DUR
1020
MSG_LOCATION
1022
MSG_STRY_ID
STORY TABLE
1024
1026
MSG_TAG
1028
MSG_SENDER_ID
ENTITY TABLE
1032
1030
MSG_RECEIVER_ID

FIG. 10

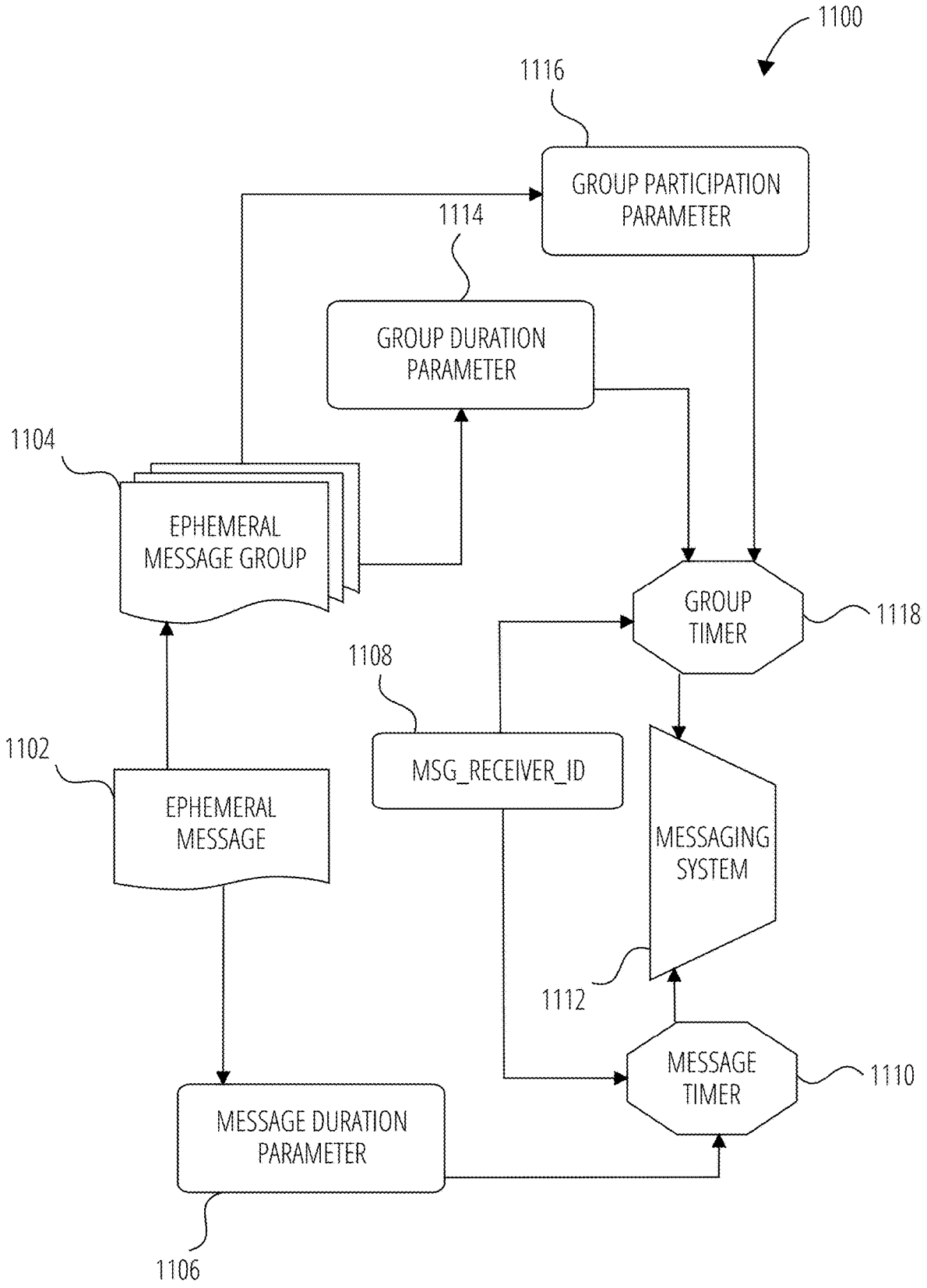
1100
1116
GROUP PARTICIPATION PARAMETER
1114
GROUP DURATION PARAMETER
1104
EPHEMERAL MESSAGE GROUP
GROUP TIMER
1118
1108
MSG_RECEIVER_ID
1102
EPHEMERAL MESSAGE
MESSAGING SYSTEM
1112
MESSAGE TIMER
1110
MESSAGE DURATION PARAMETER
1106

FIG. 11

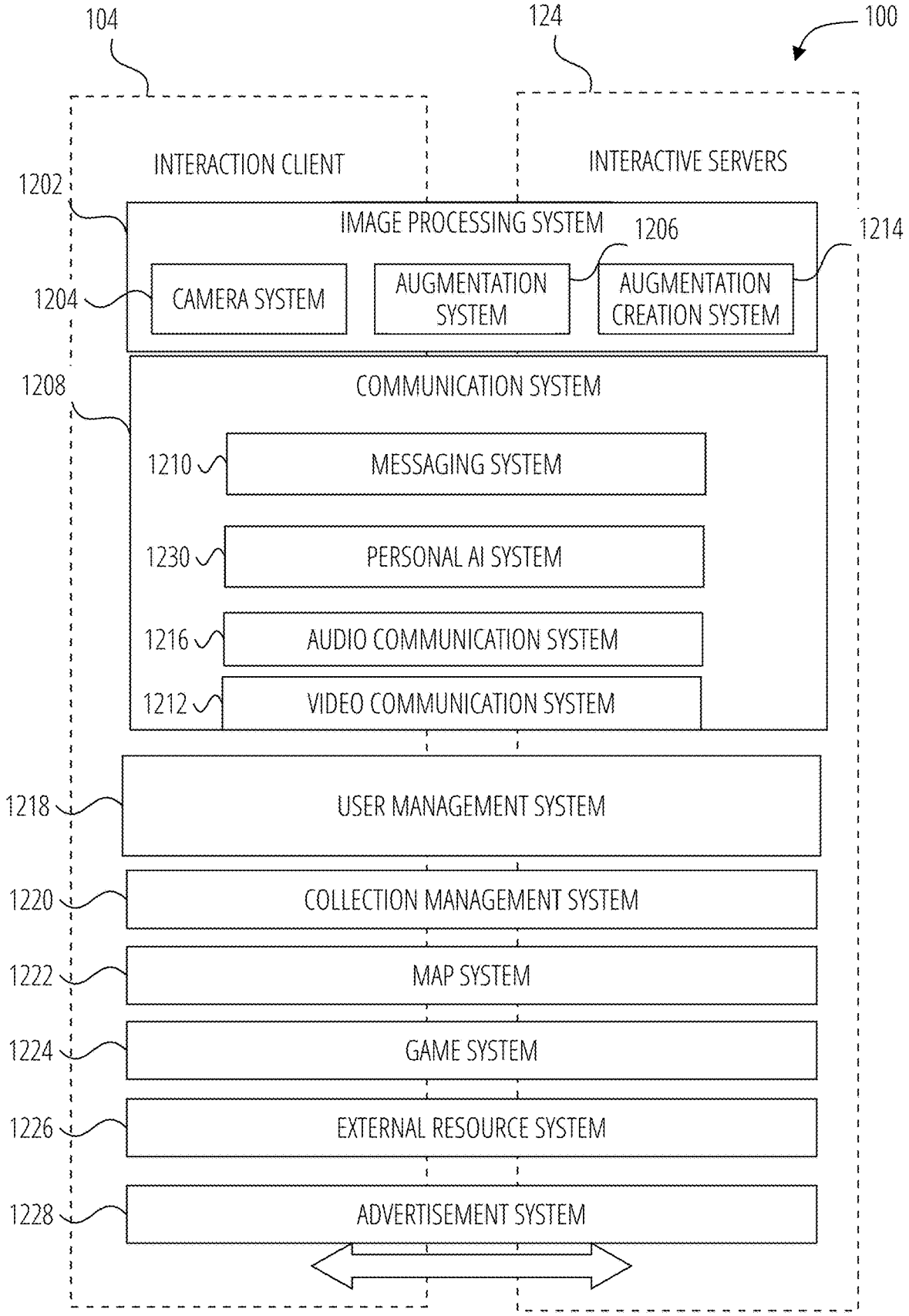
104
124
100
INTERACTION CLIENT
INTERACTIVE SERVERS
1202
IMAGE PROCESSING SYSTEM
1206
1214
1204
CAMERA SYSTEM
AUGMENTATION SYSTEM
AUGMENTATION CREATION SYSTEM
1208
COMMUNICATION SYSTEM
1210
MESSAGING SYSTEM
1230
PERSONAL AI SYSTEM
1216
AUDIO COMMUNICATION SYSTEM
1212
VIDEO COMMUNICATION SYSTEM
1218
USER MANAGEMENT SYSTEM
1220
COLLECTION MANAGEMENT SYSTEM
1222
MAP SYSTEM
1224
GAME SYSTEM
1226
EXTERNAL RESOURCE SYSTEM
1228
ADVERTISEMENT SYSTEM

FIG. 12

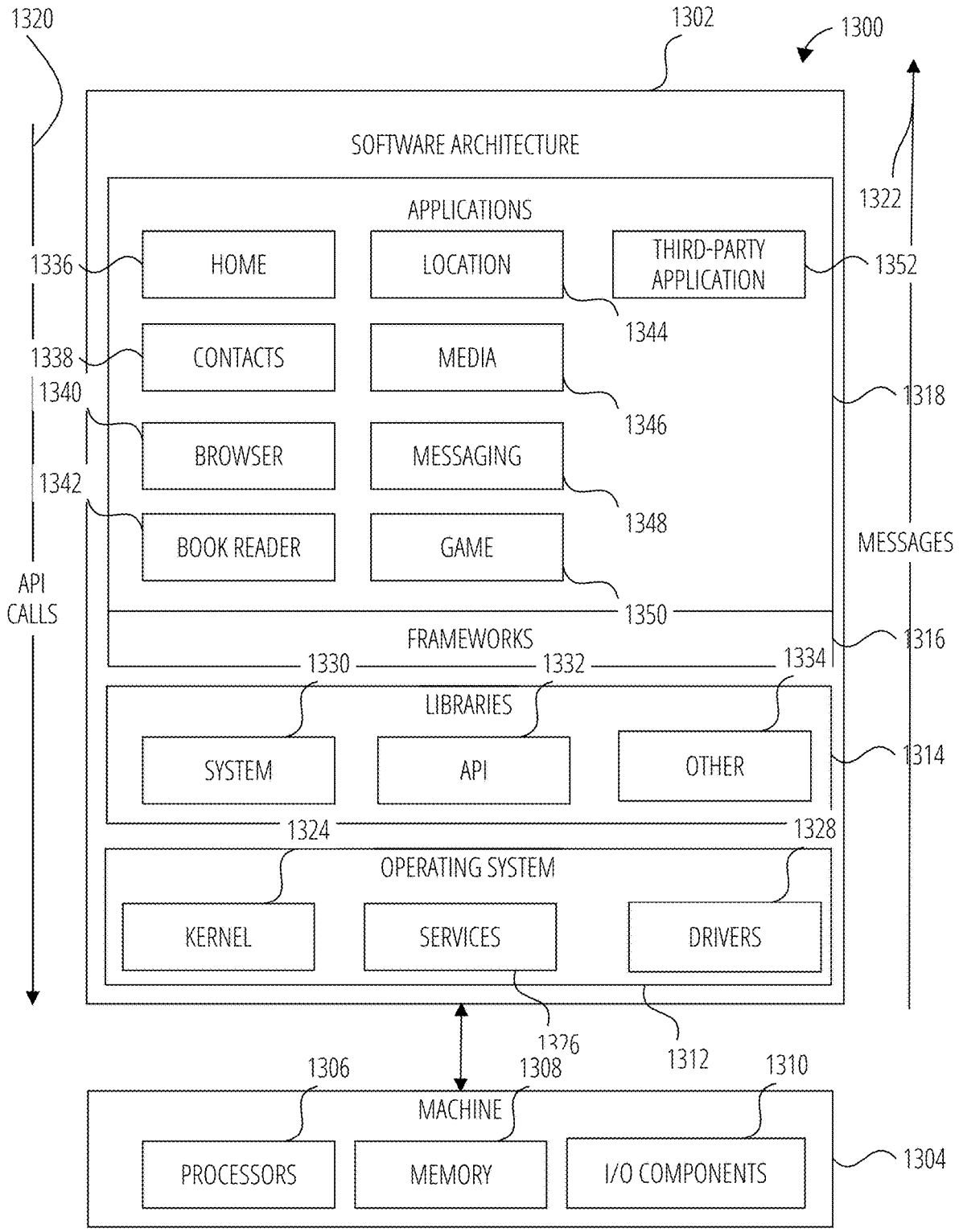
1320
1302
1300
SOFTWARE ARCHITECTURE
1322
APPLICATIONS
1336
HOME
LOCATION
THIRD-PARTY APPLICATION
1352
1344
1338
CONTACTS
MEDIA
1340
1318
1346
BROWSER
MESSAGING
1342
1348
BOOK READER
GAME
MESSAGES
API CALLS
1350
FRAMEWORKS
1316
1330
1332
1334
LIBRARIES
SYSTEM
API
OTHER
1314
1324
1328
OPERATING SYSTEM
KERNEL
SERVICES
DRIVERS
1326
1312
1306
1308
1310
MACHINE
PROCESSORS
MEMORY
I/O COMPONENTS
1304

FIG. 13

CHATBOT LONG-TERM MEMORY

CLAIM OF PRIORITY

[0001] This application claims the benefit of U.S. Provisional Patent Application Ser. No. 63/472,290, filed on Jun. 10, 2023, the benefit of priority of which is claimed hereby, and which is incorporated by reference herein in its entirety.

TECHNICAL FIELD

[0002] The present disclosure relates generally to interactive platforms and more particularly to providing interactive interfaces to users of an interactive platform.

BACKGROUND

[0003] Users enjoy accessing interactive platforms to share content with other users of the interactive platform. In addition, users often provide sensitive content when communicating with a chatbot.

BRIEF DESCRIPTION OF THE SEVERAL VIEWS OF THE DRAWINGS

[0004] In the drawings, which are not necessarily drawn to scale, like numerals may describe similar components in different views. To easily identify the discussion of any particular element or act, the most significant digit or digits in a reference number refer to the figure number in which that element is first introduced. Some non-limiting examples are illustrated in the figures of the accompanying drawings in which:

[0005] FIG. **1** is a diagrammatic representation of a networked environment in which the present disclosure may be deployed, according to some examples.

[0006] FIG. **2** is a diagrammatic representation of a machine in the form of a computer system within which a set of instructions may be executed to cause the machine to perform any one or more of the methodologies discussed herein, according to some examples.

[0007] FIG. **3** is a block diagram of a chatbot system in accordance with some examples.

[0008] FIG. **4**A is a process flow diagram of a generative AI model prompting method, in accordance with some examples.

[0009] FIG. **4**B is a collaboration diagram of the operations of a chatbot system, in accordance with some examples,

[0010] FIG. **5** is an illustration of a chat session between a user and a chatbot, in accordance with some examples.

[0011] FIG. **6**A is a collaboration diagram of components of a chatbot system, in accordance with some examples.

[0012] FIG. **6**B is an activity diagram of a conversation history method of a chatbot system, in accordance with some examples.

[0013] FIG. **7** illustrates a machine-learning pipeline, according to some examples.

[0014] FIG. **8** illustrates training and use of a machine-learning program, according to some examples.

[0015] FIG. **9** is a diagrammatic representation of a data structure as maintained in a database, according to some examples.

[0016] FIG. **10** is a diagrammatic representation of a message, according to some examples.

[0017] FIG. **11** is a flowchart for an access-limiting process, according to some examples.

[0018] FIG. **12** is a diagrammatic representation of a messaging system, according to some examples, that has both client-side and server-side functionality.

[0019] FIG. **13** is a block diagram showing a software architecture within which examples may be implemented.

DETAILED DESCRIPTION

[0020] Interactive platforms (e.g., interaction systems, social platforms, social media platforms, AR platforms, applications, messaging platforms, AR applications, operating systems, gaming systems or applications, systems with which a user interacts, and the like) may provide a way for users to interact with other users. For some users, interaction with an interaction system may be enhanced by having a chatbot to interact with. The chatbot can serve multiple uses, including providing a way for a user obtain information. The more accurate the information is, the more useful that information is to a user.

[0021] In some chatbots, a generative Artificial Intelligence (AI) model such as, but not limited to, a Large Language Model (LLM) or the like, used to perform Natural Language Generation (NLG) also performs personalization and memorizing of the generative AI model's responses to user prompts. This effect is achieved via the generative AI model's ability to remember users' personal information from previous conversations. However, outcomes can be unpredictable. For example, if users ask for movie recommendations right after telling a chatbot they like to watch comedy, the chatbot can recommend comedy movies. However, if there're some other irrelevant conversations in between, the generative AI model will quickly forget users' preference for comedy. Besides, upon every new session, knowledge from conversations in the last session will be completely forgotten. That is, there's no information persistence across multi-session chats. Solely relying on a generative AI model for memorizing, a provider of a chatbot lacks control over how long to memorize, and what to memorize. In addition, memorizing is not always desirable. Users might mention embarrassing incidents to a chatbot with no expectation that they're being remembered and referred to in the future as the chatbot provider may not control how the memorized information is used in current conversations.

[0022] In some examples, a chatbot system enables personalized responses. By retrieving and utilizing a user's conversation history and memories, the chatbot can generate more personalized and contextually relevant responses. This creates a more natural conversation flow.

[0023] In some examples, a chatbot system provides a persistent memory. The chatbot system summarizes and stores memories from past conversations in a persistent datastore. This allows the chatbot system to "remember" user facts, interests, and preferences over multiple sessions.

[0024] In some examples, a chatbot system features a controlled memory. The chatbot system moderates memories before storing memories to filter out unwanted content. A provider of an interactive platform hosting the chatbot system can control what is remembered. This prevents unpredictable responses.

[0025] In some examples, a chatbot system uses augmented prompting of a generative AI model. Using stored user memories, the chatbot system augments prompts to a generative AI model. This allows the model to leverage long-term user memory to improve responses.

[0026] In some examples, a chatbot system enables isolated memories. Memories are isolated per user or conversation group. One group's memories won't affect another's responses. This increases privacy for a user.

[0027] In some examples, a chatbot system provides for a deletable conversation history. Users can request deletion of their conversation history and associated memories. This gives users control over their data.

[0028] In some examples, a chatbot system provides improved scalability. Storing summarized memories allows the chatbot system to scale to long conversations while reducing compute costs compared to relying solely on a generative model.

[0029] In some examples, the chatbot system receives a user prompt from the user, determines a conversation history of one or more conversations between a user and a chatbot, generates an augmented prompt using the user prompt and the conversation history, communicates the augmented prompt to a generative AI model, receives a response from the generative AI model to the augmented prompt, and provides the response to the user.

[0030] In some examples, the chatbot system determines the conversation history by retrieving, from a conversation history datastore, a conversation history of one or more conversations between a user and a chatbot.

[0031] In some examples, the chatbot system generates one or more summarized memories using the conversation history.

[0032] In some examples, the chatbot system generates one or more moderated memories using the summarized memories and stores the one or more moderated memories into a memories datastore.

[0033] In some examples, the chatbot system receives a request from the user to delete the conversation history and in response to receiving the request, deletes the conversation history and one or more memories stored in the memories datastore associated with the conversation history.

[0034] In some examples, the chatbot system generates the augmented prompt by generating a current conversation context from a current conversation between the user and the chatbot, retrieving, from the memories datastore, one or more stored memories using the current conversation context, and generating the augmented prompt using the one or more stored memories.

[0035] In some examples, the one or more memories stored in the memories datastore are isolated for a first conversation group, and the one or more memories are not used by the chatbot system to generate the augmented prompt for a second conversation group.

[0036] In some examples, the methodologies described herein relate to a method of an interactive platform where the method includes: retrieving, by one or more processors, from a conversation history datastore, a conversation history of one or more conversations between a user and a chatbot; generating one or more summarized memories using the chat history; generating one or more moderated memories using the summarized memories; storing the one or more moderated memories into a memories datastore storing one or more memories; receiving a user prompt from the user; generating a current conversation context from a current conversation between the user and the chatbot; retrieving, by one or more processors, from the memories datastore, one or more memories using the current conversation context; generating an augmented prompt using the user prompt and the one or more memories; communicating the augmented prompt to a generative AI model; receiving a response from the generative AI model to the augmented prompt; and providing the response to the user.

[0037] In some examples, the methodologies described herein relate to a machine where the machine includes: one or more processors; and a memory storing instructions that, when executed by the one or more processors, cause the machine to perform operations including: retrieving from a conversation history datastore, a conversation history of one or more conversations between a user and a chatbot; generating one or more summarized memories using the chat history; generating one or more moderated memories using the summarized memories; storing the one or more moderated memories into a memories datastore storing one or more memories; receiving a user prompt from the user; generating a current conversation context from a current conversation between the user and the chatbot; retrieving, by one or more processors, from the memories datastore, one or more memories using the current conversation context; generating an augmented prompt using the user prompt and the one or more memories; communicating the augmented prompt to a generative AI model; receiving a response from the generative AI model to the augmented prompt; and providing the response to the user.

[0038] In some examples, the methodologies described herein relate to a machine-readable medium storing machine-executable instructions that, when executed by a machine, cause the machine to perform operations including: retrieving, by one or more processors, from a conversation history datastore, a conversation history of one or more conversations between a user and a chatbot; generating one or more summarized memories using the chat history; generating one or more moderated memories using the summarized memories; storing the one or more moderated memories into a memories datastore storing one or more memories; receiving a user prompt from the user; generating a current conversation context from a current conversation between the user and the chatbot; retrieving, by one or more processors, from the memories datastore, one or more memories using the current conversation context; generating an augmented prompt using the user prompt and the one or more memories; communicating the augmented prompt to a generative AI model; receiving a response from the generative AI model to the augmented prompt; and providing the response to the user.

[0039] Other technical features may be readily apparent to one skilled in the art from the following figures, and descriptions.

Networked Computing Environment

[0040] FIG. **1** is a block diagram showing an example interactive platform **100** including one or more interaction components for facilitating interactions (e.g., exchanging text messages, conducting text audio and video calls, or playing games) over a network. The interactive platform **100** includes multiple user systems **102**, each of which hosts multiple applications, including an interaction client **104** and other applications **106**. Each interaction client **104** is communicatively coupled, via one or more communication networks including a network **108** (e.g., the Internet), to other instances of the interaction client **104** (e.g., hosted on respective other user systems **102**), an interactive server system **110** and third-party servers **112**). An interaction

client **104** can also communicate with locally hosted applications **106** using Applications Program Interfaces (APIs).

[0041] Each user system **102** may include multiple user devices, such as a mobile device **114**, head-wearable apparatus **116**, and a computer user device **118** that are communicatively connected to exchange data and messages.

[0042] An interaction client **104** interacts with other interaction clients **104** and with the interactive server system **110** via the network **108**. The data exchanged between the interaction clients **104** (e.g., interactions **120**) and between the interaction clients **104** and the interactive server system **110** includes functions (e.g., commands to invoke functions) and payload data (e.g., text, audio, video, or other multimedia data).

[0043] The interactive server system **110** provides server-side functionality via the network **108** to the interaction clients **104**. While certain functions of the interactive platform **100** are described herein as being performed by either an interaction client **104** or by the interactive server system **110**, the location of certain functionality either within the interaction client **104** or the interactive server system **110** may be a design choice. For example, it may be technically preferable to initially deploy particular technology and functionality within the interactive server system **110** but to later migrate this technology and functionality to the interaction client **104** where a user system **102** has sufficient processing capacity.

[0044] The interactive server system **110** supports various services and operations that are provided to the interaction clients **104**. Such operations include transmitting data to, receiving data from, and processing data generated by the interaction clients **104**. This data may include message content, user device information, geolocation information, media augmentation and overlays, message content persistence conditions, interactive platform information, and live event information. Data exchanges within the interactive platform **100** are invoked and controlled through functions available via user interfaces (UIs) of the interaction clients **104**.

[0045] Turning now specifically to the interactive server system **110**, an API server **122** is coupled to and provides programmatic interfaces to Interactive servers **124**, making the functions of the Interactive servers **124** accessible to interaction clients **104**, other applications **106** and third-party server **112**. The Interactive servers **124** are communicatively coupled to a database server **126**, facilitating access to a database **128** that stores data associated with interactions processed by the Interactive servers **124**. Similarly, a web server **130** is coupled to the Interactive servers **124** and provides web-based interfaces to the Interactive servers **124**. To this end, the web server **130** processes incoming network requests over the Hypertext Transfer Protocol (HTTP) and several other related protocols.

[0046] The API server **122** receives and transmits interaction data (e.g., commands and message payloads) between the Interactive servers **124** and the user systems **102** (and, for example, interaction clients **104** and other application **106**) and the third-party server **112**. Specifically, the API server **122** provides a set of interfaces (e.g., routines and protocols) that can be called or queried by the interaction client **104** and other applications **106** to invoke functionality of the Interactive servers **124**. The API server **122** exposes various functions supported by the Interactive servers **124**, including account registration; login functionality; the sending of interaction data, via the Interactive servers **124**, from a particular interaction client **104** to another interaction client **104**; the communication of media files (e.g., images or video) from an interaction client **104** to the Interactive servers **124**; the settings of a collection of media data (e.g., a story); the retrieval of a list of friends of a user of a user system **102**; the retrieval of messages and content; the addition and deletion of entities (e.g., friends) to an entity graph (e.g., a social graph); the location of friends within a social graph; and opening an application event (e.g., relating to the interaction client **104**).

[0047] The Interactive servers **124** host multiple systems and subsystems, described below with reference to FIG. **12**.

Linked Applications

[0048] Returning to the interaction client **104**, features and functions of an external resource (e.g., a linked application **106** or applet) are made available to a user via an interface of the interaction client **104**. In this context, "external" refers to the fact that the application **106** or applet is external to the interaction client **104**. The external resource is often provided by a third party but may also be provided by the creator or provider of the interaction client **104**. The interaction client **104** receives a user selection of an option to launch or access features of such an external resource. The external resource may be the application **106** installed on the user system **102** (e.g., a "native app"), or a small-scale version of the application (e.g., an "applet") that is hosted on the user system **102** or remote of the user system **102** (e.g., on third-party servers **112**). The small-scale version of the application includes a subset of features and functions of the application (e.g., the full-scale, native version of the application) and is implemented using a markup-language document. In some examples, the small-scale version of the application (e.g., an "applet") is a web-based, markup-language version of the application and is embedded in the interaction client **104**. In addition to using markup-language documents (e.g., a .*ml file), an applet may incorporate a scripting language (e.g., a .*js file or a .json file) and a style sheet (e.g., a .*ss file).

[0049] In response to receiving a user selection of the option to launch or access features of the external resource, the interaction client **104** determines whether the selected external resource is a web-based external resource or a locally-installed application **106**. In some cases, applications **106** that are locally installed on the user system **102** can be launched independently of and separately from the interaction client **104**, such as by selecting an icon corresponding to the application **106** on a home screen of the user system **102**. Small-scale versions of such applications can be launched or accessed via the interaction client **104** and, in some examples, no or limited portions of the small-scale application can be accessed outside of the interaction client **104**. The small-scale application can be launched by the interaction client **104** receiving, from a third-party server **112** for example, a markup-language document associated with the small-scale application and processing such a document.

[0050] In response to determining that the external resource is a locally-installed application **106**, the interaction client **104** instructs the user system **102** to launch the external resource by executing locally-stored code corresponding to the external resource. In response to determining that the external resource is a web-based resource, the

interaction client **104** communicates with the third-party servers **112** (for example) to obtain a markup-language document corresponding to the selected external resource. The interaction client **104** then processes the obtained markup-language document to present the web-based external resource within a user interface of the interaction client **104**.

[0051] The interaction client **104** can notify a user of the user system **102**, or other users related to such a user (e.g., "friends"), of activity taking place in one or more external resources. For example, the interaction client **104** can provide participants in a conversation (e.g., a chat session) in the interaction client **104** with notifications relating to the current or recent use of an external resource by one or more members of a group of users. One or more users can be invited to join in an active external resource or to launch a recently-used but currently inactive (in the group of friends) external resource. The external resource can provide participants in a conversation, each using respective interaction clients **104**, with the ability to share an item, status, state, or location in an external resource in a chat session with one or more members of a group of users. The shared item may be an interactive chat card with which members of the chat can interact, for example, to launch the corresponding external resource, view specific information within the external resource, or take the member of the chat to a specific location or state within the external resource. Within a given external resource, response messages can be sent to users on the interaction client **104**. The external resource can selectively include different media items in the responses, based on a current context of the external resource.

[0052] The interaction client **104** can present a list of the available external resources (e.g., applications **106** or applets) to a user to launch or access a given external resource. This list can be presented in a context-sensitive menu. For example, the icons representing different ones of the application **106** (or applets) can vary based on how the menu is launched by the user (e.g., from a conversation interface or from a non-conversation interface).

Machine Architecture

[0053] FIG. **2** is a diagrammatic representation of the machine **200** within which instructions **202** (e.g., software, a program, an application, an applet, an app, or other executable code) for causing the machine **200** to perform any one or more of the methodologies discussed herein may be executed. For example, the instructions **202** may cause the machine **200** to execute any one or more of the methods described herein. The instructions **202** transform the general, non-programmed machine **200** into a particular machine **200** programmed to carry out the described and illustrated functions in the manner described. The machine **200** may operate as a standalone device or may be coupled (e.g., networked) to other machines. In a networked deployment, the machine **200** may operate in the capacity of a server machine or a client machine in a server-client network environment, or as a peer machine in a peer-to-peer (or distributed) network environment. The machine **200** may include, but not be limited to, a server computer, a client computer, a personal computer (PC), a tablet computer, a laptop computer, a netbook, a set-top box (STB), a personal digital assistant (PDA), an entertainment media system, a cellular telephone, a smartphone, a mobile device, a wearable device (e.g., a smartwatch), a smart home device (e.g., a smart appliance), other smart devices, a web appliance, a network router, a network switch, a network bridge, or any machine capable of executing the instructions **202**, sequentially or otherwise, that specify actions to be taken by the machine **200**. Further, while a single machine **200** is illustrated, the term "machine" shall also be taken to include a collection of machines that individually or jointly execute the instructions **202** to perform any one or more of the methodologies discussed herein. The machine **200**, for example, may include the user system **102** or any one of multiple server devices forming part of the interactive server system **110**. In some examples, the machine **200** may also include both client and server systems, with certain operations of a particular method or algorithm being performed on the server-side and with certain operations of the particular method or algorithm being performed on the client-side.

[0054] The machine **200** may include processors **204**, memory **206**, and input/output I/O components **208**, which may be configured to communicate with each other via a bus **210**. In an example, the processors **204** (e.g., a Central Processing Unit (CPU), a Reduced Instruction Set Computing (RISC) Processor, a Complex Instruction Set Computing (CISC) Processor, a Graphics Processing Unit (GPU), a Digital Signal Processor (DSP), an Application Specific Integrated Circuit (ASIC), a Radio-Frequency Integrated Circuit (RFIC), another processor, or any suitable combination thereof) may include, for example, a processor **212** and a processor **214** that execute the instructions **202**. The term "processor" is intended to include multi-core processors that may include two or more independent processors (sometimes referred to as "cores") that may execute instructions contemporaneously. Although FIG. **2** shows multiple processors **204**, the machine **200** may include a single processor with a single-core, a single processor with multiple cores (e.g., a multi-core processor), multiple processors with a single core, multiple processors with multiples cores, or any combination thereof.

[0055] The memory **206** includes a main memory **216**, a static memory **218**, and a storage unit **220**, both accessible to the processors **204** via the bus **210**. The main memory **216**, the static memory **218**, and storage unit **220** store the instructions **202** embodying any one or more of the methodologies or functions described herein. The instructions **202** may also reside, completely or partially, within the main memory **216**, within the static memory **218**, within machine-readable medium **222** within the storage unit **220**, within at least one of the processors **204** (e.g., within the processor's cache memory), or any suitable combination thereof, during execution thereof by the machine **200**.

[0056] The I/O components **208** may include a wide variety of components to receive input, provide output, produce output, transmit information, exchange information, capture measurements, and so on. The specific I/O components **208** that are included in a particular machine will depend on the type of machine. For example, portable machines such as mobile phones may include a touch input device or other such input mechanisms, while a headless server machine will likely not include such a touch input device. It will be appreciated that the I/O components **208** may include many other components that are not shown in FIG. **2**. In various examples, the I/O components **208** may include user output components **224** and user input components **226**. The user output components **224** may include visual components (e.g., a display such as a plasma display

panel (PDP), a light-emitting diode (LED) display, a liquid crystal display (LCD), a projector, or a cathode ray tube (CRT)), acoustic components (e.g., speakers), haptic components (e.g., a vibratory motor, resistance mechanisms), other signal generators, and so forth. The user input components **226** may include alphanumeric input components (e.g., a keyboard, a touch screen configured to receive alphanumeric input, a photo-optical keyboard, or other alphanumeric input components), point-based input components (e.g., a mouse, a touchpad, a trackball, a joystick, a motion sensor, or another pointing instrument), tactile input components (e.g., a physical button, a touch screen that provides location and force of touches or touch gestures, or other tactile input components), audio input components (e.g., a microphone), and the like.

[0057] In further examples, the I/O components **208** may include biometric components **228**, motion components **230**, environmental components **232**, or position components **234**, among a wide array of other components. For example, the biometric components **228** include components to detect expressions (e.g., hand expressions, facial expressions, vocal expressions, body gestures, or eye-tracking), measure biosignals (e.g., blood pressure, heart rate, body temperature, perspiration, or brain waves), identify a person (e.g., voice identification, retinal identification, facial identification, fingerprint identification, or electroencephalogram-based identification), and the like. The motion components **230** include acceleration sensor components (e.g., accelerometer), gravitation sensor components, rotation sensor components (e.g., gyroscope). The biometric components may include a brain-machine interface (BMI) system that allows communication between the brain and an external device or machine. This is achieved by recording brain activity, translating it into a format that can be understood by a computer, and then using the resulting signals to control the device or machine. Example types of BMI technologies, include, but are not limited to:

[0058] Electroencephalography (EEG) based BMIs, which record electrical activity in the brain using electrodes placed on the scalp.

[0059] Invasive BMIs, which involve surgically implanting electrodes directly into the brain.

[0060] Optogenetics BMIs, which use light to control the activity of specific nerve cells in the brain.

[0061] Functional magnetic resonance imaging (fMRI)-based BMIs, which use magnetic fields to measure blood flow in the brain, which can be used to infer brain activity.

[0062] Any BMI data collected by an interactive platform is captured and stored with only user approval and deleted on user request. Further, such data may be used for very limited purposes, such as identity verification or user input. To ensure limited and authorized use of BMI data and other personally identifiable information (PII), access to this BMI data is restricted to authorized personnel only, if at all. Any use of BMI data may strictly be limited to a designated purpose, and the BMI data is not shared or sold to any third party without the explicit consent of the user. In addition, appropriate technical and organizational measures are implemented to ensure the security and confidentiality of this sensitive information.

[0063] The environmental components **232** include, for example, one or more cameras (with still image/photograph and video capabilities), illumination sensor components (e.g., photometer), temperature sensor components (e.g., one or more thermometers that detect ambient temperature), humidity sensor components, pressure sensor components (e.g., barometer), acoustic sensor components (e.g., one or more microphones that detect background noise), proximity sensor components (e.g., infrared sensors that detect nearby objects), gas sensors (e.g., gas detection sensors to detection concentrations of hazardous gases for safety or to measure pollutants in the atmosphere), or other components that may provide indications, measurements, or signals corresponding to a surrounding physical environment.

[0064] With respect to cameras, the user system **102** may have a camera system including, for example, front cameras on a front surface of the user system **102** and rear cameras on a rear surface of the user system **102**. The front cameras may, for example, be used to capture still images and video of a user of the user system **102** (e.g., "selfies"), which may then be augmented with augmentation data (e.g., filters) described above. The rear cameras may, for example, be used to capture still images and videos in a more traditional camera mode, with these images similarly being augmented with augmentation data. In addition to front and rear cameras, the user system **102** may also include a 360° camera for capturing 360° photographs and videos.

[0065] Further, the camera system of the user system **102** may include dual rear cameras (e.g., a primary camera as well as a depth-sensing camera), or even triple, quad or penta rear camera configurations on the front and rear sides of the user system **102**. These multiple cameras systems may include a wide camera, an ultra-wide camera, a telephoto camera, a macro camera, and a depth sensor, for example.

[0066] The position components **234** include location sensor components (e.g., a GPS receiver component), altitude sensor components (e.g., altimeters or barometers that detect air pressure from which altitude may be derived), orientation sensor components (e.g., magnetometers), and the like.

[0067] Communication may be implemented using a wide variety of technologies. The I/O components **208** further include communication components **236** operable to couple the machine **200** to a network **238** or devices **240** via respective coupling or connections. For example, the communication components **236** may include a network interface component or another suitable device to interface with the network **238**. In further examples, the communication components **236** may include wired communication components, wireless communication components, cellular communication components, Near Field Communication (NFC) components, Bluetooth® components (e.g., Bluetooth® Low Energy), Wi-Fi® components, and other communication components to provide communication via other modalities. The devices **240** may be another machine or any of a wide variety of peripheral devices (e.g., a peripheral device coupled via a USB).

[0068] Moreover, the communication components **236** may detect identifiers or include components operable to detect identifiers. For example, the communication components **236** may include Radio Frequency Identification (RFID) tag reader components, NFC smart tag detection components, optical reader components (e.g., an optical sensor to detect one-dimensional bar codes such as Universal Product Code (UPC) bar code, multi-dimensional bar codes such as Quick Response (QR) code, Aztec code, Data Matrix, Dataglyph, MaxiCode, PDF417, Ultra Code, UCC RSS-2D bar code, and other optical codes), or acoustic

detection components (e.g., microphones to identify tagged audio signals). In addition, a variety of information may be derived via the communication components **236**, such as location via Internet Protocol (IP) geolocation, location via Wi-Fi® signal triangulation, location via detecting an NFC beacon signal that may indicate a particular location, and so forth.

[0069] The various memories (e.g., main memory **216**, static memory **218**, and memory of the processors **204**) and storage unit **220** may store one or more sets of instructions and data structures (e.g., software) embodying or used by any one or more of the methodologies or functions described herein. These instructions (e.g., the instructions **202**), when executed by processors **204**, cause various operations to implement the disclosed examples.

[0070] The instructions **202** may be transmitted or received over the network **238**, using a transmission medium, via a network interface device (e.g., a network interface component included in the communication components **236**) and using any one of several well-known transfer protocols (e.g., hypertext transfer protocol (HTTP)). Similarly, the instructions **202** may be transmitted or received using a transmission medium via a coupling (e.g., a peer-to-peer coupling) to the devices **240**.

[0071] FIG. **3** is a block diagram of a chatbot system **300**, in accordance with some examples. A chatbot system **300** is conducts a chat session with a user **334** during an interactive session.

[0072] In some examples, the chatbot system **300** is a software platform designed to simulate human conversation through voice commands or text chats. The chatbot system **300** may employ natural language processing (NLP) and machine learning (ML)/artificial intelligence methodologies to understand and interpret the input of the user **334** and generate a chatbot response **308**.

[0073] In some examples, the chatbot's architecture includes one or more natural language understanding (NLU) components, such as NLU component **312**, and one or more dialogue management components, such as dialogue management component **310**. The NLU component **312** is responsible for understanding an intent **320** of the user **334** and extracting relevant information from the input of the user, such as prompt **302**. This is achieved by analyzing the prompt **302** and mapping it to an intent. The NLU component **312** can use various methodologies such as rule-based systems, statistical models, LLMs, neural networks, and the like to understand the input of the user. The dialogue management component **310** generates a chatbot response **308** to the input of the user. The dialogue management component **310** uses the intent **320** and any extracted information from the NLU component **312** to determine the appropriate chatbot response **308**. This can be done using rule-based systems, decision trees, statistical models, LLMs, neural networks, and the like. In some examples, the NLU component **312** and the dialogue management component **310** are a single component.

[0074] Once the NLU component **312** extracts the relevant information from the prompt **302** as an intent **320** of the user **334**, the dialogue management component **310** receives an appropriate chatbot response **308**. The dialogue management component **310** generates responses in a human-like manner by using methodologies such as, but not limited to, text generation and machine learning models.

[0075] In some examples, either the NLU component **312** or the dialogue management component **310** may use a generative AI model **332** to improve their natural language understanding and dialogue management capabilities. For example, the NLU component **312** uses the generative AI model **332** to analyze the input of the user and extract relevant information, such as the intent of the user and entities. The dialogue management component **310** can also use the generative AI model **332** to identify and extract important information from unstructured text, such as a question of the user or a request. This can be done using methodologies such as named entity recognition, part-of-speech tagging, sentiment analysis, and the like. In some examples, the NLU component **312** communicates the prompt **302** directly to the generative AI model **332**. The generative AI model **332** receives the prompt **302** and generates the chatbot response **308**. In a similar manner, the dialogue management component **310** may receive the intent **320** and generate a generative AI model prompt that is communicated to the generative AI model **332**. The generative AI model **332** receives the generative AI model prompt and generates the chatbot response **308**.

[0076] FIG. **4**A is a process flow diagram of a generative AI model prompting method and FIG. **4**B is a collaboration diagram of the operations of a chatbot system, in accordance with some examples. A chatbot system, such as chatbot system **300** (of FIG. **3**), uses a generative AI prompting method **400** to generate personality prompts and hint prompts for a generative AI model **332** (of FIG. **3**).

[0077] In operation **402**, the chatbot system **300** receives, via a user system **306** (of FIG. **3**), a prompt **302** of a user **334** during an interactive session. For example, the user **334** uses user system **306** to access an interactive platform that hosts the chatbot system **300**. The user **334** enters a prompt **302** into the user system **306** and the user system **306** communicates the prompt **302** to the chatbot system **300**. In some examples, the prompt **302** may include other types of data as well as text such as, but not limited to, image data, video data, audio data, electronic documents, links to data stored on the Internet or the user system **306**, and the like. In addition, the prompt **302** may include media such as, but not limited to, audio media, image media, video media, textual media, and the like. Regardless of the data type of the prompt **302**, keyword attribution and expansion may be used to automatically generate a cluster of keywords or attributes that are associated with the received prompt **302**. For example, image recognition may be deployed to identify objects and location associated with visual media and image data and to generate a keyword cluster or cloud that is then associated with the image-based prompt.

[0078] The prompt **302** may furthermore be received through any number of interfaces and I/O components (e.g., the I/O components **208**) of a user system **102**. These include gesture-based inputs obtained from a biometric component and inputs received via a Brain-Computer Interface (BCI).

[0079] In some examples, the chatbot system **300** is integrated into various platforms such as, but not limited to, websites, messaging apps, and mobile apps, allowing users to interact with it through text or voice commands.

[0080] In operation **404**, the chatbot system **300** determines an intent **320** (of FIG. **3**) of the user **334** using the user prompt **302**. For example, an NLU component **312** (of FIG. **3**) receives the prompt **302** and any user feedback **316** including follow up messages from the user **334** and uses an

intent processing pipeline to determine the intent **320**. This pipeline uses Natural Language Processing (NLP) methodologies to map sets of conversations to a bag of intentful keywords and concepts. In addition to the keywords that are used in the original prompt **302**, stemmed keywords and expanded concepts are also generated. The platform also assigns a weight to each concept based on the importance of those in the conversation. These keywords and concepts are aggregated and mapped to the user **334** as part of an intent profile or intent vector having weighted keywords and concepts based on the importance of those in the conversation.

[0081] In some examples, the chatbot system **300** associates a time factor to a keyword or concept where the time factor decays in time. For example, the chatbot system **300** attaches a time factor to the keywords and concepts, which indicates how fresh that concept should be used for targeting and bidding. For example, "Hotels in Cancun for spring break" vs "Planning for wedding next year" will have two different decaying factors. In some examples, the chatbot system **300** applies a time factor to a conversation state.

[0082] In some examples, an overall intent of the user is built using various signals or data such as user demographics, location, device, engagement with organic surfaces that are user interface and service features provided by the interactive server system of an interactive platform application and consumption patterns, and overall friend-graph proximity carrier signals or data that may be discernable from the user's affiliation with the interactive platform.

[0083] In some examples, the intent vector is an additional dimension that will be used to refresh and update an intent profile stored in a user profile **314** (of FIG. **3**).

[0084] In some examples, the chatbot system **300** uses the user profile **314** that includes interactive platform user data **324** (of FIG. **3**) of the user **334** to determine an intent of the user.

[0085] In some examples, the NLU component **312** (of FIG. **3**) uses artificial intelligence methodologies including Machine Learning (ML) models to generate the intent **320**. The chatbot system **300** uses the data on intent of the user and conversation context to improve its responses and optimization capabilities over time by ingesting the feedback. The chatbot system **300** collects engagement of the user **334** on ads, organic surfaces, and features of the interactive platforming system and also responses to the chatbot system **300** itself and feeds that into the NLU component **312**. Accordingly, the chatbot system **300** can finetune or further pre-train the ML models of the NLU component **312** to not only take intent of the user into consideration, but also use follow up actions to finetune the intent of the user inference model.

[0086] In some examples, the chatbot system **300** collects a set of prompts during an interactive session. The chatbot system **300** maps the set of prompts to a set of keywords and/or concepts including an intent vector, as exemplified by keywords and concepts. The chatbot system **300** assigns weights to the keywords of the set of keywords and/or concepts based on an importance score to the conversation of the keyword and/or concept, and determines the intent of the user based on the intent vector including the weighted keywords and/or concepts.

[0087] In some examples, the chatbot system **300** stores a conversation state in a user profile **314** as part of user data **324** of a series of interactive sessions so that the chatbot system **300** can have a context for conversations that occur over a plurality of interactive sessions.

[0088] In some examples, a knowledge base of the chatbot system **300** includes a set of information that the chatbot can use to understand and respond to an input of the user. This includes, but is not limited to, a predefined set of intents, entities, and responses, as well as external sources of information such as databases or APIs. In some examples, intent information of a friend, or friends, of the user **334** are used to understand, inform, and/or respond to a user's intent.

[0089] In some examples, an intent may not be determinable from the prompt of the user. For example, the user may make a declarative statement when no previous conversation history exists such as, but not limited to, making a declaration about the user's state, a declaration about a state of the user's immediate environment, or the like.

[0090] In operation **406**, the chatbot system **300** determines a type of the prompt **302** using the prompt **302** and a conversation history stored in the user profile **314**. For example, if the chatbot system **300** cannot determine any keywords in the prompt **302** that have relevance to the conversation history and none of the words in the prompt **302** have relevance to the chatbot system **300** or the interactive platform hosting the chatbot system **300**, the chatbot system **300** determines a type of the prompt as being a personality prompt to be directly communicated to the generative AI model **332** (of FIG. **3**) to prompt a response out of the generative AI model **332**. However, if the chatbot system **300** determines one or more keywords in the prompt that have relevance to the conversation history, relevance to the chatbot, or relevance to the interactive platform hosting the chatbot, the chatbot system **300** determines a type of the prompt **302** as being an intent prompt to be used to generate an API call to one or more services outside of the chatbot system **300**.

[0091] In response to determining that the prompt is a personality prompt, in operation **416**, the chatbot system **300** communicates the prompt **302** as a generative AI model personality prompt **424** to the generative AI model **332**.

[0092] In response to determining that the prompt **302** is an intent prompt from which a user intent can be determined, in operation **408**, the chatbot system **300** generates one or more API calls **426** to one or more additional services **326** outside of the chatbot system **300**. For example, if the chatbot system **300** determines that one or more keywords reference a physical location, the chatbot system **300** calls a mapping service passing the one or more keywords as arguments to the mapping service. In some examples, the chatbot system **300** determines that the keywords are related to a service or feature of the interactive platform hosting the chatbot system **300** and makes a call to that service or feature passing the one or more keywords as arguments to the service or feature.

[0093] In operation **410**, the chatbot system **300** receives one or more return values **428** from the one or more additional services **326**. For example, if the chatbot system **300** called a map service, the map service will return a physical location and information about the physical location. In some examples, if the chatbot system **300** called a service or feature of the interactive platform that hosts the chatbot system **300**, the service or feature will return data generated by the service or information about the feature.

[0094] In operation **412**, the chatbot system **300** generates a generative AI model hint prompt **422** using the one or more

return values **428**. For example, if the chatbot system **300** called a map service, the **300** uses the physical location and information about the physical location returned by the map service to generate the generative AI model hint prompt **422**. In some examples, if the chatbot system **300** called a service or feature of the interactive platform that hosts the chatbot system **300**, the chatbot system **300** uses the returned data generated by the service or returned information about the feature to generate the generative AI model hint prompt **422**.

[0095] In operation **414**, the chatbot system **300** communicates the generative AI model hint prompt **422** to the generative AI model **332**.

[0096] In operation **418**, the chatbot system **300** receives a chatbot response **308** from the generative AI model **332**.

[0097] In operation **420**, the chatbot system **300** provides the chatbot response **308** to the user **334** via the user system **306**.

[0098] In some examples, the chatbot system **300** uses a dialogue management component **310** to generate a chatbot response **308** using an intent **320**. For example, the dialogue management component **310** receives the intent **320** and communicates the intent **320** as a generative AI model prompt to the generative AI model **332**. The generative AI model **332** receives the generative AI model prompt and generates the chatbot response **308**. The generative AI model **332** communicates the chatbot response **308** to the dialogue management component **310**. The dialogue management component **310** receives the chatbot response **308** and communicates the chatbot response **308** to the response filter component **304** for additional processing. In some examples, the dialogue management component **310** generates the chatbot response **308** using a set of additional services **326**, such as, but not limited to, an image generation system. The dialogue management component **310** generates a service request **328** using the intent **320** and communicates the service request **328** to the additional service **326**. The additional service **326** uses the service request **328** to generate the request response **330** and communicates the request response **330** to the dialogue management component **310**. The dialogue management component **310** uses request response **330** to generate the chatbot response **308**.

[0099] In some examples, the chatbot system **300** uses a response filter component **304** (of FIG. **3**) to filter a raw response **318** generated by the dialogue management component **310**. For example, the dialogue management component **310** communicates the raw response **318** to the response filter component **304** and the response filter component **304** filters the raw response **318** based on a set of filtering criteria to eliminate specified content from the raw response **318**, for instance obscene words or concepts, or content that some may consider harmful. In some examples, the response filter component **304** generates an adjusted intent **322** based on filtering the raw response **318**, and the dialogue management component **310** generates an additional raw response **318** using the adjusted intent **322**.

[0100] In some examples, the generative AI model **332** and the additional service **326** are hosted by the same system that hosts other components of the chatbot system **300**. In some examples, the generative AI model **332** and the additional service **326** are hosted by a server system that is separate from the system that hosts the chatbot system **300**, and the chatbot system **300** communicates with the generative AI model **332** and the additional service **326** over a network. For example, the chatbot system **300** receives the prompt **302** and communicates the prompt **302** to the generative AI model **332** residing on the separate server system. The generative AI model **332** receives the prompt **302** and generates a raw response **318**. The generative AI model **332** then communicates the raw response **318** to the chatbot system **300**. The chatbot system **300** receives the response for subsequent processing as described herein.

[0101] In some examples, as part of the chatbot response **308**, the chatbot system **300** generates a set of personal AI system prompts that are displayed to the user **334** by the user system **306** that prompt the user **334** to interact with the chatbot system **300**. The personal AI system prompts generated by the chatbot system **300** may include chat information such as, but not limited to, context sensitive material, instructions to the user **334**, possible topics of conversation, and the like. In some examples, the chatbot system **300** uses the personal AI system prompts to suggest chat topics to a user **334** or to guide the user **334** through a conversation, such as providing instructional material on various topics. In some examples, the personal AI system prompts include suggestions of conversations or questions that are intended to solicit a user **334** to enter a prompt of the user **334**. The suggested chats are aimed at helping the user **334** get to information they need, but provide a helpful side effect of generating additional user interactions with the chatbot system **300**. These additional user interactions improve the ability of the chatbot system **300** determine user intent by provided additional context and information to the chatbot system **300**.

[0102] In some examples, the system that hosts the chatbot system **300** may not be a component of an interactive platform but another system that provides services and information to a group of users such as, but not limited to, a platform that provides enterprise wide connectivity to a group of users such as employees of a company, clients of an enterprise provided professional services, educational institutions, and the like. In some of such examples, the content provided to the users may not be advertising, but may be other types of useful information such as company policies, status messages for projects, newsworthy events, and the like.

[0103] FIG. **5** is an illustration of a chat session between a user and a chatbot, in accordance with some examples. To initiate the chat session **500**, a user, such as user **334** (of FIG. **3**), communicates an initial prompt **502** to a chatbot system, such as chatbot system **300** (of FIG. **3**). At the initiation of the chat session **500**, a conversation history **518** is an empty conversation history **508**. The initial prompt **502** is a declarative statement by the user that is not relevant to the chatbot system **300**, the conversation history **518**, or the interactive platform hosting the chatbot system **300**, so the chatbot system **300** makes an initial intent determination **504** of "none". Accordingly, the chatbot system **300** communicates the initial prompt **502** to a generative AI model, such as generative AI model **332** (of FIG. **3**) as a generative AI model personality prompt. The generative AI model **332** responds with a personality response **506** that prompts the user for an additional user prompt. The user responds with a prompt **510** that contains a keyword "Chinese" that is relevant to the conversation history with keywords **512** related to food. The chatbot system **300** determines a user intent, namely an intent to cat a particular kind of food. In response, the chatbot system **300** determines one or more API calls to additional services **514** such as a map service

with arguments that were determined from the conversation history with keywords **512**, a physical location of the user **334** as determined from a user profile and the interactive platform hosting the chatbot system **300**. The chatbot system **300** receives return values from the additional services **326** (of FIG. **3**) and generates a generative AI model hint prompt using the return values and communicates the generative AI model hint prompt to the generative AI model **332**. The generative AI model **332** responds with a hint-based response **516** that indicates an establishment close to the user **334** where the user **334** can procure the type of food that they want.

[0104] FIG. **6**A is a collaboration diagram of components of a chatbot system and FIG. **6**B is an activity diagram of a chat memories method of a chatbot system, in accordance with some examples. A chatbot system **300** uses a chat memories method **600** to generate personality prompts in a form of augmented prompts generated during a current conversation between a user and a chatbot using stored past conversations.

[0105] Although a chat memories method **600** depicts a particular sequence of operations, the sequence may be altered without departing from the scope of the present disclosure. For example, some of the operations depicted may be performed in parallel or in a different sequence that does not materially affect the function of the routine. In other examples, different components of the chatbot system **300** (of FIG. **3**) that implements the routine may perform functions at substantially the same time or in a specific sequence.

[0106] During one or more conversations between a user **334** and the chatbot system **300**, the chatbot system **300** stores conversation histories **630** into a conversation history datastore **620**. For example, the conversation histories **630** include sequences of user prompts **644**, augmented prompts **640** and personalized responses **642** by generative AI model **332** during the one or more conversations.

[0107] Any conversation history **630** data collected by the chatbot system core **646** is captured and stored with only user approval and deleted on user request. Further, such conversation history **630** data may be used for very limited purposes, such as generating personalized responses **642**. To ensure limited and authorized use of conversation history **630** data and other personally identifiable information (PII), access to this conversation history **630** data is restricted to authorized personnel only, if at all. Any use of conversation history **630** data may strictly be limited to the purpose of generation of the personalized responses **642**, and the conversation history **630** data is not shared or sold to any third party without the explicit consent of the user. In addition, appropriate technical and organizational measures are implemented to ensure the security and confidentiality of this sensitive information.

[0108] In operation **602**, the chatbot system **300** using a chatbot system core **646** such as, but not limited to, the NLU component **312** and the dialogue management component **310** (both of FIG. **3**), retrieves a conversation history **628** from conversation history datastore at operation **602**.

[0109] In operation **604**, the chatbot system **300** generates summarized memories **632** using the conversation history **628**. For example, the chatbot system **300** uses a summarizing component **616** to generate summarized memories **632** from the conversation history **628** using artificial intelligence methodologies and a summarizing model **648** that was previously generated using machine learning methodologies. In some examples, the summarizing model **648** includes, but is not limited to, a generative AI model, a neural network, a learning vector quantization network, a logistic regression model, a support vector machine, a random decision forest, a naïve Bayes model, a linear discriminant analysis model, and a K-nearest neighbor model. In some examples, machine learning methodologies used to generate the summarizing model **648** may include, but are not limited to, supervised learning, unsupervised learning, semi-supervised learning, reinforcement learning, dimensionality reduction, self-learning, feature learning, sparse dictionary learning, and anomaly detection.

[0110] In operation **606**, the chatbot system **300** generates moderated memories **634** using the summarized memories **632** and stores the memories **634** into a memories datastore **622**. For example, the chatbot system **300** uses the moderating component **618** to eliminate specified content from the summarized memories **632**, for instance obscene words or concepts, or content that some may consider harmful from the summarized memories **632** using artificial intelligence methodologies and a moderating model **650** that was previously generated using machine learning methodologies. In some examples, the moderating model **650** includes, but is not limited to, a generative AI model, a neural network, a learning vector quantization network, a logistic regression model, a support vector machine, a random decision forest, a naïve Bayes model, a linear discriminant analysis model, and a K-nearest neighbor model. In some examples, machine learning methodologies used to generate the moderating model **650** may include, but are not limited to, supervised learning, unsupervised learning, semi-supervised learning, reinforcement learning, dimensionality reduction, self-learning, feature learning, sparse dictionary learning, and anomaly detection.

[0111] In some examples, the chatbot system **300** also stores the memories **634** into a long term datastore **626** for later analysis.

[0112] In operation **608**, the chatbot system **300** generates a current conversation context **638** using one or more user prompts and responses from the generative AI model **332** of a current conversation between the user **334** and the chatbot system **300**. For example, the chatbot system **300** generates a conversation context **638** using a specified number of back-ward looking prompt and response interactions of a current conversation. In some examples, the chatbot system **300** uses 5 previous interactions to generate the conversation context **638**.

[0113] In operation **610**, the chatbot system **300** generates context-appropriate memories **636** from the memories datastore **622** using the current conversation context **638**. For example, the chatbot system **300** uses a retrieving component **624** to perform a semantic search of the memories datastore **622** for the context-appropriate memories **636**. As an example conversation, a user may have a set of collected user memories:

[0114] User likes to cook

[0115] User has a dishwasher to fix

[0116] User has a golden retriever

[0117] User just got divorced

[0118] If the user's user prompt **644** is "Do you have any dog food recommendations?", without using the retrieving component **624**, when these memories are used in an augmented prompt to a generative AI model, the generative AI model will try to inject all of the collected memories in a

response, making the response large and disjointed, such as "I'm sorry to hear about your divorce. As for dog food recommendations, I suggest looking for high-quality brands with natural ingredients. It's important to consider your golden retriever's age, weight, and any specific health needs when choosing their food. Some popular brands include Blue Buffalo™, Wellness™, and Taste of the Wild™. Don't forget to check with your vet for any specific recommendations. And good luck with fixing your dishwasher! And let me know if you're interested in cooking something!"

[0119] However, the retrieving component **624** identifies the memory that the user has a golden retriever as the most relevant memory to the user prompt and uses that memory in an augmented prompt. This may result in a personalized response of "I'd be happy to help! When it comes to dog food, it's important to consider your golden retriever's age, weight, and any specific health needs. Some popular brands that offer high-quality dog food include Blue Buffalo™, Wellness™, and Taste of the Wild™. You could also consider a raw food diet or homemade dog food, but it's important to consult with your vet before making any major changes. And don't forget to make sure your golden retriever has access to plenty of fresh water throughout the day!"

[0120] In operation **612**, the chatbot system **300** generates an augmented prompt **640** using the context-appropriate memories **636** and the user prompt **644** and communicates the augmented prompt **640** to the generative AI model **332**. For example, the chatbot system **300** uses the retrieving component **624** to generate the augmented prompt **640** using the user prompt **644**, the context-appropriate memories **636**, and an augmented prompt model **652** that was previously generated using machine learning methodologies. In some examples, the augmented prompt model **652** includes, but is not limited to, a generative AI model, a neural network, a learning vector quantization network, a logistic regression model, a support vector machine, a random decision forest, a naïve Bayes model, a linear discriminant analysis model, and a K-nearest neighbor model. In some examples, machine learning methodologies used to generate the augmented prompt model **652** may include, but are not limited to, supervised learning, unsupervised learning, semi-supervised learning, reinforcement learning, dimensionality reduction, self-learning, feature learning, sparse dictionary learning, and anomaly detection.

[0121] In some examples, contextual matching retrieval is performed via prompting of the generative AI model. For example, the chatbot system **300** instructs the generative AI model **332** to only use relevant user knowledge when generating a personalized response. In an example, the chatbot system **300** adds prompting such as "You only use contextual information relevant to the question" to the augmented prompt **640**. In some examples, a length limitation is added to the contextual information to mitigate computation costs.

[0122] In some examples, the retrieving component **624** retrieves relevant information from all stored user knowledge, and only sends relevant contexts to the generative AI model **332**. Instead of instructing the generative AI model **332** to do the filtering. In some examples, the retrieving component **624** determines contextual important memories in the memories datastore **622** using a semantic search process.

[0123] In some examples, the memories datastore **622** is a Key-Value data store. The key is a user id, and the value is the summarized memories **634**. During operation, the retrieved context-appropriate memories **636** will be cached throughout the session. In some examples, instead of storing raw text directly, precomputed embeddings of raw texts for stored.

[0124] In some examples, in the augmented prompt **640**, the generative AI model **332** is instructed to output responses based on personalized context. The personalized context includes the context-appropriate memories **636** retrieved from the memories datastore **622**. Below is an example schema for augmented prompt:

[0125] <user utterance>

[0126] <blank line>

[0127] You write the response with help from information below. You only use information relevant to the question. You only use non-negative information.

[0128] <memory>

[0129] In some examples, the generative AI model **332** is instructed to only use positive memory items from the context-appropriate memories **636**, to avoid potential negative user experiences brought on by negative memories. In some examples, both positive and negative memories are stored in the memories datastore **622** allowing the generative AI model **332** to generate empathetic personalized response **642** in database.

[0130] In some examples, the generative AI model **332** is prompted by an augmented prompt such as, but not limited to: "Your goal is to summarize user interests, hobbies, long-standing facts and goals from user messages and previous summary of the user. If user mentions their friends' or family members' interests, hobbies, long-standing facts and goals, you also summarize it. Previous summary only represents information in the past. Update previous summary if some information is outdated. Otherwise, append previous summary to current summary. You only summarize user's messages. You don't summarize for AI or user's conversation partner. Your response is "None" if not enough information about user's interests, hobbies, long-standing facts and goals. You don't need to answer user's question. Your response is "None" if user is asking for answers for homework or coursework."

[0131] In some examples, the memories datastore **622** is regularly updated to reflect changes in the life of the user **334**.

[0132] In operation **614**, the chatbot system **300** receives a personalized response **642** from the generative AI model **332** and provides the personalized response **642** to the user **334** during the current conversation between the user **334** and the chatbot system **300**.

[0133] In some examples, through the use of the memories datastore **622**, the chatbot system **300** has a better user understanding by leveraging users' conversation history by internalizing and persisting the information via a user knowledge database.

[0134] In some examples, the chatbot system **300** personalizes responses to users in appropriate conversations and using appropriate user contextual information as the chatbot system **300** may avoid scenarios where the personalized response **642** includes too much user information.

[0135] In some examples, the chatbot system **300** can scale up to longer conversations and time windows. If users mentioned important factual information several months ago, the chatbot system **300** is still able to retrieve it and use it to personalize the responses whenever needed.

[0136] In some examples, when the chatbot system **300** receives a request from the user **334** to delete a conversation, the chatbot system **300** deletes the conversation and the memories stored in the memories datastore **622** associated with that conversation as well.

[0137] In some examples, the retrieved context-appropriate memories **636** are only based on each user's provided information. The information is not shared across users.

[0138] In some examples, the memories datastore **622** is isolated for each conversation group and only memories generated from respective historical chats are used to generate respective augmented prompts associated with a conversation group. For example, historical chats between the chatbot system **300** and user_B will not be used to augment chats with user_A. In some examples, an exception is made if user_A mentioned some fact about user_B to the chatbot system, then the chatbot system **300** uses this information when user_A asks questions about user_B later. In some examples, the chatbot system **300** will not search a memories datastore of user_B to generate a personalized response for user_A's user prompt.

[0139] In some examples, the generative AI model **332** and the chatbot system **300** are hosted by the same system. In some examples, the generative AI model **332** is hosted by a server system that is separate from the chatbot system **300**, and the chatbot system **300** communicates with the generative AI model **332** over a network.

Machine-Learning Pipeline

[0140] FIG. **7** illustrates a machine-learning pipeline **800** and FIG. **8** is a flowchart depicting a method of the machine-learning pipeline **800**, according to some examples. The machine-learning pipeline **800** may be used to generate a trained machine-learning program **802** of FIG. **8**, to perform operations associated with searches and query responses. In some examples, the trained machine-learning program **802** includes a generative AI model such as, but not limited to a generative AI model **332** of FIG. **3**, a summarizing model **648** of FIG. **6**A, a moderating model **650** of FIG. **6**A, an augmented prompt model **652** of FIG. **6**A, and the like.

Overview

[0141] Broadly, machine learning may involve using computer algorithms to automatically learn patterns and relationships in data, potentially without the need for explicit programming. Machine learning algorithms can be divided into three main categories: supervised learning, unsupervised learning, and reinforcement learning.

[0142] Supervised learning involves training a model using labeled data to predict an output for new, unseen inputs. Examples of supervised learning algorithms include linear regression, decision trees, and neural networks.

[0143] Unsupervised learning involves training a model on unlabeled data to find hidden patterns and relationships in the data. Examples of unsupervised learning algorithms include clustering, principal component analysis, and generative models like autoencoders.

[0144] Reinforcement learning involves training a model to make decisions in a dynamic environment by receiving feedback in the form of rewards or penalties. Examples of reinforcement learning algorithms include Q-learning and policy gradient methods.

[0145] Examples of specific machine learning algorithms that may be deployed, according to some examples, include logistic regression, which is a type of supervised learning algorithm used for binary classification tasks. Logistic regression models the probability of a binary response variable based on one or more predictor variables. Another example type of machine learning algorithm is Naïve Bayes, which is another supervised learning algorithm used for classification tasks. Naïve Bayes is based on Bayes' theorem and assumes that the predictor variables are independent of each other. Random Forest is another type of supervised learning algorithm used for classification, regression, and other tasks. Random Forest builds a collection of decision trees and combines their outputs to make predictions. Further examples include neural networks, which consist of interconnected layers of nodes (or neurons) that process information and make predictions based on the input data. Matrix factorization is another type of machine learning algorithm used for recommender systems and other tasks. Matrix factorization decomposes a matrix into two or more matrices to uncover hidden patterns or relationships in the data. Support Vector Machines (SVM) are a type of supervised learning algorithm used for classification, regression, and other tasks. SVM finds a hyperplane that separates the different classes in the data. Other types of machine learning algorithms include decision trees, k-nearest neighbors, clustering algorithms, and deep learning algorithms such as convolutional neural networks (CNN), recurrent neural networks (RNN), and transformer models. The choice of algorithm depends on the nature of the data, the complexity of the problem, and the performance requirements of the application.

[0146] The performance of machine learning models is typically evaluated on a separate test set of data that was not used during training to ensure that the model can generalize to new, unseen data.

[0147] Although several specific examples of machine learning algorithms are discussed herein, the principles discussed herein can be applied to other machine learning algorithms as well. Deep learning algorithms such as convolutional neural networks, recurrent neural networks, and transformers, as well as more traditional machine learning algorithms like decision trees, random forests, and gradient boosting may be used in various machine learning applications.

[0148] Three example types of problems in machine learning are classification problems, regression problems, and generation problems. Classification problems, also referred to as categorization problems, aim at classifying items into one of several category values (for example, is this object an apple or an orange?). Regression algorithms aim at quantifying some items (for example, by providing a value that is a real number). Generation algorithms aim at producing new examples that are similar to examples provided for training. For instance, a text generation algorithm is trained on many text documents and is configured to generate new coherent text with similar statistical properties as the training data.

Training Phases **804**

[0149] Generating a trained machine-learning program **802** may include multiple phases that form part of the machine-learning pipeline **800**, including for example the following phases illustrated in FIG. **7**:

[0150] Data collection and preprocessing **702**: This phase may include acquiring and cleaning data to ensure that it is suitable for use in the machine learning model. This phase may also include removing duplicates, handling missing values, and converting data into a suitable format.

[0151] Feature engineering **704**: This phase may include selecting and transforming the training data **806** to create features that are useful for predicting the target variable. Feature engineering may include (1) receiving features **808** (e.g., as structured or labeled data in supervised learning) and/or (2) identifying features **808** (e.g., unstructured or unlabeled data for unsupervised learning) in training data **806**.

[0152] Model selection and training **706**: This phase may include selecting an appropriate machine learning algorithm and training it on the preprocessed data. This phase may further involve splitting the data into training and testing sets, using cross-validation to evaluate the model, and tuning hyperparameters to improve performance.

[0153] Model evaluation **708**: This phase may include evaluating the performance of a trained model (e.g., the trained machine-learning program **802**) on a separate testing dataset. This phase can help determine if the model is overfitting or underfitting and determine whether the model is suitable for deployment.

[0154] Prediction **710**: This phase involves using a trained model (e.g., trained machine-learning program **802**) to generate predictions on new, unseen data.

[0155] Validation, refinement or retraining **712**: This phase may include updating a model based on feedback generated from the prediction phase, such as new data or user feedback.

[0156] Deployment **714**: This phase may include integrating the trained model (e.g., the trained machine-learning program **802**) into a more extensive system or application, such as a web service, mobile app, or IoT device. This phase can involve setting up APIs, building a user interface, and ensuring that the model is scalable and can handle large volumes of data.

[0157] FIG. **8** illustrates further details of two example phases, namely a training phase **804** (e.g., part of the model selection and trainings **706**) and a prediction phase **810** (part of prediction **710**). Prior to the training phase **804**, feature engineering **704** is used to identify features **808**. This may include identifying informative, discriminating, and independent features for effectively operating the trained machine-learning program **802** in pattern recognition, classification, and regression. In some examples, the training data **806** includes labeled data, known for pre-identified features **808** and one or more outcomes. Each of the features **808** may be a variable or attribute, such as an individual measurable property of a process, article, system, or phenomenon represented by a data set (e.g., the training data **806**). Features **808** may also be of different types, such as numeric features, strings, and graphs, and may include one or more of content **812**, concepts **814**, attributes **816**, historical data **818**, and/or user data **820**, merely for example.

[0158] In training phase **804**, the machine-learning pipeline **800** uses the training data **806** to find correlations among the features **808** that affect a predicted outcome or prediction/inference data **822**.

[0159] With the training data **806** and the identified features **808**, the trained machine-learning program **802** is trained during the training phase **804** during machine-learning program training **824**. The machine-learning program training **824** appraises values of the features **808** as they correlate to the training data **806**. The result of the training is the trained machine-learning program **802** (e.g., a trained or learned model).

[0160] Further, the training phase **804** may involve machine learning, in which the training data **806** is structured (e.g., labeled during preprocessing operations). The trained machine-learning program **802** implements a neural network **826** capable of performing, for example, classification and clustering operations. In other examples, the training phase **804** may involve deep learning, in which the training data **806** is unstructured, and the trained machine-learning program **802** implements a deep neural network **826** that can perform both feature extraction and classification/clustering operations.

[0161] In some examples, a neural network **826** may be generated during the training phase **804**, and implemented within the trained machine-learning program **802**. The neural network **826** includes a hierarchical (e.g., layered) organization of neurons, with each layer consisting of multiple neurons or nodes. Neurons in the input layer receive the input data, while neurons in the output layer produce the final output of the network. Between the input and output layers, there may be one or more hidden layers, each consisting of multiple neurons.

[0162] Each neuron in the neural network **826** operationally computes a function, such as an activation function, which takes as input the weighted sum of the outputs of the neurons in the previous layer, as well as a bias term. The output of this function is then passed as input to the neurons in the next layer. If the output of the activation function exceeds a certain threshold, an output is communicated from that neuron (e.g., transmitting neuron) to a connected neuron (e.g., receiving neuron) in successive layers. The connections between neurons have associated weights, which define the influence of the input from a transmitting neuron to a receiving neuron. During the training phase, these weights are adjusted by the learning algorithm to optimize the performance of the network. Different types of neural networks may use different activation functions and learning algorithms, affecting their performance on different tasks. The layered organization of neurons and the use of activation functions and weights enable neural networks to model complex relationships between inputs and outputs, and to generalize to new inputs that were not seen during training.

[0163] In some examples, the neural network **826** may also be one of several different types of neural networks, such as a single-layer feed-forward network, a Multilayer Perceptron (MLP), an Artificial Neural Network (ANN), a Recurrent Neural Network (RNN), a Long Short-Term Memory Network (LSTM), a Bidirectional Neural Network, a symmetrically connected neural network, a Deep Belief Network (DBN), a Convolutional Neural Network (CNN), a Generative Adversarial Network (GAN), an Autoencoder Neural Network (AE), a Restricted Boltzmann Machine (RBM), a Hopfield Network, a Self-Organizing Map (SOM), a Radial Basis Function Network (RBFN), a Spiking Neural Network (SNN), a Liquid State Machine (LSM), an Echo State Network (ESN), a Neural Turing Machine (NTM), or a Transformer Network, merely for example.

[0164] In addition to the training phase **804**, a validation phase may be performed on a separate dataset known as the validation dataset. The validation dataset is used to tune the hyperparameters of a model, such as the learning rate and the regularization parameter. The hyperparameters are adjusted to improve the model's performance on the validation dataset.

[0165] Once a model is fully trained and validated, in a testing phase, the model may be tested on a new dataset. The testing dataset is used to evaluate the model's performance and ensure that the model has not overfitted the training data.

[0166] In prediction phase **810**, the trained machine-learning program **802** uses the features **808** for analyzing query data **828** to generate inferences, outcomes, or predictions, as examples of a prediction/inference data **822**. For example, during prediction phase **810**, the trained machine-learning program **802** generates an output. Query data **828** is provided as an input to the trained machine-learning program **802**, and the trained machine-learning program **802** generates the prediction/inference data **822** as output, responsive to receipt of the query data **828**.

[0167] In some examples, the trained machine-learning program **802** may be a generative AI model. Generative AI is a term that may refer to any type of artificial intelligence that can create new content from training data **806**. For example, generative AI can produce text, images, video, audio, code, or synthetic data similar to the original data but not identical. Some of the techniques that may be used in generative AI are:

- **[0168]** Convolutional Neural Networks (CNNs): CNNs may be used for image recognition and computer vision tasks. CNNs may, for example, be designed to extract features from images by using filters or kernels that scan the input image and highlight important patterns.
- **[0169]** Recurrent Neural Networks (RNNs): RNNs may be used for processing sequential data, such as speech, text, and time series data, for example. RNNs employ feedback loops that allow them to capture temporal dependencies and remember past inputs.
- **[0170]** Generative adversarial networks (GANs): GANs may include two neural networks: a generator and a discriminator. The generator network attempts to create realistic content that can "fool" the discriminator network, while the discriminator network attempts to distinguish between real and fake content. The generator and discriminator networks compete with each other and improve over time.
- **[0171]** Variational autoencoders (VAEs): VAEs may encode input data into a latent space (e.g., a compressed representation) and then decode it back into output data. The latent space can be manipulated to generate new variations of the output data. VAEs may use self-attention mechanisms to process input data, allowing them to handle long text sequences and capture complex dependencies.
- **[0172]** Transformer models: Transformer models may use attention mechanisms to learn the relationships between different parts of input data (such as words or pixels) and generate output data based on these relationships. Transformer models can handle sequential data, such as text or speech, as well as non-sequential data, such as images or code.

[0173] In generative AI examples, the query data **828** may include text, audio, image, video, numeric, or media content prompts and the output prediction/inference data **822** includes text, images, video, audio, code, or synthetic data.

Data Architecture

[0174] FIG. **9** is a schematic diagram illustrating data structures **900**, which may be stored in the database **904** of the interactive server system **110** (of FIG. **1**), according to some examples. While the content of the database **904** is shown to include multiple tables, it will be appreciated that the data could be stored in other types of data structures (e.g., as an object-oriented database).

[0175] Any data collected by an interactive platform is captured and stored with only user approval and deleted on user request. Further, such data may be used for very limited purposes, such as identity verification. To ensure limited and authorized use of data and other personally identifiable information, access to this data is restricted to authorized personnel only, if at all. Any use of data may strictly be limited to a designated purpose and the data is not shared or sold to any third party without the explicit consent of the user. In addition, appropriate technical and organizational measures are implemented to ensure the security and confidentiality of this sensitive information.

[0176] The database **904** includes message data stored within a message table **906**. This message data includes, for any particular message, at least message sender data, message recipient (or receiver) data, and a payload. Further details regarding information that may be included in a message, and included within the message data stored in the message table **906**, are described below with reference to FIG. **10**.

[0177] An entity table **908** stores entity data, and is linked (e.g., referentially) to an entity graph **910** and profile data **902**. Entities for which records are maintained within the entity table **908** may include individuals, corporate entities, organizations, objects, places, events, and so forth. Regardless of entity type, any entity regarding which the interactive server system **110** stores data may be a recognized entity. Each entity is provided with a unique identifier, as well as an entity type identifier (not shown).

[0178] The entity graph **910** stores information regarding relationships and associations between entities. Such relationships may be social, professional (e.g., work at a common corporation or organization), interest-based, or activity-based, merely for example. Certain relationships between entities may be unidirectional, such as a subscription by an individual user to digital content of a commercial or publishing user (e.g., a newspaper or other digital media outlet, or a brand). Other relationships may be bidirectional, such as a "friend" relationship between individual users of the interactive platform **100** (of FIG. **1**).

[0179] Certain permissions and relationships may be attached to each relationship, and also to each direction of a relationship. For example, a bidirectional relationship (e.g., a friend relationship between individual users) may include authorization for the publication of digital content items between the individual users, but may impose certain restrictions or filters on the publication of such digital content items (e.g., based on content characteristics, location data or time of day data). Similarly, a subscription relationship between an individual user and a commercial user may impose different degrees of restrictions on the publication of digital content from the commercial user to the individual user, and may significantly restrict or block the publication

of digital content from the individual user to the commercial user. A particular user, as an example of an entity, may record certain restrictions (e.g., by way of privacy settings) in a record for that entity within the entity table **908**. Such privacy settings may be applied to all types of relationships within the context of the interactive platform **100**, or may selectively be applied to only certain types of relationships.

[0180] The profile data **902** stores multiple types of profile data about a particular entity. The profile data **902** may be selectively used and presented to other users of the interactive platform **100** based on privacy settings specified by a particular entity. Where the entity is an individual, the profile data **902** includes, for example, a username, telephone number, address, settings (e.g., notification and privacy settings), as well as a user-selected avatar representation (or collection of such avatar representations). A particular user may then selectively include one or more of these avatar representations within the content of messages communicated via the interactive platform **100**, and on map interfaces displayed by interaction clients **104** to other users. The collection of avatar representations may include "status avatars," which present a graphical representation of a status or activity that the user may select to communicate at a particular time.

[0181] Where the entity is a group, the profile data **902** for the group may similarly include one or more avatar representations associated with the group, in addition to the group name, members, and various settings (e.g., notifications) for the relevant group.

[0182] The database **904** also stores augmentation data, such as overlays or filters, in an augmentation table **912**. The augmentation data is associated with and applied to videos (for which data is stored in a video table **914**) and images (for which data is stored in an image table **916**).

[0183] Filters, in some examples, are overlays that are displayed as overlaid on an image or video during presentation to a message receiver. Filters may be of various types, including user-selected filters from a set of filters presented to a message sender by the interaction client **104** when the message sender is composing a message. Other types of filters include geolocation filters (also known as geo-filters), which may be presented to a message sender based on geographic location. For example, geolocation filters specific to a neighborhood or special location may be presented within a user interface by the interaction client **104**, based on geolocation information determined by a Global Positioning System (GPS) unit of the user system **102**.

[0184] Another type of filter is a data filter, which may be selectively presented to a message sender by the interaction client **104** based on other inputs or information gathered by the user system **102** during the message creation process. Examples of data filters include current temperature at a specific location, a current speed at which a message sender is traveling, battery life for a user system **102**, or the current time.

[0185] Other augmentation data that may be stored within the image table **916** includes augmented reality content items (e.g., corresponding to applying Lenses or augmented reality experiences). An augmented reality content item may be a real-time special effect and sound that may be added to an image or a video.

[0186] As described above, augmentation data includes augmented reality (AR), virtual reality (VR) and mixed reality (MR) content items, overlays, image transformations, images, and modifications that may be applied to image data (e.g., videos or images). This includes real-time modifications, which modify an image as it is captured using device sensors (e.g., one or multiple cameras) of the user system **102** and then displayed on a screen of the user system **102** with the modifications. This also includes modifications to stored content, such as video clips in a collection or group that may be modified. For example, in a user system **102** with access to multiple augmented reality content items, a user can use a single video clip with multiple augmented reality content items to see how the different augmented reality content items will modify the stored clip. Similarly, real-time video capture may use modifications to show how video images currently being captured by sensors of a user system **102** would modify the captured data. Such data may simply be displayed on the screen and not stored in memory, or the content captured by the device sensors may be recorded and stored in memory with or without the modifications (or both). In some systems, a preview feature can show how different augmented reality content items will look within different windows in a display at the same time. This can, for example, enable multiple windows with different pseudorandom animations to be viewed on a display at the same time.

[0187] Data and various systems using augmented reality content items or other such transform systems to modify content using this data can thus involve detection of objects (e.g., faces, hands, bodies, cats, dogs, surfaces, objects, etc.), tracking of such objects as they leave, enter, and move around the field of view in video frames, and the modification or transformation of such objects as they are tracked. In various examples, different methods for achieving such transformations may be used. Some examples may involve generating a three-dimensional mesh model of the object or objects, and using transformations and animated textures of the model within the video to achieve the transformation. In some examples, tracking of points on an object may be used to place an image or texture (which may be two-dimensional or three-dimensional) at the tracked position. In still further examples, neural network analysis of video frames may be used to place images, models, or textures in content (e.g., images or frames of video). Augmented reality content items thus refer both to the images, models, and textures used to create transformations in content, as well as to additional modeling and analysis information needed to achieve such transformations with object detection, tracking, and placement.

[0188] Real-time video processing can be performed with any kind of video data (e.g., video streams, video files, etc.) saved in a memory of a computerized system of any kind. For example, a user can load video files and save them in a memory of a device, or can generate a video stream using sensors of the device. Additionally, any objects can be processed using a computer animation model, such as a human's face and parts of a human body, animals, or non-living things such as chairs, cars, or other objects.

[0189] In some examples, when a particular modification is selected along with content to be transformed, elements to be transformed are identified by the computing device, and then detected and tracked if they are present in the frames of the video. The elements of the object are modified according to the request for modification, thus transforming the frames of the video stream. Transformation of frames of a video stream can be performed by different methods for different

kinds of transformation. For example, for transformations of frames mostly referring to changing forms of an object's elements, characteristic points for each element of an object are calculated (e.g., using an Active Shape Model (ASM) or other known methods). Then, a mesh based on the characteristic points is generated for each element of the object. This mesh is used in the following stage of tracking the elements of the object in the video stream. In the process of tracking, the mesh for each element is aligned with a position of each element. Then, additional points are generated on the mesh.

[0190] In some examples, transformations changing some areas of an object using its elements can be performed by calculating characteristic points for each element of an object and generating a mesh based on the calculated characteristic points. Points are generated on the mesh, and then various areas based on the points are generated. The elements of the object are then tracked by aligning the area for each element with a position for each of the at least one element, and properties of the areas can be modified based on the request for modification, thus transforming the frames of the video stream. Depending on the specific request for modification, properties of the mentioned areas can be transformed in different ways. Such modifications may involve changing the color of areas; removing some part of areas from the frames of the video stream; including new objects into areas that are based on a request for modification; and modifying or distorting the elements of an area or object. In various examples, any combination of such modifications or other similar modifications may be used. For certain models to be animated, some characteristic points can be selected as control points to be used in determining the entire state-space of options for the model animation.

[0191] In some examples of a computer animation model to transform image data using face detection, the face is detected on an image using a specific face detection algorithm (e.g., Viola-Jones). Then, an Active Shape Model (ASM) algorithm is applied to the face region of an image to detect facial feature reference points.

[0192] Other methods and algorithms suitable for face detection can be used. For example, in some examples, features are located using a landmark, which represents a distinguishable point present in most of the images under consideration. For facial landmarks, for example, the location of the left eye pupil may be used. If an initial landmark is not identifiable (e.g., if a person has an eyepatch), secondary landmarks may be used. Such landmark identification procedures may be used for any such objects. In some examples, a set of landmarks forms a shape. Shapes can be represented as vectors using the coordinates of the points in the shape. One shape is aligned to another with a similarity transform (allowing translation, scaling, and rotation) that minimizes the average Euclidean distance between shape points. The mean shape is the mean of the aligned training shapes.

[0193] A transformation system can capture an image or video stream on a user device (e.g., the user system **102**) and perform complex image manipulations locally on the user system **102** while maintaining a suitable user experience, computation time, and power consumption. The complex image manipulations may include size and shape changes, emotion transfers (e.g., changing a face from a frown to a smile), state transfers (e.g., aging a subject, reducing apparent age, changing gender), style transfers, graphical element application, and any other suitable image or video manipulation implemented by a convolutional neural network that has been configured to execute efficiently on the user system **102**.

[0194] In some examples, a computer animation model to transform image data can be used by a system where a user may capture an image or video stream of the user (e.g., a selfie) using the user system **102** having a neural network operating as part of an interaction client **104** operating on the user system **102**. The transformation system operating within the interaction client **104** determines the presence of a face within the image or video stream and provides modification icons associated with a computer animation model to transform image data, or the computer animation model can be present as associated with an interface described herein. The modification icons include changes that are the basis for modifying the user's face within the image or video stream as part of the modification operation. Once a modification icon is selected, the transform system initiates a process to convert the image of the user to reflect the selected modification icon (e.g., generate a smiling face on the user). A modified image or video stream may be presented in a graphical user interface displayed on the user system **102** as soon as the image or video stream is captured and a specified modification is selected. The transformation system may implement a complex convolutional neural network on a portion of the image or video stream to generate and apply the selected modification. That is, the user may capture the image or video stream and be presented with a modified result in real-time or near real-time once a modification icon has been selected. Further, the modification may be persistent while the video stream is being captured, and the selected modification icon remains toggled. Machine-taught neural networks may be used to enable such modifications.

[0195] The graphical user interface, presenting the modification performed by the transform system, may supply the user with additional interaction options. Such options may be based on the interface used to initiate the content capture and selection of a particular computer animation model (e.g., initiation from a content creator user interface). In various examples, a modification may be persistent after an initial selection of a modification icon. The user may toggle the modification on or off by tapping or otherwise selecting the face being modified by the transformation system and store it for later viewing or browsing to other areas of the imaging application. Where multiple faces are modified by the transformation system, the user may toggle the modification on or off globally by tapping or selecting a single face modified and displayed within a graphical user interface. In some examples, individual faces, among a group of multiple faces, may be individually modified, or such modifications may be individually toggled by tapping or selecting the individual face or a series of individual faces displayed within the graphical user interface.

[0196] A story table **918** stores data regarding collections of messages and associated image, video, or audio data, which are compiled into a collection (e.g., a story or a gallery). The creation of a particular collection may be initiated by a particular user (e.g., each user for which a record is maintained in the entity table **908**). A user may create a "personal story" in the form of a collection of content that has been created and sent/broadcast by that user. To this end, the user interface of the interaction client **104**

may include an icon that is user-selectable to enable a message sender to add specific content to his or her personal story.

[0197] A collection may also constitute a "live story," which is a collection of content from multiple users that is created manually, automatically, or using a combination of manual and automatic methodologies. For example, a "live story" may constitute a curated stream of user-submitted content from various locations and events. Users whose user devices have location services enabled and are at a common location event at a particular time may, for example, be presented with an option, via a user interface of the interaction client **104**, to contribute content to a particular live story. The live story may be identified to the user by the interaction client **104**, based on his or her location. The end result is a "live story" told from a community perspective.

[0198] A further type of content collection is known as a "location story," which enables a user whose user system **102** is located within a specific geographic location (e.g., on a college or university campus) to contribute to a particular collection. In some examples, a contribution to a location story may require a second degree of authentication to verify that the end-user belongs to a specific organization or other entity (e.g., is a student on the university campus).

[0199] As mentioned above, the video table **914** stores video data that, in some examples, is associated with messages for which records are maintained within the message table **906**. Similarly, the image table **916** stores image data associated with messages for which message data is stored in the entity table **908**. The entity table **908** may associate various augmentations from the augmentation table **912** with various images and videos stored in the image table **916** and the video table **914**.

[0200] The databases **904** also include social network information collected by an interactive platform. The social network information may include without limitation relationship and communication data for users of the interactive platform. The social network information can be used to group two or more users and offer additional functionality of the interactive platform **100**. Examples of relationships include, but are not limited to, best friends relationships where two or more users are determined to be mutual best friends based on a frequency of their interactions, users who have common interests in current events, users who share an affiliation through social clubs or philanthropic organizations, and the like. Examples of communications include without limitation chats, private and public messages, exchanges of media such as images, videos, audio recordings, and the like.

Data Communications Architecture

[0201] FIG. **10** is a schematic diagram illustrating a structure of a message **1000**, according to some examples, generated by an interaction client **104** for communication to a further interaction client **104** via the Interactive servers **124**. The content of a particular message **1000** is used to populate the message table **906** stored within the database **904**, accessible by the Interactive servers **124**. Similarly, the content of a message **1000** is stored in memory as "in-transit" or "in-flight" data of the user system **102** or the Interactive servers **124**. A message **1000** is shown to include the following example components:

[0202] Message identifier **1002**: a unique identifier that identifies the message **1000**.

[0203] Message text payload **1034**: text, to be generated by a user via a user interface of the user system **102**, and that is included in the message **1000**.

[0204] Message image payload **1004**: image data, captured by a camera component of a user system **102** or retrieved from a memory component of a user system **102**, and that is included in the message **1000**. Image data for a sent or received message **1000** may be stored in the image table **1006**.

[0205] Message video payload **1008**: video data, captured by a camera component or retrieved from a memory component of the user system **102**, and that is included in the message **1000**. Video data for a sent or received message **1000** may be stored in the video table **1010**.

[0206] Message audio payload **1012**: audio data, captured by a microphone or retrieved from a memory component of the user system **102**, and that is included in the message **1000**.

[0207] Message augmentation data **1014**: augmentation data (e.g., filters, stickers, or other annotations or enhancements) that represents augmentations to be applied to message image payload **1004**, message video payload **1008**, or message audio payload **1012** of the message **1000**. Augmentation data for a sent or received message **1000** may be stored in the augmentation table **1016**.

[0208] Message duration parameter **1018**: parameter value indicating, in seconds, the amount of time for which content of the message (e.g., the message image payload **1004**, message video payload **1008**, message audio payload **1012**) is to be presented or made accessible to a user via the interaction client **104**.

[0209] Message geolocation parameter **1020**: geolocation data (e.g., latitudinal and longitudinal coordinates) associated with the content payload of the message. Multiple message geolocation parameter **1020** values may be included in the payload, each of these parameter values being associated with respect to content items included in the content (e.g., a specific image within the message image payload **1004**, or a specific video in the message video payload **1008**).

[0210] Message story identifier **1022**: identifier values identifying one or more content collections (e.g., "stories" identified in the story table **1024**) with which a particular content item in the message image payload **1004** of the message **1000** is associated. For example, multiple images within the message image payload **1004** may each be associated with multiple content collections using identifier values.

[0211] Message tag **1026**: each message **1000** may be tagged with multiple tags, each of which is indicative of the subject matter of content included in the message payload. For example, where a particular image included in the message image payload **1004** depicts an animal (e.g., a lion), a tag value may be included within the message tag **1026** that is indicative of the relevant animal. Tag values may be generated manually, based on user input, or may be automatically generated using, for example, image recognition.

[0212] Message sender identifier **1028**: an identifier (e.g., a messaging system identifier, email address, or device identifier) indicative of a user of the user system

102 on which the message **1000** was generated and from which the message **1000** was sent.

[0213] Message receiver identifier **1030**: an identifier (e.g., a messaging system identifier, email address, or device identifier) indicative of a user of the user system **102** to which the message **1000** is addressed.

[0214] The contents (e.g., values) of the various components of message **1000** may be pointers to locations in tables within which content data values are stored. For example, an image value in the message image payload **1004** may be a pointer to (or address of) a location within an image table **1006**. Similarly, values within the message video payload **1008** may point to data stored within a video table **1010**, values stored within the message augmentation data **1014** may point to data stored in an augmentation table **1016**, values stored within the message story identifier **1022** may point to data stored in a story table **1024**, and values stored within the message sender identifier **1028** and the message receiver identifier **1030** may point to user records stored within an entity table **1032**.

[0215] FIG. **11** is a schematic diagram illustrating an access-limiting process **1100**, in terms of which access to content (e.g., an ephemeral message **1102** and associated multimedia payload of data) or a content collection (e.g., an ephemeral message group **1104**) may be time-limited (e.g., made ephemeral).

[0216] An ephemeral message **1102** is shown to be associated with a message duration parameter **1106**, the value of which determines the amount of time that the ephemeral message **1102** will be displayed to a receiving user of the ephemeral message **1102** by the interaction client **104**. In some examples, an ephemeral message **1102** is viewable by a receiving user for up to a maximum of **10** seconds, depending on the amount of time that the message sender specifies using the message duration parameter **1106**.

[0217] The message duration parameter **1106** and the message receiver identifier **1108** are shown to be inputs to a message timer **1110**, which is responsible for determining the amount of time that the ephemeral message **1102** is shown to a particular receiving user identified by the message receiver identifier **1108**. In particular, the ephemeral message **1102** will be shown to the relevant receiving user for a time period determined by the value of the message duration parameter **1106**. The message timer **1110** is shown to provide output to a more generalized messaging system **1112**, which is responsible for the overall timing of display of content (e.g., an ephemeral message **1102**) to a receiving user.

[0218] The ephemeral message **1102** is shown in FIG. **11** to be included within an ephemeral message group **1104** (e.g., a collection of messages in a personal story, or an event story). The ephemeral message group **1104** has an associated group duration parameter **1114**, a value of which determines a time duration for which the ephemeral message group **1104** is presented and accessible to users of the interactive platform **100**. The group duration parameter **1114**, for example, may be the duration of a music concert, where the ephemeral message group **1104** is a collection of content pertaining to that concert. Alternatively, a user (either the owning user or a curator user) may specify the value for the group duration parameter **1114** when performing the setup and creation of the ephemeral message group **1104**.

[0219] Additionally, each ephemeral message **1102** within the ephemeral message group **1104** has an associated group participation parameter **1116**, a value of which determines the duration of time for which the ephemeral message **1102** will be accessible within the context of the ephemeral message group **1104**. Accordingly, a particular ephemeral message group **1104** may "expire" and become inaccessible within the context of the ephemeral message group **1104** prior to the ephemeral message group **1104** itself expiring in terms of the group duration parameter **1114**. The group duration parameter **1114**, group participation parameter **1116**, and message receiver identifier **1108** each provide input to a group timer **1118**, which operationally determines, firstly, whether a particular ephemeral message **1102** of the ephemeral message group **1104** will be displayed to a particular receiving user and, if so, for how long. Note that the ephemeral message group **1104** is also aware of the identity of the particular receiving user as a result of the message receiver identifier **1108**.

[0220] Accordingly, the group timer **1118** operationally controls the overall lifespan of an associated ephemeral message group **1104** as well as an individual ephemeral message **1102** included in the ephemeral message group **1104**. In some examples, each and every ephemeral message **1102** within the ephemeral message group **1104** remains viewable and accessible for a time period specified by the group duration parameter **1114**. In a further example, a certain ephemeral message **1102** may expire within the context of ephemeral message group **1104** based on a group participation parameter **1116**. Note that a message duration parameter **1106** may still determine the duration of time for which a particular ephemeral message **1102** is displayed to a receiving user, even within the context of the ephemeral message group **1104**. Accordingly, the message duration parameter **1106** determines the duration of time that a particular ephemeral message **1102** is displayed to a receiving user regardless of whether the receiving user is viewing that ephemeral message **1102** inside or outside the context of an ephemeral message group **1104**.

[0221] The messaging system **1112** may furthermore operationally remove a particular ephemeral message **1102** from the ephemeral message group **1104** based on a determination that it has exceeded an associated group participation parameter **1116**. For example, when a message sender has established a group participation parameter **1116** of **24** hours from posting, the messaging system **1112** will remove the relevant ephemeral message **1102** from the ephemeral message group **1104** after the specified **24** hours. The messaging system **1112** also operates to remove an ephemeral message group **1104** when either the group participation parameter **1116** for each and every ephemeral message **1102** within the ephemeral message group **1104** has expired, or when the ephemeral message group **1104** itself has expired in terms of the group duration parameter **1114**.

[0222] In certain use cases, a creator of a particular ephemeral message group **1104** may specify an indefinite group duration parameter **1114**. In this case, the expiration of the group participation parameter **1116** for the last remaining ephemeral message **1102** within the ephemeral message group **1104** will determine when the ephemeral message group **1104** itself expires. In this case, a new ephemeral message **1102**, added to the ephemeral message group **1104**, with a new group participation parameter **1116**, effectively extends the life of an ephemeral message group **1104** to equal the value of the group participation parameter **1116**.

[0223] Responsive to the messaging system **1112** determining that an ephemeral message group **1104** has expired (e.g., is no longer accessible), the messaging system **1112** communicates with the interactive platform **100** (and, for example, specifically the interaction client **104**) to cause an indicium (e.g., an icon) associated with the relevant ephemeral message group **1104** to no longer be displayed within a user interface of the interaction client **104**. Similarly, when the messaging system **1112** determines that the message duration parameter **1106** for a particular ephemeral message **1102** has expired, the messaging system **1112** causes the interaction client **104** to no longer display an indicium (e.g., an icon or textual identification) associated with the ephemeral message **1102**.

System Architecture

[0224] FIG. **12** is a block diagram illustrating further details regarding the interactive platform **100**, according to some examples. Specifically, the interactive platform **100** is shown to include the interaction client **104** and the Interactive servers **124**. The interactive platform **100** embodies multiple subsystems, which are supported on the client-side by the interaction client **104** and on the server-side by the Interactive servers **124**. Example subsystems are discussed below.

[0225] An image processing system **1202** provides various functions that enable a user to capture and augment (e.g., augment or otherwise modify or edit) media content associated with a message.

[0226] A camera system **1204** includes control software (e.g., in a camera application) that interacts with and controls hardware camera hardware (e.g., directly or via operating system controls) of the user system **102** to modify and augment real-time images captured and displayed via the interaction client **104**.

[0227] The augmentation system **1206** provides functions related to the generation and publishing of augmentations (e.g., media overlays) for images captured in real-time by cameras of the user system **102** or retrieved from memory of the user system **102**. For example, the augmentation system **1206** operatively selects, presents, and displays media overlays (e.g., an image filter or an image lens) to the interaction client **104** for the augmentation of real-time images received via the camera system **1204** or stored images retrieved from memory of a user system **102**. These augmentations are selected by the augmentation system **1206** and presented to a user of an interaction client **104**, based on a number of inputs and data, such as, but not limited to, geolocation of the user system **102**, and interactive platform information of the user of the user system **102**, and the like.

[0228] An augmentation may include audio and visual content and visual effects. Examples of audio and visual content include pictures, texts, logos, animations, and sound effects. An example of a visual effect includes color overlaying. The audio and visual content or the visual effects can be applied to a media content item (e.g., a photo or video) at user system **102** for communication in a message, or applied to video content, such as a video content stream or feed transmitted from an interaction client **104**. As such, the image processing system **1202** may interact with, and support, the various subsystems of the communication system **1208**, such as the messaging system **1210** and the video communication system **1212**.

[0229] A media overlay may include text or image data that can be overlaid on top of a photograph taken by the user system **102** or a video stream produced by the user system **102**. In some examples, the media overlay may be a location overlay (e.g., Venice beach), a name of a live event, or a name of a merchant overlay (e.g., Beach Coffee House). In further examples, the image processing system **1202** uses the geolocation of the user system **102** to identify a media overlay that includes the name of a merchant at the geolocation of the user system **102**. The media overlay may include other indicia associated with the merchant. The media overlays may be stored in the databases **128** and accessed through the database server **126**.

[0230] The image processing system **1202** provides a user-based publication platform that enables users to select a geolocation on a map and upload content associated with the selected geolocation. The user may also specify circumstances under which a particular media overlay should be offered to other users. The image processing system **1202** generates a media overlay that includes the uploaded content and associates the uploaded content with the selected geolocation.

[0231] The augmentation creation system **1214** supports augmented reality developer platforms and includes an application for content creators (e.g., artists and developers) to create and publish augmentations (e.g., augmented reality experiences) of the interaction client **104**. The augmentation creation system **1214** provides a library of built-in features and tools to content creators including, for example custom shaders, tracking technology, and templates.

[0232] In some examples, the augmentation creation system **1214** provides a merchant-based publication platform that enables merchants to select a particular augmentation associated with a geolocation via a bidding process. For example, the augmentation creation system **1214** associates a media overlay of the highest bidding merchant with a corresponding geolocation for a predefined amount of time.

[0233] A communication system **1208** is responsible for enabling and processing multiple forms of communication and interaction within the interactive platform **100** and includes a messaging system **1210**, a personal AI system **1230**, an audio communication system **1216**, and a video communication system **1212**. The messaging system **1210** is responsible for enforcing the temporary or time-limited access to content by the interaction clients **104**. The messaging system **1210** incorporates multiple timers within an ephemeral timer system (not shown) that, based on duration and display parameters associated with a message or collection of messages (e.g., a story), selectively enable access (e.g., for presentation and display) to messages and associated content via the interaction client **104**. Further details regarding the operation of the ephemeral timer system are provided below. The audio communication system **1216** enables and supports audio communications (e.g., real-time audio chat) between multiple interaction clients **104**. Similarly, the video communication system **1212** enables and supports video communications (e.g., real-time video chat) between multiple interaction clients **104**. The personal AI system **1230** is responsible for generating responses to prompts received from a user and communicating a response to the prompt.

[0234] A user management system **1218** is operationally responsible for the management of user data and profiles,

and maintains interactive platform information regarding relationships between users of the interactive platform **100**.

[0235] A collection management system **1220** is operationally responsible for managing sets or collections of media (e.g., collections of text, image video, and audio data). A collection of content (e.g., messages, including images, video, text, and audio) may be organized into an "event gallery" or an "event story." Such a collection may be made available for a specified time period, such as the duration of an event to which the content relates. For example, content relating to a music concert may be made available as a "story" for the duration of that music concert. The collection management system **1220** may also be responsible for publishing an icon that provides notification of a particular collection to the user interface of the interaction client **104**. The collection management system **1220** includes a curation function that allows a collection manager to manage and curate a particular collection of content. For example, the curation interface enables an event organizer to curate a collection of content relating to a specific event (e.g., delete inappropriate content or redundant messages). Additionally, the collection management system **1220** employs machine vision (or image recognition technology) and content rules to curate a content collection automatically. In certain examples, compensation may be paid to a user to include user-generated content into a collection. In such cases, the collection management system **1220** operates to automatically make payments to such users to use their content.

[0236] A map system **1222** provides various geographic location functions and supports the presentation of map-based media content and messages by the interaction client **104**. For example, the map system **1222** enables the display of user icons or avatars (e.g., stored in profile data **902**) on a map to indicate a current or past location of "friends" of a user, as well as media content (e.g., collections of messages including photographs and videos) generated by such friends, within the context of a map. For example, a message posted by a user to the interactive platform **100** from a specific geographic location may be displayed within the context of a map at that particular location to "friends" of a specific user on a map interface of the interaction client **104**. A user can furthermore share his or her location and status information (e.g., using an appropriate status avatar) with other users of the interactive platform **100** via the interaction client **104**, with this location and status information being similarly displayed within the context of a map interface of the interaction client **104** to selected users.

[0237] A game system **1224** provides various gaming functions within the context of the interaction client **104**. The interaction client **104** provides a game interface providing a list of available games that can be launched by a user within the context of the interaction client **104** and played with other users of the interactive platform **100**. The interactive platform **100** further enables a particular user to invite other users to participate in the play of a specific game by issuing invitations to such other users from the interaction client **104**. The interaction client **104** also supports audio, video, and text messaging (e.g., chats) within the context of gameplay, provides a leaderboard for the games, and also supports the provision of in-game rewards (e.g., coins and items).

[0238] An external resource system **1226** provides an interface for the interaction client **104** to communicate with remote servers (e.g., third-party servers **112**) to launch or access external resources, i.c., applications or applets. Each third-party server **112** hosts, for example, a markup language (e.g., HTML5) based application or a small-scale version of an application (e.g., game, utility, payment, or ride-sharing application). The interaction client **104** may launch a web-based resource (e.g., application) by accessing the HTML5 file from the third-party servers **112** associated with the web-based resource. Applications hosted by third-party servers **112** are programmed in JavaScript leveraging a Software Development Kit (SDK) provided by the Interactive servers **124**. The SDK includes APIs with functions that can be called or invoked by the web-based application. The Interactive servers **124** host a JavaScript library that provides a given external resource access to specific user data of the interaction client **104**. HTML5 is an example of technology for programming games, but applications and resources programmed based on other technologies can be used.

[0239] To integrate the functions of the SDK into the web-based resource, the SDK is downloaded by the third-party server **112** from the Interactive servers **124** or is otherwise received by the third-party server **112**. Once downloaded or received, the SDK is included as part of the application code of a web-based external resource. The code of the web-based resource can then call or invoke certain functions of the SDK to integrate features of the interaction client **104** into the web-based resource.

[0240] The SDK stored on the interactive server system **110** effectively provides the bridge between an external resource (e.g., applications **106** or applets) and the interaction client **104**. This gives the user a seamless experience of communicating with other users on the interaction client **104** while also preserving the look and feel of the interaction client **104**. To bridge communications between an external resource and an interaction client **104**, the SDK facilitates communication between third-party servers **112** and the interaction client **104**. A Web ViewJavaScriptBridge running on a user system **102** establishes two one-way communication channels between an external resource and the interaction client **104**. Messages are sent between the external resource and the interaction client **104** via these communication channels asynchronously. Each SDK function invocation is sent as a message and callback. Each SDK function is implemented by constructing a unique callback identifier and sending a message with that callback identifier.

[0241] By using the SDK, not all information from the interaction client **104** is shared with third-party servers **112**. The SDK limits which information is shared based on the needs of the external resource. Each third-party server **112** provides an HTML5 file corresponding to the web-based external resource to Interactive servers **124**. The Interactive servers **124** can add a visual representation (such as a box art or other graphic) of the web-based external resource in the interaction client **104**. Once the user selects the visual representation or instructs the interaction client **104** through a GUI of the interaction client **104** to access features of the web-based external resource, the interaction client **104** obtains the HTML5 file and instantiates the resources to access the features of the web-based external resource.

[0242] The interaction client **104** presents a graphical user interface (e.g., a landing page or title screen) for an external resource. During, before, or after presenting the landing page or title screen, the interaction client **104** determines

whether the launched external resource has been previously authorized to access user data of the interaction client **104**. In response to determining that the launched external resource has been previously authorized to access user data of the interaction client **104**, the interaction client **104** presents another graphical user interface of the external resource that includes functions and features of the external resource. In response to determining that the launched external resource has not been previously authorized to access user data of the interaction client **104**, after a threshold period of time (e.g., 3 seconds) of displaying the landing page or title screen of the external resource, the interaction client **104** slides up (e.g., animates a menu as surfacing from a bottom of the screen to a middle or other portion of the screen) a menu for authorizing the external resource to access the user data. The menu identifies the type of user data that the external resource will be authorized to use. In response to receiving a user selection of an accept option, the interaction client **104** adds the external resource to a list of authorized external resources and allows the external resource to access user data from the interaction client **104**. The external resource is authorized by the interaction client **104** to access the user data under an OAuth **2** framework.

[0243] The interaction client **104** controls the type of user data that is shared with external resources based on the type of external resource being authorized. For example, external resources that include full-scale applications (e.g., an application **106**) are provided with access to a first type of user data (e.g., two-dimensional avatars of users with or without different avatar characteristics). As another example, external resources that include small-scale versions of applications (e.g., web-based versions of applications) are provided with access to a second type of user data (e.g., payment information, two-dimensional avatars of users, three-dimensional avatars of users, and avatars with various avatar characteristics). Avatar characteristics include different ways to customize a look and feel of an avatar, such as different poses, facial features, clothing, and so forth.

[0244] An advertisement system **1228** operationally enables the purchasing of advertisements by third parties for presentation to end-users via the interaction clients **104** and also handles the delivery and presentation of these advertisements.

Software Architecture

[0245] FIG. **13** is a block diagram **1300** illustrating a software architecture **1302**, which can be installed on any one or more of the devices described herein. The software architecture **1302** is supported by hardware such as a machine **1304** that includes processors **1306**, memory **1308**, and I/O components **1310**. In this example, the software architecture **1302** can be conceptualized as a stack of layers, where each layer provides a particular functionality. The software architecture **1302** includes layers such as an operating system **1312**, libraries **1314**, frameworks **1316**, and applications **1318**. Operationally, the applications **1318** invoke API calls **1320** through the software stack and receive messages **1322** in response to the API calls **1320**.

[0246] The operating system **1312** manages hardware resources and provides common services. The operating system **1312** includes, for example, a kernel **1324**, services **1326**, and drivers **1328**. The kernel **1324** acts as an abstraction layer between the hardware and the other software layers. For example, the kernel **1324** provides memory management, processor management (e.g., scheduling), component management, networking, and security settings, among other functionalities. The services **1326** can provide other common services for the other software layers. The drivers **1328** are responsible for controlling or interfacing with the underlying hardware. For instance, the drivers **1328** can include display drivers, camera drivers, BLUETOOTH® or BLUETOOTH® Low Energy drivers, flash memory drivers, serial communication drivers (e.g., USB drivers), WI-FI® drivers, audio drivers, power management drivers, and so forth.

[0247] The libraries **1314** provide a common low-level infrastructure used by the applications **1318**. The libraries **1314** can include system libraries **1330** (e.g., C standard library) that provide functions such as memory allocation functions, string manipulation functions, mathematic functions, and the like. In addition, the libraries **1314** can include API libraries **1332** such as media libraries (e.g., libraries to support presentation and manipulation of various media formats such as Moving Picture Experts Group-4 (MPEG4), Advanced Video Coding (H.264 or AVC), Moving Picture Experts Group Layer-3 (MP3), Advanced Audio Coding (AAC), Adaptive Multi-Rate (AMR) audio codec, Joint Photographic Experts Group (JPEG or JPG), or Portable Network Graphics (PNG)), graphics libraries (e.g., an OpenGL framework used to render in two dimensions (2D) and three dimensions (3D) in a graphic content on a display), database libraries (e.g., SQLite to provide various relational database functions), web libraries (e.g., WebKit to provide web browsing functionality), and the like. The libraries **1314** can also include a wide variety of other libraries **1334** to provide many other APIs to the applications **1318**.

[0248] The frameworks **1316** provide a common high-level infrastructure that is used by the applications **1318**. For example, the frameworks **1316** provide various graphical user interface (GUI) functions, high-level resource management, and high-level location services. The frameworks **1316** can provide a broad spectrum of other APIs that can be used by the applications **1318**, some of which may be specific to a particular operating system or platform.

[0249] In an example, the applications **1318** may include a home application **1336**, a contacts application **1338**, a browser application **1340**, a book reader application **1342**, a location application **1344**, a media application **1346**, a messaging application **1348**, a game application **1350**, and a broad assortment of other applications such as a third-party application **1352**. The applications **1318** are programs that execute functions defined in the programs. Various programming languages can be employed to create one or more of the applications **1318**, structured in a variety of manners, such as object-oriented programming languages (e.g., Objective-C, Java, or C++) or procedural programming languages (e.g., C or assembly language). In a specific example, the third-party application **1352** (e.g., an application developed using the ANDROID™ or IOS™ software development kit (SDK) by an entity other than the vendor of the particular platform) may be mobile software running on a mobile operating system such as IOS™, ANDROID™, WINDOWS® Phone, or another mobile operating system. In this example, the third-party application **1352** can invoke the API calls **1320** provided by the operating system **1312** to facilitate functionalities described herein. Additional examples include:

[0250] Example 1 is a method comprising: receiving a user prompt from the user; determining a conversation history of one or more conversations between a user and a chatbot; generating an augmented prompt using the user prompt and the conversation history; communicating the augmented prompt to a generative AI model; receiving a response from the generative AI model to the augmented prompt; and providing the response to the user.

[0251] Example 2 is the subject matter of Example 1, wherein determining the conversation history comprises: retrieving, from a conversation history datastore, a conversation history of one or more conversations between a user and a chatbot.

[0252] Example 3 is the subject matter of any of Examples 1-2, further comprising: generating one or more summarized memories using the conversation history.

[0253] Example 4 is the subject matter of any of Examples 1-3, further comprising: generating one or more moderated memories using the summarized memories; and storing the one or more moderated memories into a memories datastore.

[0254] Example 5 is the subject matter of any of Examples 1-4, further comprising, receiving a request from the user to delete the conversation history; and in response to receiving the request, deleting the conversation history and one or more memories stored in the memories datastore associated with the conversation history.

[0255] Example 6 is the subject matter of any of Examples 1-5, wherein generating the augmented prompt comprises: generating a current conversation context from a current conversation between the user and the chatbot; retrieving, from the memories datastore, one or more stored memories using the current conversation context; and generating the augmented prompt using the one or more stored memories.

[0256] Example 7 is the subject matter of any of Examples 1-6, wherein the one or more memories stored in the memories datastore are isolated for a first conversation group, and wherein the one or more memories are not used to generate the augmented prompt for a second conversation group.

[0257] Example 8 is at least one machine-readable medium including instructions that, when executed by processing circuitry, cause the processing circuitry to perform operations to implement any of Examples 1-7.

[0258] Example 9 is an apparatus comprising means to implement any of Examples 1-7.

[0259] Example 10 is a system to implement any of Examples 1-7.

CONCLUSION

[0260] Changes and modifications may be made to the disclosed examples without departing from the scope of the present disclosure. These and other changes or modifications are intended to be included within the scope of the present disclosure.

GLOSSARY

[0261] "Carrier signal" refers to any intangible medium that is capable of storing, encoding, or carrying instructions for execution by the machine and includes digital or analog communications signals or other intangible media to facilitate communication of such instructions. Instructions may be transmitted or received over a network using a transmission medium via a network interface device.

[0262] "User device" refers to any machine that interfaces to a communications network to obtain resources from one or more server systems or other user devices. A user device may be, but is not limited to, a mobile phone, desktop computer, laptop, portable digital assistants (PDAs), smartphones, tablets, ultrabooks, netbooks, laptops, multi-processor systems, microprocessor-based or programmable consumer electronics, game consoles, set-top boxes, or any other communication device that a user may use to access a network.

[0263] "Communication network" refers to one or more portions of a network that may be an ad hoc network, an intranet, an extranet, a virtual private network (VPN), a local area network (LAN), a wireless LAN (WLAN), a wide area network (WAN), a wireless WAN (WWAN), a metropolitan area network (MAN), the Internet, a portion of the Internet, a portion of the Public Switched Telephone Network (PSTN), a plain old telephone service (POTS) network, a cellular telephone network, a wireless network, a Wi-Fi® network, another type of network, or a combination of two or more such networks. For example, a network or a portion of a network may include a wireless or cellular network, and the coupling may be a Code Division Multiple Access (CDMA) connection, a Global System for Mobile communications (GSM) connection, or other types of cellular or wireless coupling. In this example, the coupling may implement any of a variety of types of data transfer technology, such as Single Carrier Radio Transmission Technology (1xRTT), Evolution-Data Optimized (EVDO) technology, General Packet Radio Service (GPRS) technology, Enhanced Data rates for GSM Evolution (EDGE) technology, third Generation Partnership Project (3GPP) including 3G, fourth-generation wireless (4G) networks, Universal Mobile Telecommunications System (UMTS), High Speed Packet Access (HSPA), Worldwide Interoperability for Microwave Access (WiMAX), Long Term Evolution (LTE) standard, others defined by various standard-setting organizations, other long-range protocols, or other data transfer technology.

[0264] "Component" refers to a device, physical entity, or logic having boundaries defined by function or subroutine calls, branch points, APIs, or other technologies that provide for the partitioning or modularization of particular processing or control functions. Components may be combined via their interfaces with other components to carry out a machine process. A component may be a packaged functional hardware unit designed for use with other components and a part of a program that usually performs a particular function of related functions. Components may constitute either software components (e.g., code embodied on a machine-readable medium) or hardware components. A "hardware component" is a tangible unit capable of performing certain operations and may be configured or arranged in a certain physical manner. In various examples, one or more computer systems (e.g., a standalone computer system, a client computer system, or a server computer system) or one or more hardware components of a computer system (e.g., a processor or a group of processors) may be configured by software (e.g., an application or application portion) as a hardware component that operates to perform certain operations as described herein. A hardware component may also be implemented mechanically, electronically, or any suitable combination thereof. For example, a hardware component may include dedicated circuitry or logic

that is permanently configured to perform certain operations. A hardware component may be a special-purpose processor, such as a field-programmable gate array (FPGA) or an application-specific integrated circuit (ASIC). A hardware component may also include programmable logic or circuitry that is temporarily configured by software to perform certain operations. For example, a hardware component may include software executed by a general-purpose processor or other programmable processors. Once configured by such software, hardware components become specific machines (or specific components of a machine) uniquely tailored to perform the configured functions and are no longer general-purpose processors. It will be appreciated that the decision to implement a hardware component mechanically, in dedicated and permanently configured circuitry, or in temporarily configured circuitry (e.g., configured by software), may be driven by cost and time considerations. Accordingly, the phrase "hardware component" (or "hardware-implemented component") should be understood to encompass a tangible entity, be that an entity that is physically constructed, permanently configured (e.g., hardwired), or temporarily configured (e.g., programmed) to operate in a certain manner or to perform certain operations described herein. Considering examples in which hardware components are temporarily configured (e.g., programmed), each of the hardware components need not be configured or instantiated at any one instance in time. For example, where a hardware component comprises a general-purpose processor configured by software to become a special-purpose processor, the general-purpose processor may be configured as respectively different special-purpose processors (e.g., comprising different hardware components) at different times. Software accordingly configures a particular processor or processors, for example, to constitute a particular hardware component at one instance of time and to constitute a different hardware component at a different instance of time. Hardware components can provide information to, and receive information from, other hardware components. Accordingly, the described hardware components may be regarded as being communicatively coupled. Where multiple hardware components exist contemporaneously, communications may be achieved through signal transmission (e.g., over appropriate circuits and buses) between or among two or more of the hardware components. In examples in which multiple hardware components are configured or instantiated at different times, communications between such hardware components may be achieved, for example, through the storage and retrieval of information in memory structures to which the multiple hardware components have access. For example, one hardware component may perform an operation and store the output of that operation in a memory device to which it is communicatively coupled. A further hardware component may then, at a later time, access the memory device to retrieve and process the stored output. Hardware components may also initiate communications with input or output devices, and can operate on a resource (e.g., a collection of information). The various operations of example methods described herein may be performed, at least partially, by one or more processors that are temporarily configured (e.g., by software) or permanently configured to perform the relevant operations. Whether temporarily or permanently configured, such processors may constitute processor-implemented components that operate to perform one or more operations or functions described herein. As used herein, "processor-implemented component" refers to a hardware component implemented using one or more processors. Similarly, the methods described herein may be at least partially processor-implemented, with a particular processor or processors being an example of hardware. For example, at least some of the operations of a method may be performed by one or more processors or processor-implemented components. Moreover, the one or more processors may also operate to support performance of the relevant operations in a "cloud computing" environment or as a "software as a service" (SaaS). For example, at least some of the operations may be performed by a group of computers (as examples of machines including processors), with these operations being accessible via a network (e.g., the Internet) and via one or more appropriate interfaces (e.g., an API). The performance of certain of the operations may be distributed among the processors, not only residing within a single machine, but deployed across a number of machines. In some examples, the processors or processor-implemented components may be located in a single geographic location (e.g., within a home environment, an office environment, or a server farm). In other examples, the processors or processor-implemented components may be distributed across a number of geographic locations.

[0265] "Machine-readable storage medium" refers to both machine-storage media and transmission media. Thus, the terms include both storage devices/media and carrier waves/modulated data signals. The terms "computer-readable medium," "machine-readable medium" and "device-readable medium" mean the same thing and may be used interchangeably in this disclosure.

[0266] "Ephemeral message" refers to a message that is accessible for a time-limited duration. An ephemeral message may be a text, an image, a video and the like. The access time for the ephemeral message may be set by the message sender. Alternatively, the access time may be a default setting or a setting specified by the recipient. Regardless of the setting technique, the message is transitory.

[0267] "Machine storage medium" refers to a single or multiple storage devices and media (e.g., a centralized or distributed database, and associated caches and servers) that store executable instructions, routines and data. The term shall accordingly be taken to include, but not be limited to, solid-state memories, and optical and magnetic media, including memory internal or external to processors. Specific examples of machine-storage media, computer-storage media and device-storage media include non-volatile memory, including by way of example semiconductor memory devices, e.g., erasable programmable read-only memory (EPROM), electrically erasable programmable read-only memory (EEPROM), FPGA, and flash memory devices; magnetic disks such as internal hard disks and removable disks; magneto-optical disks; and CD-ROM and DVD-ROM disks The terms "machine-storage medium," "device-storage medium," "computer-storage medium" mean the same thing and may be used interchangeably in this disclosure. The terms "machine-storage media," "computer-storage media," and "device-storage media" specifically exclude carrier waves, modulated data signals, and other such media, at least some of which are covered under the term "signal medium."

[0268] "Non-transitory machine-readable storage medium" refers to a tangible medium that is capable of storing, encoding, or carrying the instructions for execution by a machine.

[0269] "Signal medium" refers to any intangible medium that is capable of storing, encoding, or carrying the instructions for execution by a machine and includes digital or analog communications signals or other intangible media to facilitate communication of software or data. The term "signal medium" shall be taken to include any form of a modulated data signal, carrier wave, and so forth. The term "modulated data signal" means a signal that has one or more of its characteristics set or changed in such a matter as to encode information in the signal. The terms "transmission medium" and "signal medium" mean the same thing and may be used interchangeably in this disclosure.

[0270] A "chatbot", also known as an interactive software application or digital agent, may refer to a computer-implemented system designed to engage with users through conversational interfaces using pre-determined scripts and/or artificial intelligence (AI) methodologies including but not limited to natural language processing (NLP), natural language understanding (NLU), and machine learning (ML). A chatbot may operate by receiving user inputs in the form of text or voice, processing these inputs according to algorithms and logic rules, interpreting the user's intent, and generating appropriate responses. The responses can range from simple, fixed text-based replies to complex, contextually relevant, and dynamic conversation flows. A chatbot may interact through various platforms such as web interfaces, mobile applications, social media messaging platforms, email, SMS, or other digital communication channels. Furthermore, a chatbot may be designed to perform specific tasks like answering queries, providing recommendations, executing transactions, or directing users to relevant resources based on user interaction. It may also employ user-specific personalization by incorporating user context, past interactions, and preferences, which may be stored in an associated data repository, into its decision-making processes. While a chatbot may function in standalone fashion, it can also be integrated with other software systems, databases, and services, including but not limited to customer relationship management (CRM) systems, content management systems (CMS), data management platforms (DMP), and other backend systems or third-party services, to access and exchange information, thereby extending its capabilities. This system may include one or more processors configured to execute instructions, stored in a memory component, for performing the various operations associated with receiving, processing, and responding to user inputs in a conversational manner.

[0271] A "memory" may refer, in the context of a conversational history on an interaction platform, to a synthesized representation of a user's past interactions, experiences, behaviors, and preferences as discerned from their communication record within the interactive platform. A memory representation may be constructed from the aggregation and analysis of conversational data points, including text inputs, response choices, dialogue duration, timestamp, frequency, context, sentiment, and any other accessible user-specific or interaction-related information. This data might be culled from various interaction channels such as instant messaging, voice or video calls, emails, social media interactions, or other digital communication interfaces offered by the platform. Inferred from these data points, a memory representation may encapsulate a user's recurring themes, topics of interest, sentiment trends, preferred interaction styles, and personal attributes. This information is intended to enrich the platform's understanding of the user, enabling more tailored, contextual, and effective interactions.

[0272] In this disclosure and appended claims, the terms "a" or "an" are used, as is common in patent documents, to include one or more than one, independent of any other instances or usages of "at least one" or "one or more." In this disclosure and appended claims, the term "or" is used to refer to a nonexclusive or, such that "A or B" includes "A but not B," "B but not A," and "A and B," unless otherwise indicated. In the appended claims, the terms "including" and "in which" are used as the plain-English equivalents of the respective terms "including" and "wherein." Also, in the appended claims, the terms "including" and "including" are open-ended; that is, a system, device, article, or process that includes elements in addition to those listed after such a term in a claim is still deemed to fall within the scope of that claim.

What is claimed is:

1. A method comprising:

receiving, by one or more processors, a user prompt from a user;

determining, by the one or more processors, a conversation history of one or more conversations between the user and a chatbot;

generating, by the one or more processors, an augmented prompt using the user prompt and the conversation history;

communicating, by the one or more processors, the augmented prompt to a generative AI model;

receiving, by the one or more processors, a response from the generative AI model to the augmented prompt; and

providing, by the one or more processors, the response to the user.

2. The method of claim **1**, wherein determining the conversation history comprises:

retrieving, from a conversation history datastore, a conversation history of one or more conversations between a user and a chatbot.

3. The method of claim **1**, further comprising:

generating one or more summarized memories using the conversation history.

4. The method of claim **3**, further comprising:

generating one or more moderated memories using the summarized memories; and

storing the one or more moderated memories into a memories datastore.

5. The method of claim **4**, further comprising,

receiving a request from the user to delete the conversation history; and

in response to receiving the request, deleting the conversation history and one or more memories stored in the memories datastore associated with the conversation history.

6. The method of claim **4**, wherein generating the augmented prompt comprises:

generating a current conversation context from a current conversation between the user and the chatbot;

retrieving, from the memories datastore, one or more stored memories using the current conversation context; and

generating the augmented prompt using the one or more stored memories.

7. The method of claim **6**, wherein the one or more memories stored in the memories datastore are isolated for a first conversation group, and

wherein the one or more memories are not used to generate the augmented prompt for a second conversation group.

8. A machine, comprising:

one or more processors; and

one or more memories storing instructions that, when executed by the one or more processors, cause the machine to perform operations comprising:

receiving, by one or more processors, a user prompt from a user;

determining, by the one or more processors, a conversation history of one or more conversations between the user and a chatbot;

generating, by the one or more processors, an augmented prompt using the user prompt and the conversation history;

communicating, by the one or more processors, the augmented prompt to a generative AI model;

receiving, by the one or more processors, a response from the generative AI model to the augmented prompt; and

providing, by the one or more processors, the response to the user.

9. The machine of claim **8**, wherein determining the conversation history comprises:

retrieving, from a conversation history datastore, a conversation history of one or more conversations between a user and a chatbot.

10. The machine of claim **8**, wherein the operations further comprise:

generating one or more summarized memories using the conversation history.

11. The machine of claim **10**, wherein the operations further comprise:

generating one or more moderated memories using the summarized memories; and

storing the one or more moderated memories into a memories datastore.

12. The machine of claim **11**, wherein the operations further comprise,

receiving a request from the user to delete the conversation history; and

in response to receiving the request, deleting the conversation history and one or more memories stored in the memories datastore associated with the conversation history.

13. The machine of claim **11**, wherein the operations further comprise:

generating a current conversation context from a current conversation between the user and the chatbot;

retrieving, from the memories datastore, one or more stored memories using the current conversation context; and

generating the augmented prompt using the one or more stored memories.

14. The machine of claim **13**, wherein the one or more memories stored in the memories datastore are isolated for a first conversation group, and

wherein the one or more memories are not used to generate the augmented prompt for a second conversation group.

15. A machine-storage medium storing machine-executable instructions that, when executed by a machine, cause the machine to perform operations comprising:

receiving a user prompt from a user;

determining a conversation history of one or more conversations between the user and a chatbot;

generating an augmented prompt using the user prompt and the conversation history;

communicating the augmented prompt to a generative AI model;

receiving a response from the generative AI model to the augmented prompt; and

providing the response to the user.

16. The machine-storage medium of claim **15**, wherein determining the conversation history comprises:

retrieving, from a conversation history datastore, a conversation history of one or more conversations between a user and a chatbot.

17. The machine-storage medium of claim **15**, wherein the operations further comprise:

generating one or more summarized memories using the conversation history.

18. The machine-storage medium of claim **17**, wherein the operations further comprise:

generating one or more moderated memories using the summarized memories; and

storing the one or more moderated memories into a memories datastore.

19. The machine-storage medium of claim **18**, wherein generating the augmented prompt comprises:

generating a current conversation context from a current conversation between the user and the chatbot;

retrieving, from the memories datastore, one or more stored memories using the current conversation context; and

generating the augmented prompt using the one or more stored memories.

20. The machine-storage medium of claim **19**, wherein the one or more memories stored in the memories datastore are isolated for a first conversation group, and

wherein the one or more memories are not used to generate the augmented prompt for a second conversation group.

* * * * *