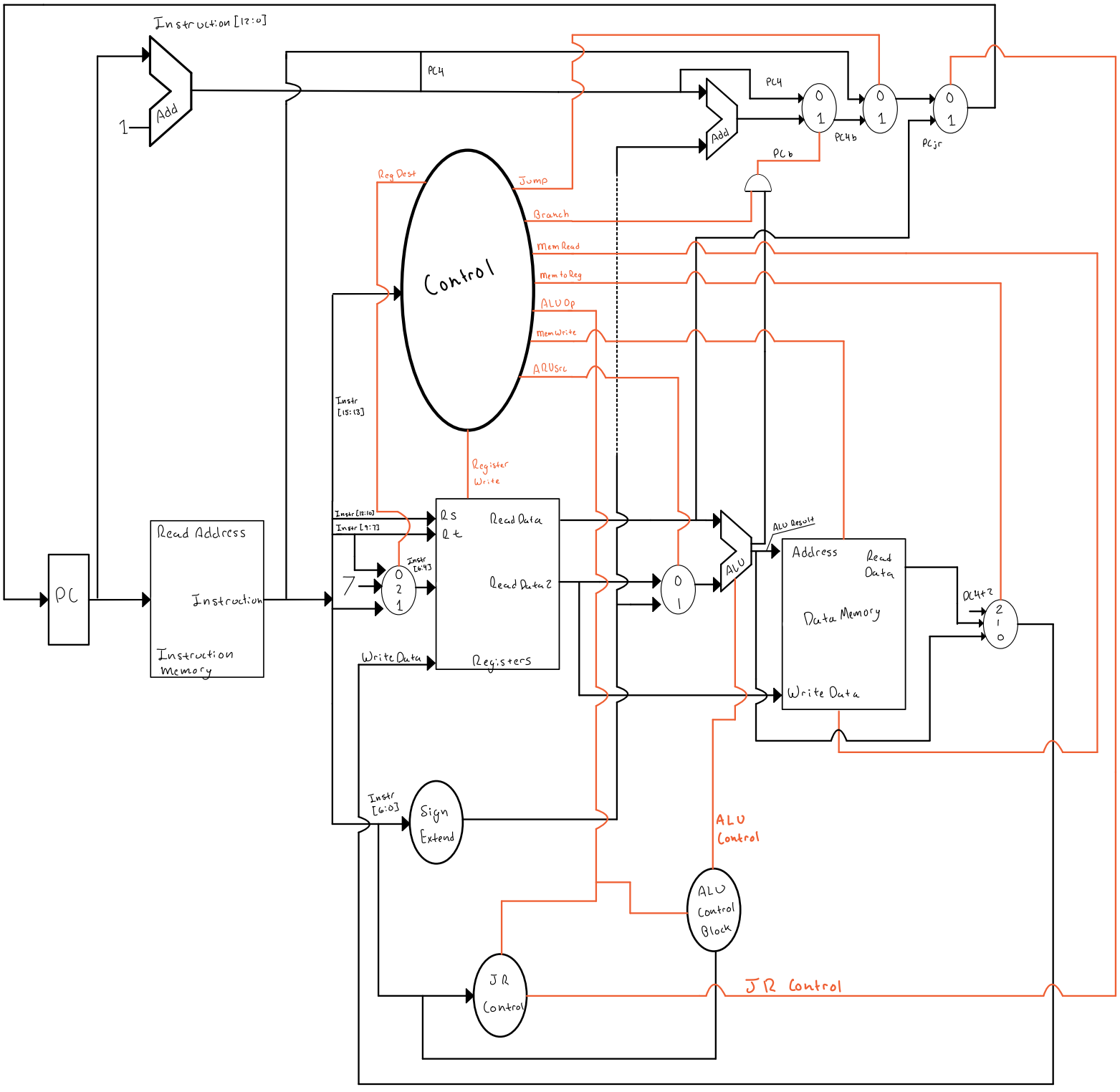
Instruction [12:0]
Add
1
PC4
Add
PC4
0
1
PC4b
0
1
PCjr
0
1
PCb
Reg Dest
Jump
Branch
MemRead
MemtoReg
ALUOp
MemWrite
ARUSrc
Control
Instr [15:13]
Register Write
Instr [12:10]
Instr [9:7]
Instr [6:4]
RS
Rt
Read Data
Read Data 2
Registers
7
0
2
1
Write Data
Read Address
Instruction
Instruction Memory
PC
0
1
ALU
ALU Result
Address
Read Data
Data Memory
Write Data
PC4+2
2
1
0
Instr [6:0]
Sign Extend
ALU Control
ALU Control Block
JR Control
JR Control

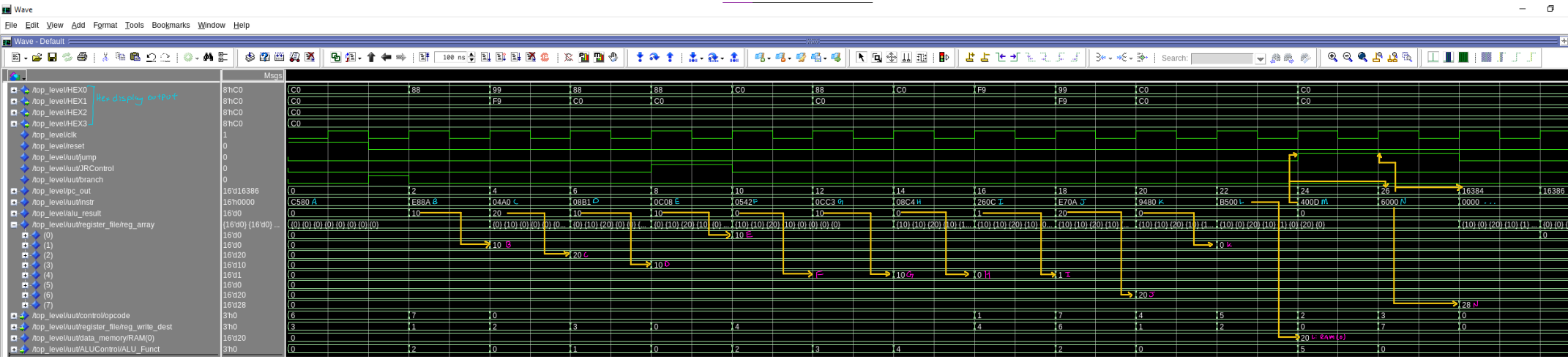
Wave
File Edit View Add Format Tools Bookmarks Window Help
Wave - Default
Msgs
hex display output
/top_level/HEX0 8'hC0
/top_level/HEX1 8'hC0
/top_level/HEX2 8'hC0
/top_level/HEX3 8'hC0
/top_level/clk 1
/top_level/reset 0
/top_level/uut/jump 0
/top_level/uut/JRControl 0
/top_level/uut/branch 0
/top_level/pc_out 16'd16386
/top_level/uut/instr 16'h0000
/top_level/alu_result 16'd0
/top_level/uut/register_file/reg_array {16'd0} {16'd0} ...
(0) 16'd0
(1) 16'd0
(2) 16'd20
(3) 16'd10
(4) 16'd1
(5) 16'd0
(6) 16'd20
(7) 16'd28
/top_level/uut/control/opcode 3'h0
/top_level/uut/register_file/reg_write_dest 3'h0
/top_level/uut/data_memory/RAM(0) 16'd20
/top_level/uut/ALUControl/ALU_Funct 3'h0