# Optimizing Pipeline Hazards

CS 2410

Wonsun Ahn

University of Pittsburgh

# Solving Structural Hazards

# Structural Hazard on Memory

- Two instructions need to use the same hardware at the same time.

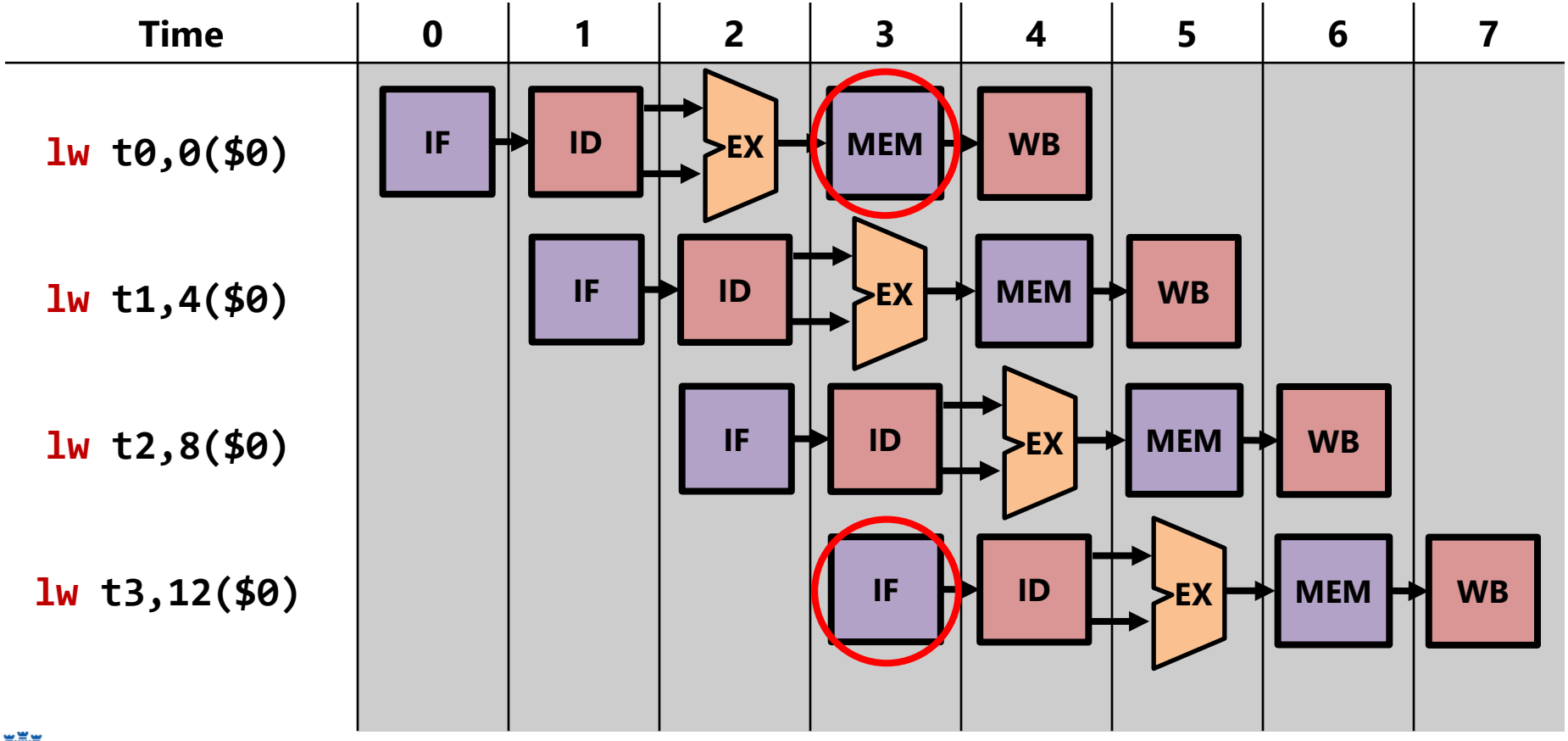

# What could we do??

- Two people need to use **one** sink at the same time
  - Well, in this case, it's memory but same idea

# We can do something similar!

- One option is to **wait** (a.k.a. **stall**).

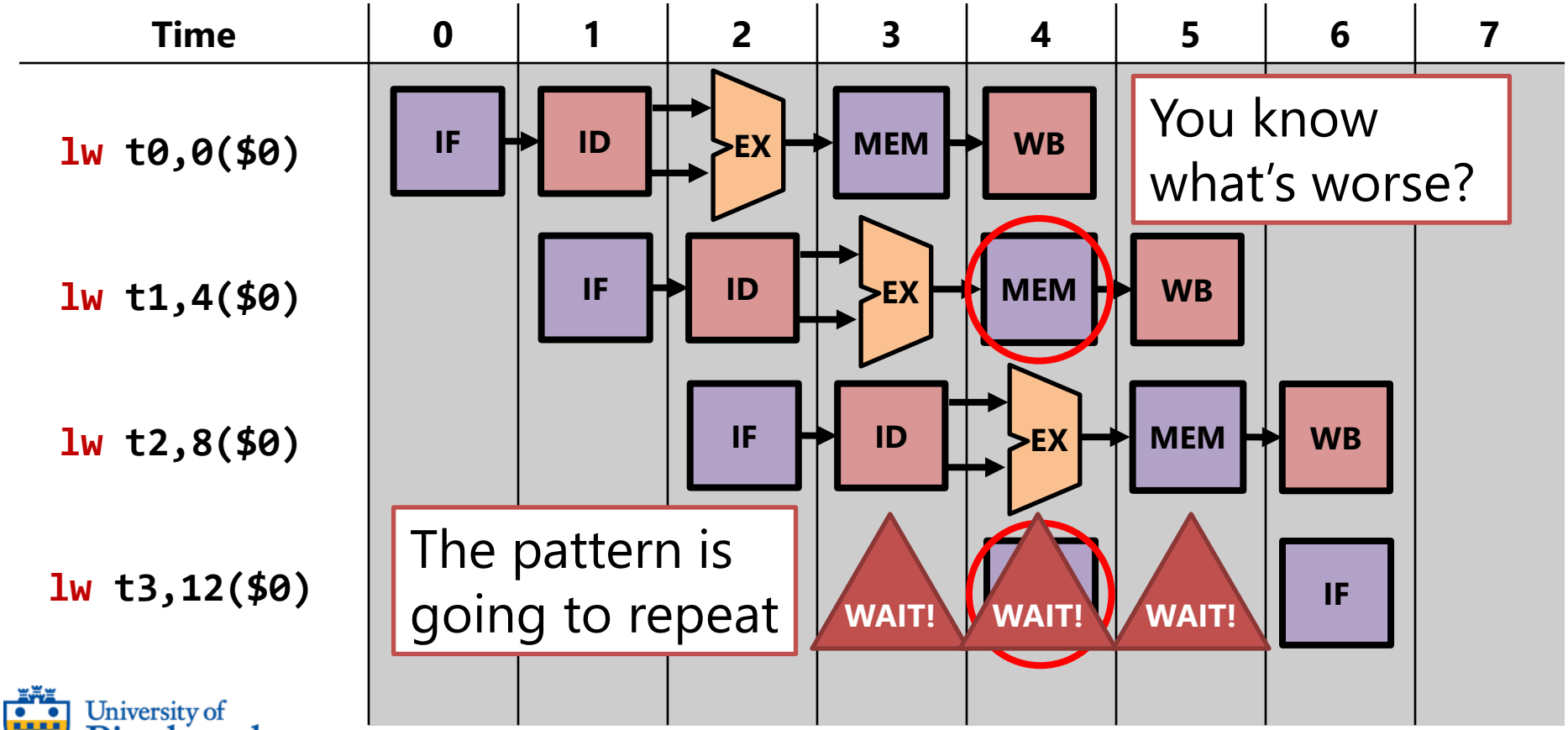

# Or we could throw in more hardware!

- For less commonly used CPU resources, stalling can work fine
- But memory (and some other things) is used **CONSTANTLY**
- How do the bathrooms solve this problem?
  - Throw in lots of sinks!
  - In other words, throw more hardware at the problem!
- Memory's a resource with a lot of ***contention***
  - So have two memories, one for instructions, and one for data!
  - Not literally but CPUs have separate ***instruction*** and ***data caches***

# Structural Hazard removed with two Memories

- With separate i-cache and d-cache, MEM and IF can work in parallel

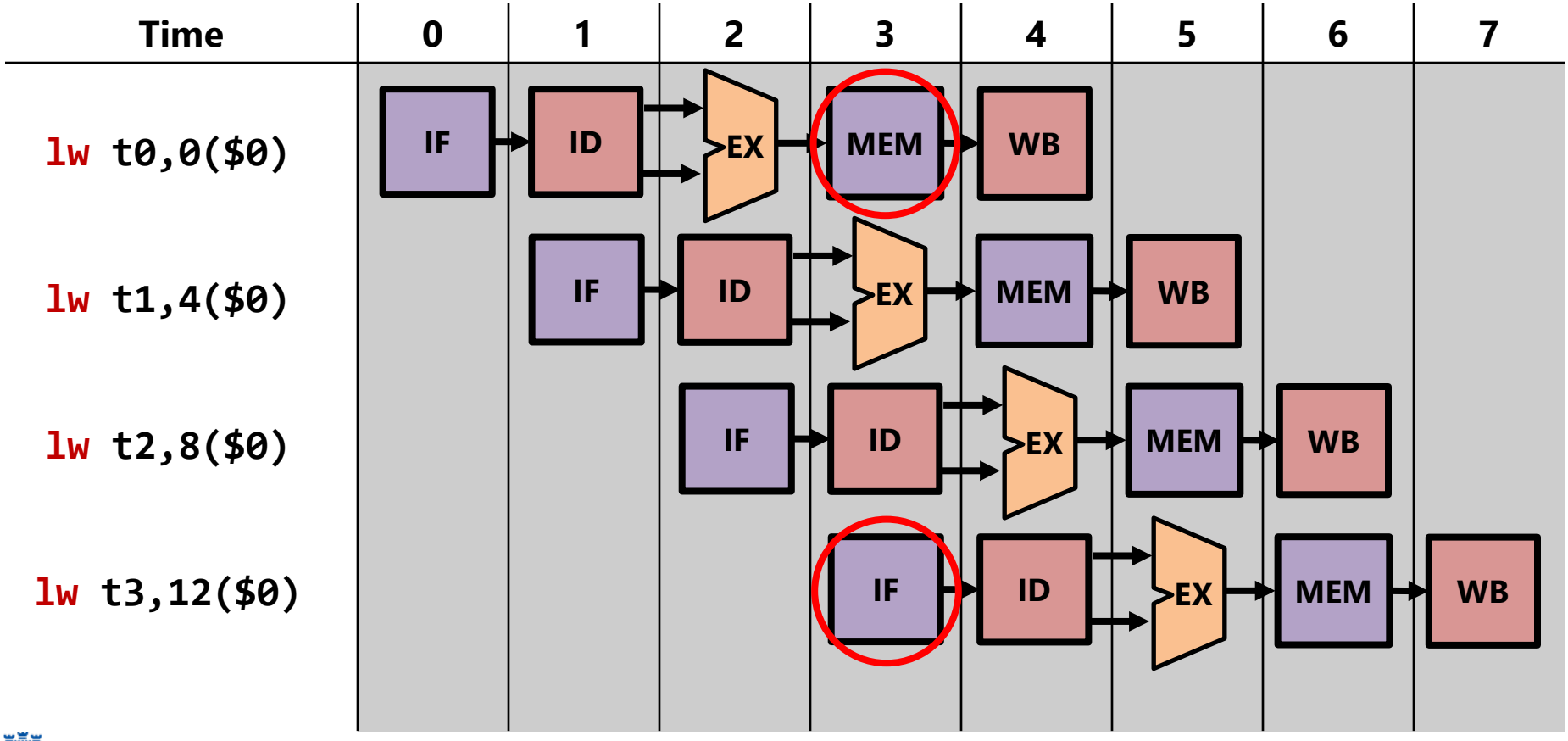

# Structural Hazard removed with two Memories

- But is that the only hardware duplication going on here?

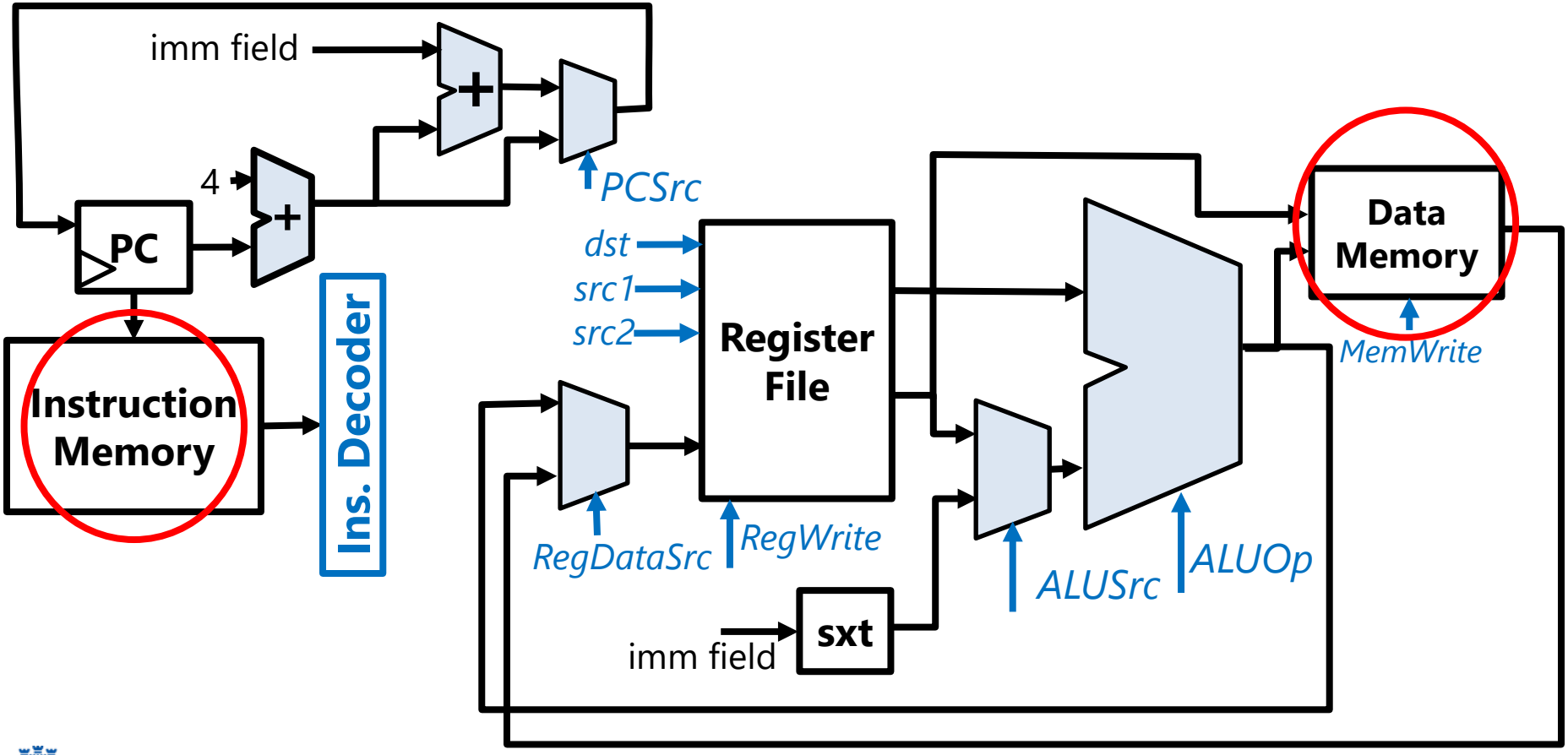

# Structural Hazards removed with Multiple Adders

- Why do we need 3 adders? To avoid stalls due to contention on ALU!

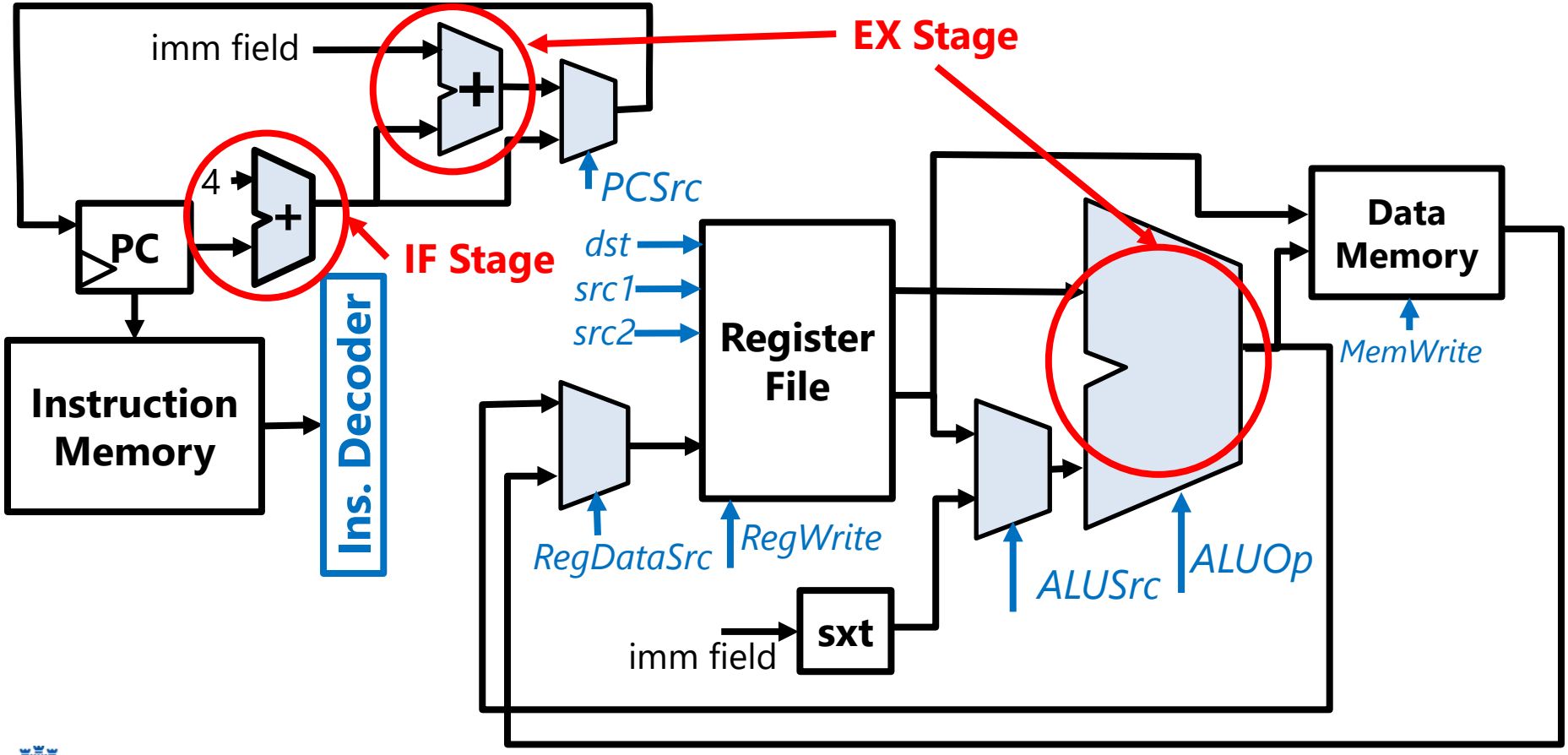

# Solving Structural Hazards

1. Structural hazards on computational resources are easy
   - Just duplicate the ALU resource!

2. Structural hazards on memory resources are harder
   - Memory (register files, caches) is too large to duplicate
   - Alternative is to create multi-ported memory (without duplication)
     - ***Port***: An interface that provides independent access to memory
     - Physical port: Extra decoder/wires for access to memory array
     - Pseudo port: A technique that emulates a physical port
       - Split instruction / data memory
       - Cache banking
       - Cache multi-pumping
   - We will revisit the topic when we talk about caches

# Solving Data Hazards

# Data Hazards

- An instruction depends on the output of a previous one.

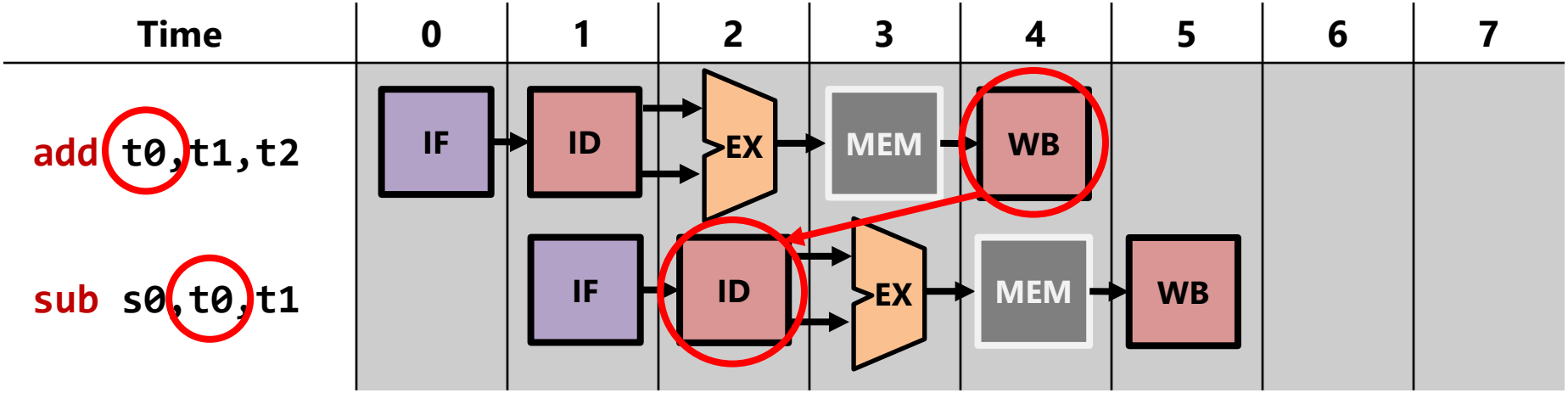


- When does **add** finish computing its sum?
- Well then… why not just *use the sum when we need it?*

# Solution 1: Data Forwarding

- Since we've pipelined control signals, we can check if instructions in the pipeline depend on each other (see if registers match).
- If we detect any dependencies, we can ***forward*** the needed data.

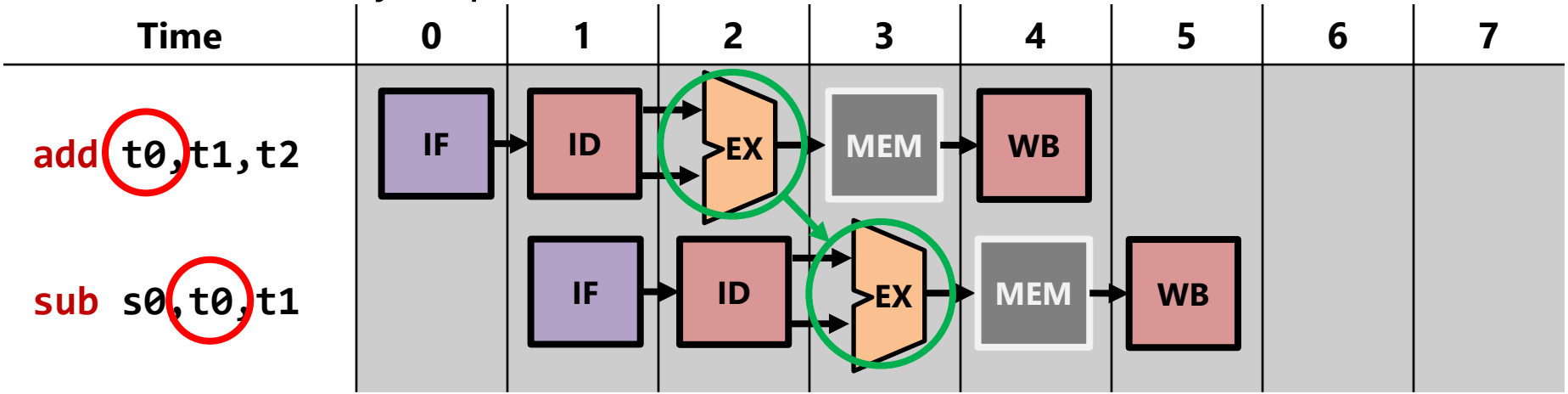


- This handles one kind of data forwarding…
- Where else can data come from and be written into registers?
  - Memory!

# Data Forwarding from Memory

- Well memory accesses happen a cycle later...
- What are we going to have to do?

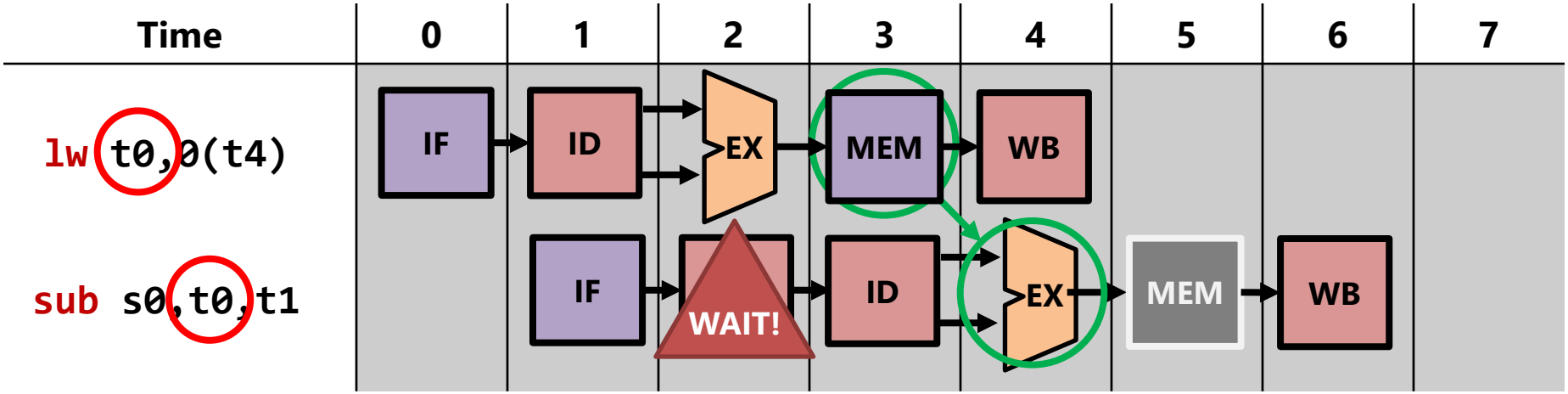


- This kind of stall is unavoidable in our current pipeline

# Forwarding Unit and Use-after-load-hazard

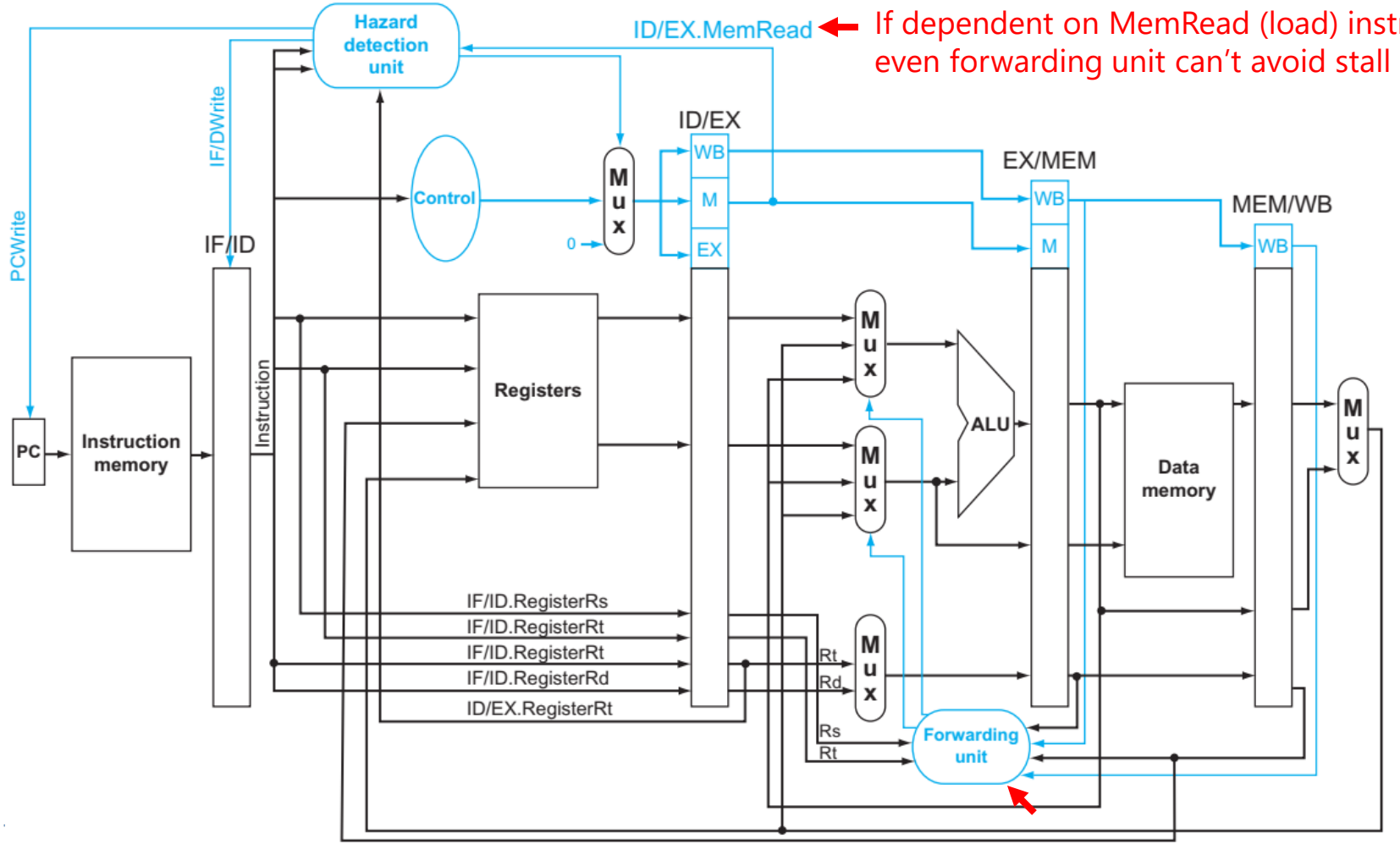

# ALU → ALU Data Forwarding removes all stalls

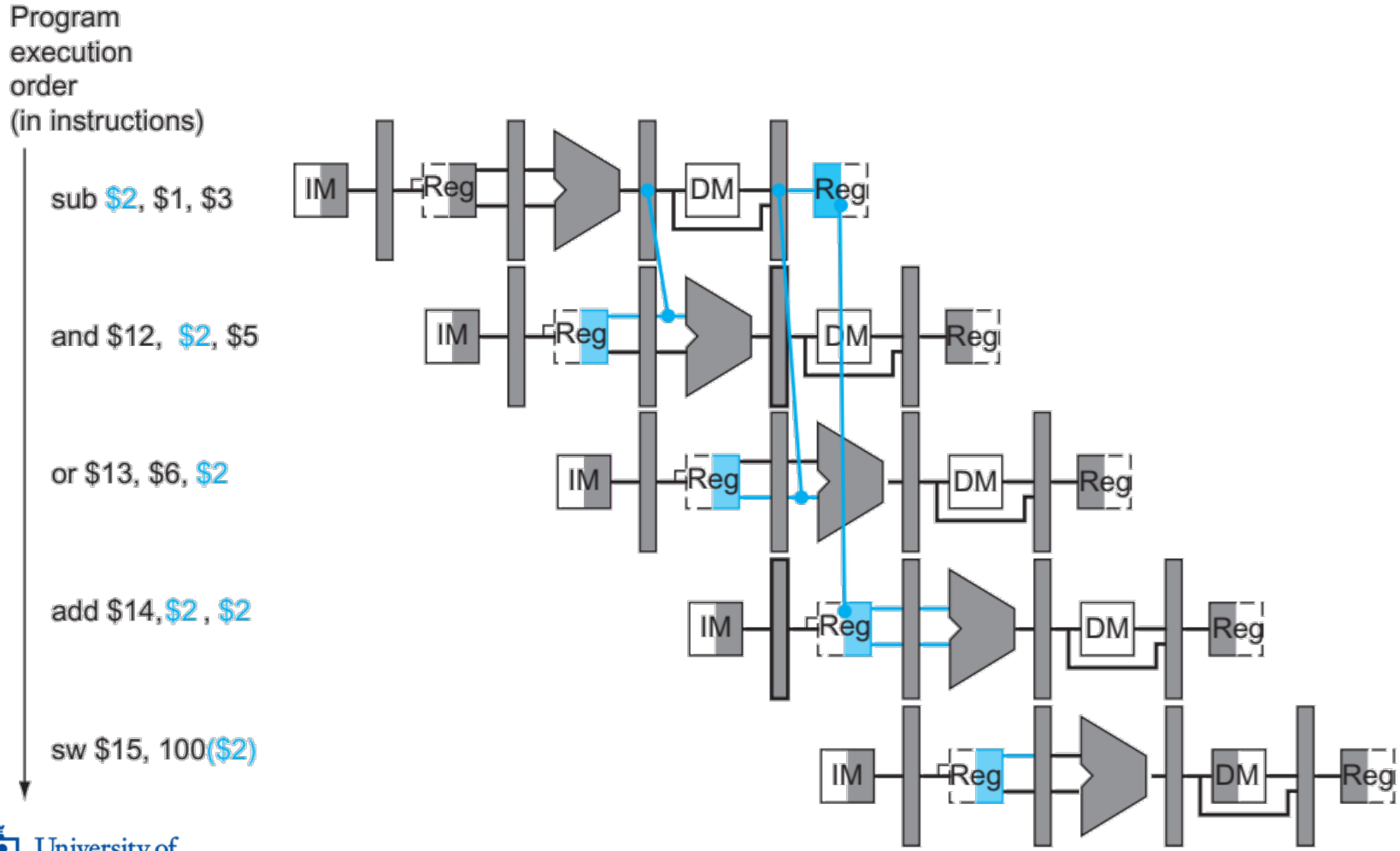

# MEM → ALU forwarding must stall on immediate use

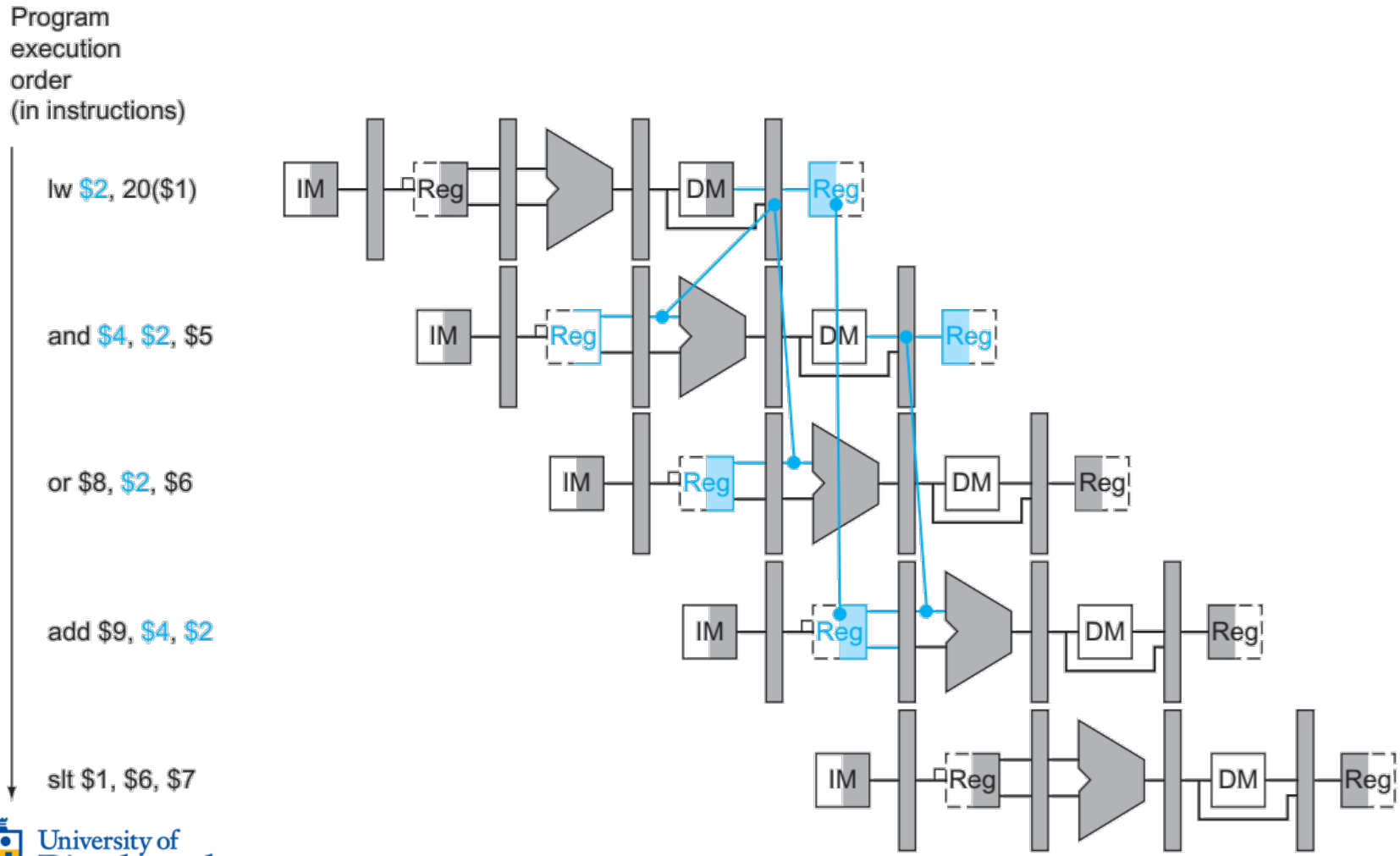

# MEM → ALU forwarding with bubble

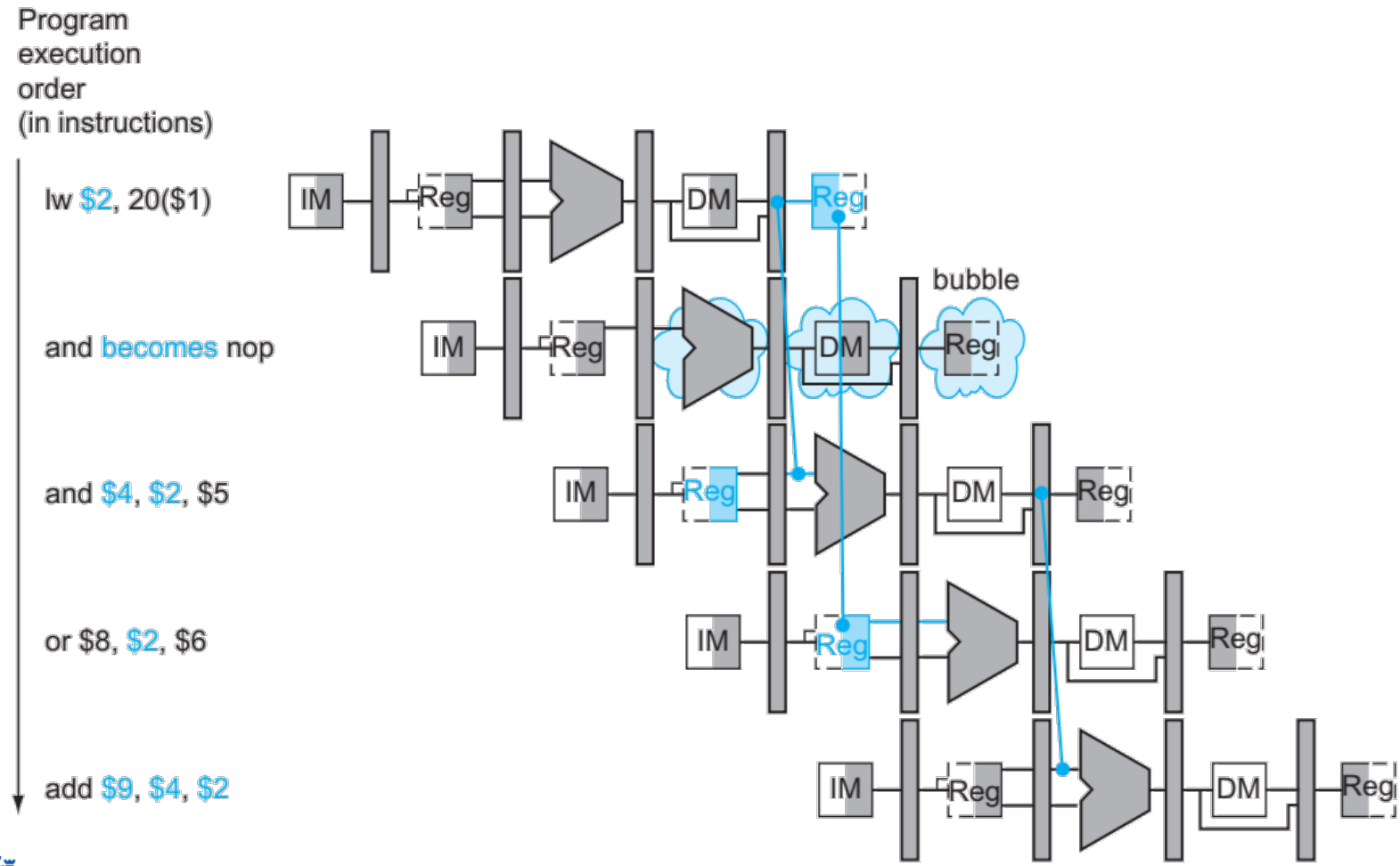

# How about MEM → MEM forwarding?

- Will this work with our current processor design?

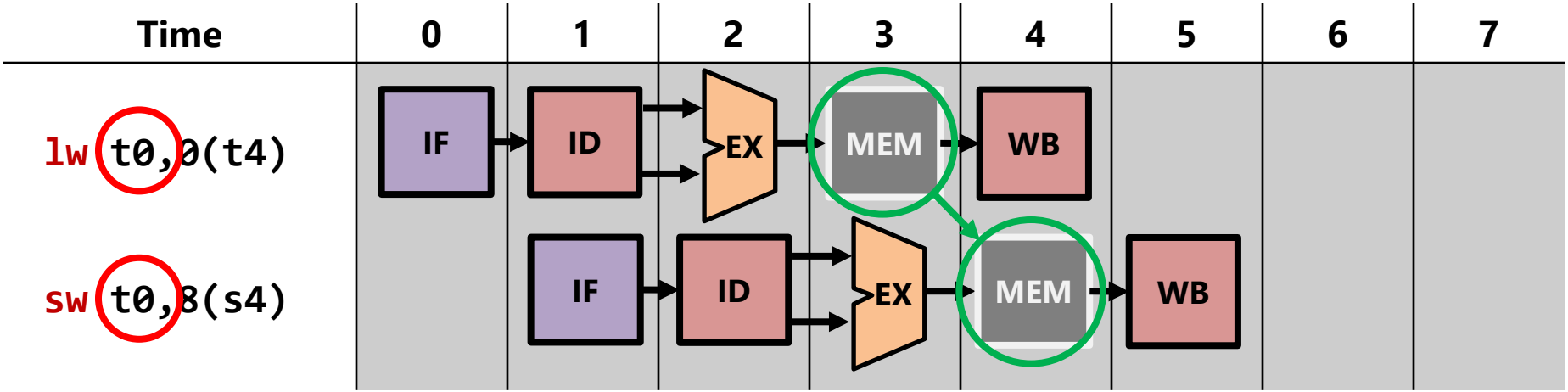

# Solution 2: Avoid stalls by reordering

- Let's say the following is your morning routine *(approx. 1 hour)*
  1. Have laundry running in washing machine *(30 minutes)*
  2. Dump laundry into basket
  3. Have tea boiling in the pot *(30 minutes)*
  4. Pour tea into cup

- Can you make this shorter? Yes! *(approx. 30 minutes)*
  1. Have laundry running in washing machine *(30 minutes)*
  3. Have tea boiling in the pot *(while machine is running)*
  2. Dump laundry into basket
  4. Pour tea into cup

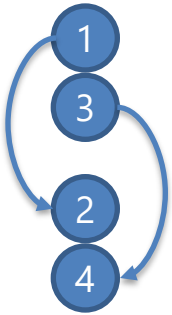


- Instructions can be **reordered** for a better schedule
  - As long as it doesn't break data dependencies

# Data Hazard removed through Compiler Reordering

- If the **compiler** has knowledge of how the pipeline works, it can **reorder** instructions to let loads complete before using their data.

| Time | 0 | 1 | 2 | 3 | 4 | 5 | 6 | 7 |
|---|---|---|---|---|---|---|---|---|
| `lw t0,0(t4)` | | | | | | | | |
| `sub s0,t0,t1` | | | | | | | | |
| `lw t2,4(t4)` | | | | | | | | |
| `sub s1,t2,t3` | | | | | | | | |

# Data Hazard removed through Compiler Reordering

- If the **compiler** has knowledge of how the pipeline works, it can **reorder** instructions to let loads complete before using their data.

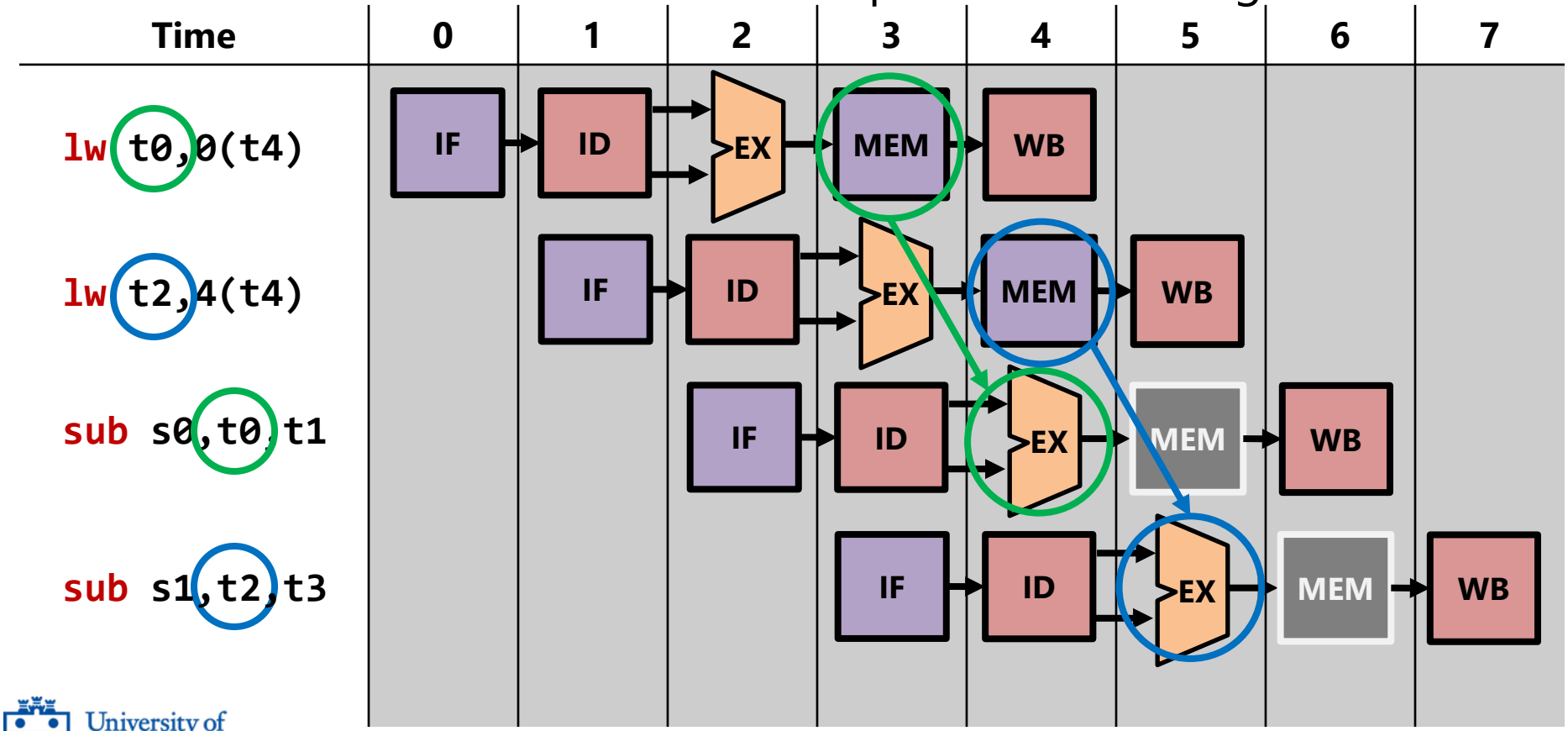

# Limits of Static Scheduling

- Reordering done by the compiler is called ***static scheduling***

- Static scheduling is a powerful tool but is in some ways **limited**
  - Again, compiler must make assumptions about pipeline
    - Length of MEM stage is very hard to predict by the compiler
    - Remember the **Memory Wall**?
  - Data dependencies are hard to figure out by a compiler
    - When data is in registers, trivial to figure out
    - When data is in memory locations, more difficult. Given:

```
lw t0,0(t4)
sw s0,8(t0)
lw t2,4(t4)
```

We want to reorder to remove the data hazard.
But what if 8(t0) and 4(t4) are the same addresses?
This involves *pointer analysis*, a notoriously difficult analysis!

# Dynamic scheduling is another option

- ***Dynamic scheduling*** is scheduling done by the CPU

- It doesn't have the limitations of static scheduling
  - It doesn't have to predict memory latency
    - It can adapt as things unfold
  - It's easy to figure out data dependencies, even memory ones
    - At runtime, addresses of 8(t0) and 4(t4) are easily calculated

- But at runtime it uses lots of power for the data analysis
  - … which again causes problems with the **Power Wall**
  - But more on this later

# Solving Control Hazards

# Loops

- Loops happen *all the time* in programs.

```
for(s0 = 0 .. 10)
    print(s0);
```

```
printf("done");
```

```
    li   s0, 0
top:
    move a0, s0
    jal  print
    addi s0, s0, 1
    blt  s0, 10, top
```

```
    la   a0, done_msg
    jal  printf
```

How often does this **blt** instruction go to **top**? How often does it go to the following **la** instruction?

# Pipeline Flushes at Every Loop Iteration

- The pipeline must be **flushed** every time the code loops back!

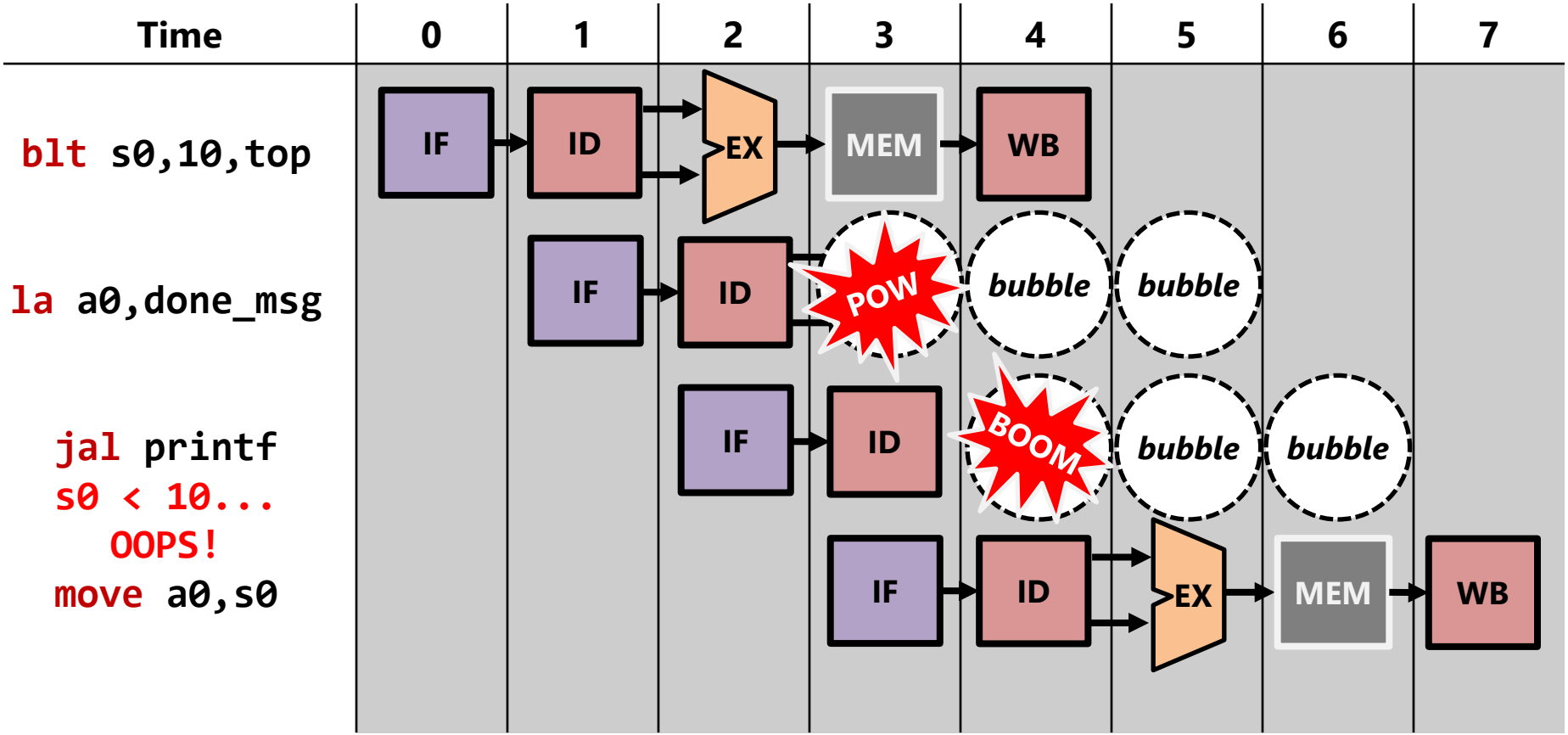

# Performance Impact from Control Hazards

- **Frequency** of flushes ∝ frequency of branches
  - If we have a tight loop, branches happen every few instructions
  - Typically, branches account for 15~20% of all instructions

- **Penalty** from one flush ∝ depth of pipeline
  - Number of flushed instructions == distance from IF to EX
  - What if **3** IF stages, **4** ID stages, and **3** EX stages? Penalty == 10!

- Current architectures can have more than 20 stages!
  - May spend more time just flushing instructions than doing work!
  - Another reason why deep pipelines are problematic

# Performance Impact from Control Hazards

- $CPI = CPI_{nch} + \alpha * \pi * K$
  - $CPI_{nch}$ : CPI with no control hazard
  - $\alpha$ : fraction of branch instructions in the instruction mix
  - $\pi$ : probability a branch is actually taken
  - K : penalty per pipeline flush

**Example:** If 20% of instructions are branches and the probability that a branch is taken is 50%, and pipeline flush penalty 7 cycles, then:

$$CPI = CPI_{nch} + 0.2 * 0.5 * 7 = CPI_{nch} + 0.7 \text{ cycles per instruction}$$

- What if we had a compiler insert no-ops, with no HDU?
  - It's even worse, as we will soon see.

# Compiler avoiding the control hazard without HDU

- Since compiler does not know direction, must always insert two nops

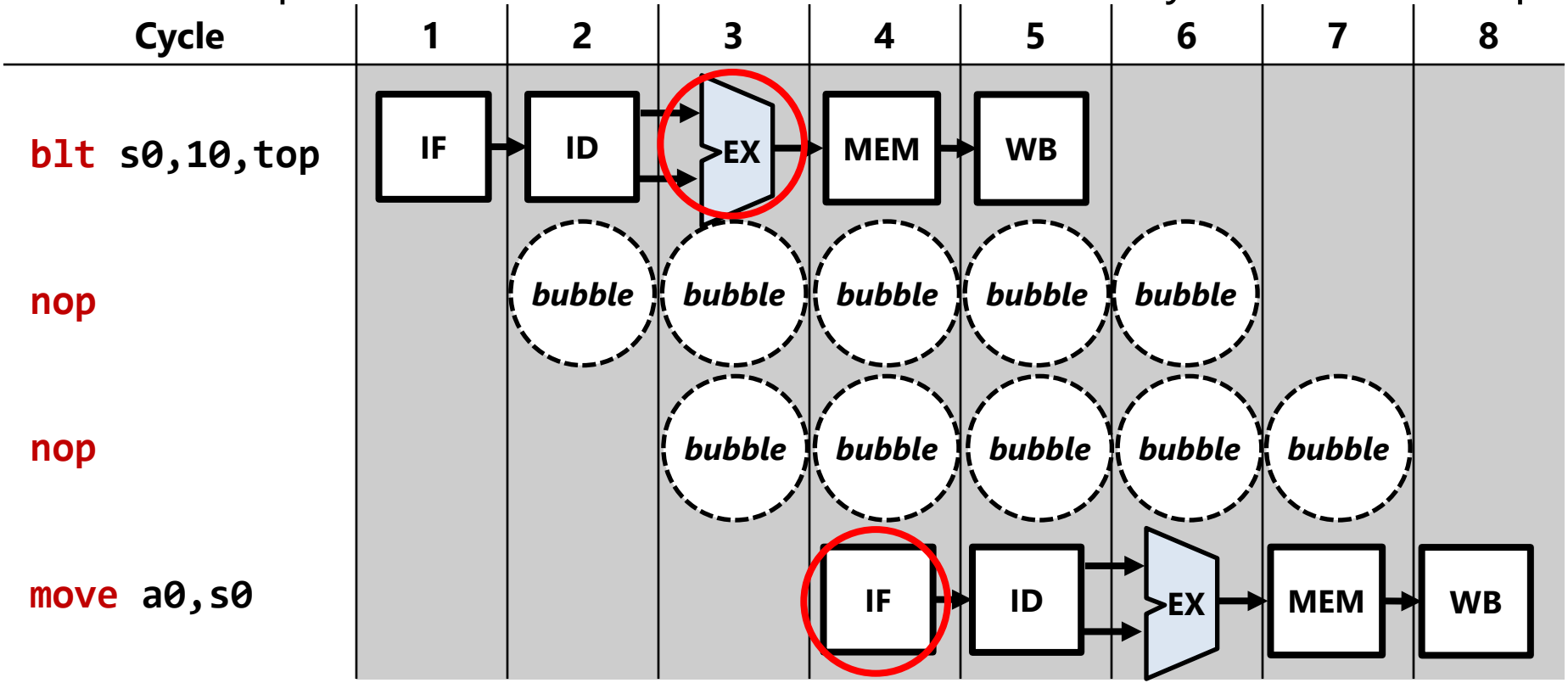

# Performance Impact without Hazard Detection Unit

- $CPI = CPI_{nch} + \alpha * K$
  - $CPI_{nch}$ : CPI with no control hazard
  - $\alpha$ : fraction of branch instructions in the instruction mix
  - K : no-ops inserted after each branch

**Example:** If 20% of instructions are branches and the probability that a branch is taken is 50%, and branch resolution delay of 7 no-ops, then:

$$CPI = CPI_{nch} + 0.2 * 7 = CPI_{nch} + 1.4 \text{ cycles per instruction}$$

  - Branch-taken rate is irrelevant - compiler always inserts two nops

- Is there a way to minimize the performance impact?

# Solution 1: Delay Slots

- Idea: Do **static scheduling** to replace nops with useful work
  - Remember? Compiler did the same for nops due to data hazards.

- ***Delay slot***: An instruction scheduling slot following a branch
  - Needs to execute while branch direction is getting resolved
    → Semantic: **executes regardless of branch direction**
  - ISA must be modified to support this branch semantic
  - Compiler must fill delay slot with control independent instruction
    - If not found, delay slot filled with nop instruction

# Compiler static scheduling using delay slots

```
  blt   s0, 10, else
  nop   # Delay slot
then:
  add   t0, t1, t0
  j     merge
else:
  add   t1, t1, t0
merge:
  addi  t2, t2, 1
```

```
  blt   s0, 10, else
  addi  t2, t2, 1   # Slot
then:
  add   t0, t1, t0
  j     merge
else:
  add   t1, t1, t0
merge:
  …
```

- The **addi** instruction is moved into delay slot
  - It is not control dependent on the branch outcome of **blt**
  - It is not data dependent on registers **t0** or **t1**

University of Pittsburgh

# Delay slots are losing popularity

- Sounded like a good idea on paper but didn't work well in practice

1. Turns out filling delay slots with the compiler is not always easy
   - Often data and control independent instructions don't exist

2. Delay slots baked into the ISA were not future proof
   - Number of delay slots did not match new generation of CPUs
   - New generation of CPUs had fancier ways to avoid bubbles
   - Delays slots ended up being a hindrance

- Next idea please!

# Solution 2: MORE SINKS! (a.k.a. hardware)

# Do we *reeeally* need to compare at EX stage?

- What if branch comparison was done at the ID stage, not EX stage?

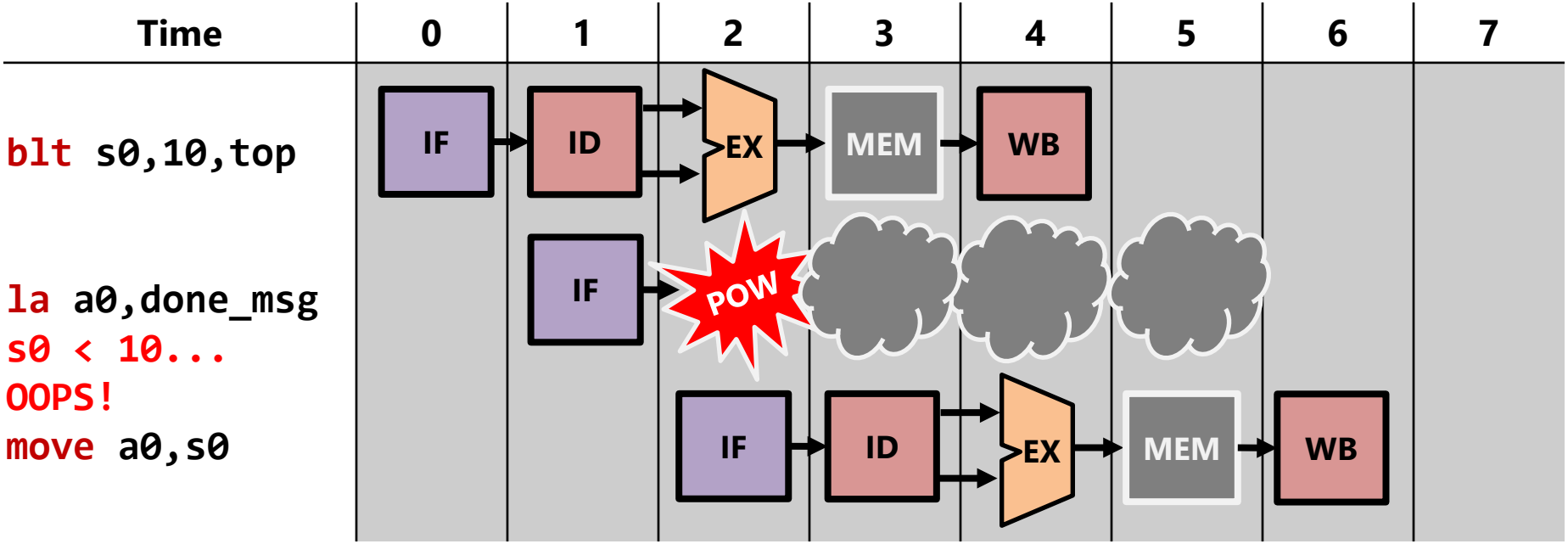


- Reduced penalty from 2 cycles → 1 cycle!
- But of course that means we need a comparator at the ID stage

# Solution 2: MORE SINKS! (a.k.a. hardware)

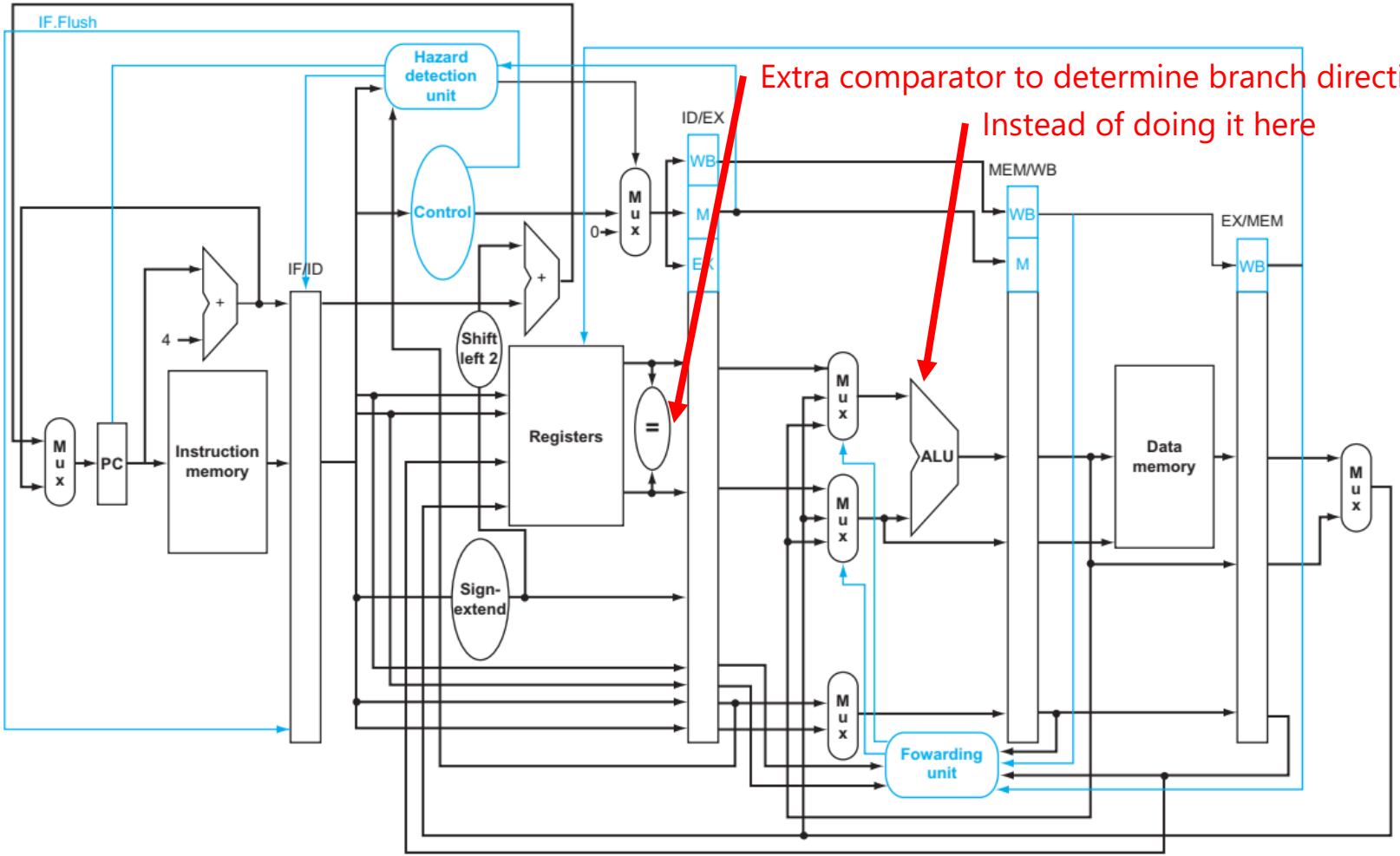

# Not all sunshine and rainbows

- **Extra delay on data hazards**. Used to have no delay:

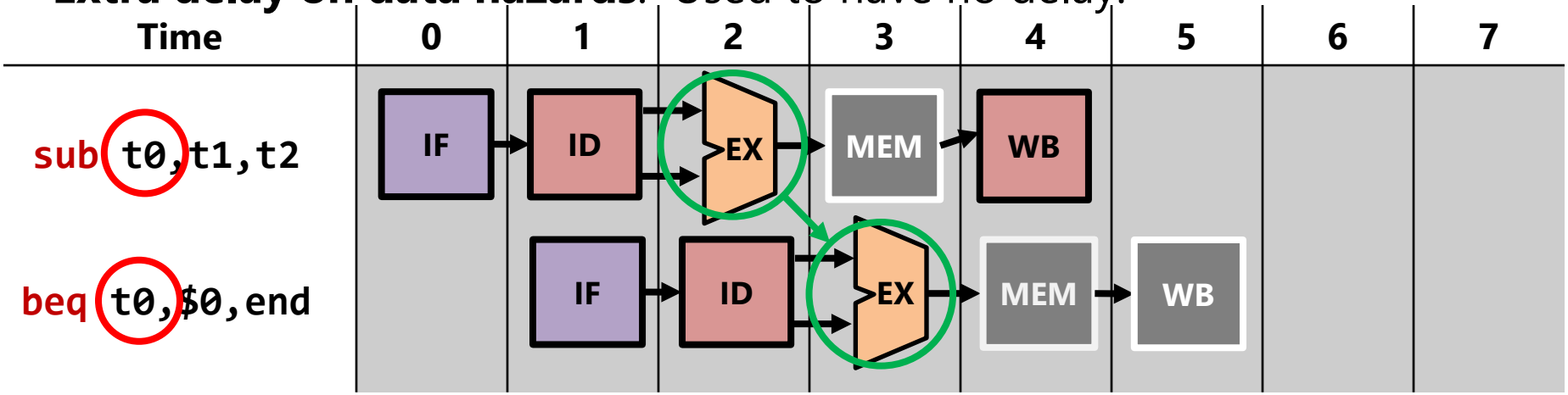


- Now we need to insert one bubble even with forwarding:

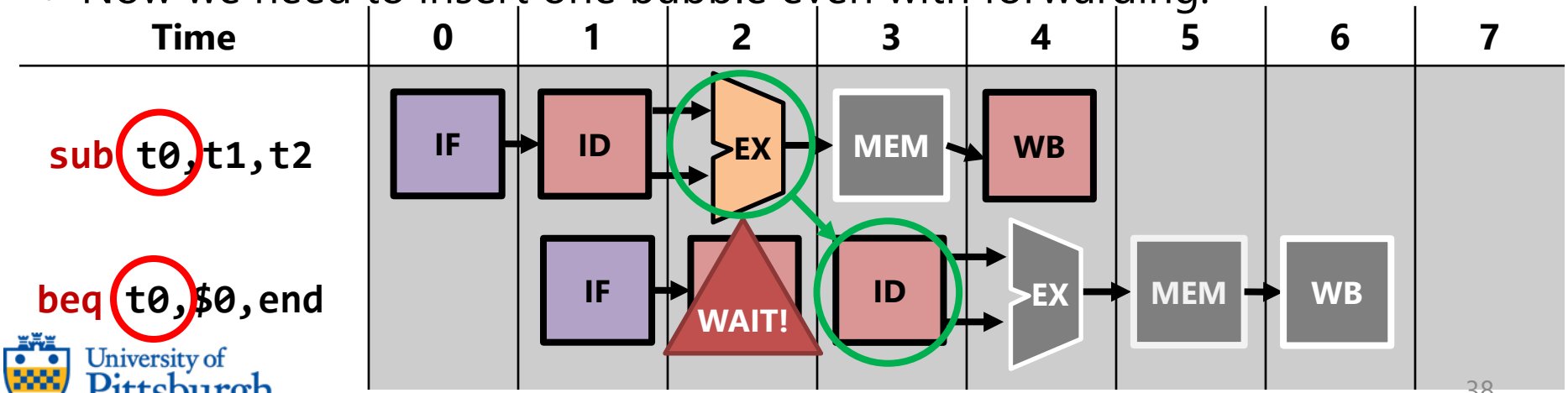


University of Pittsburgh

# Not all sunshine and rainbows

- Extra delay on data forwarded from `lw` also:

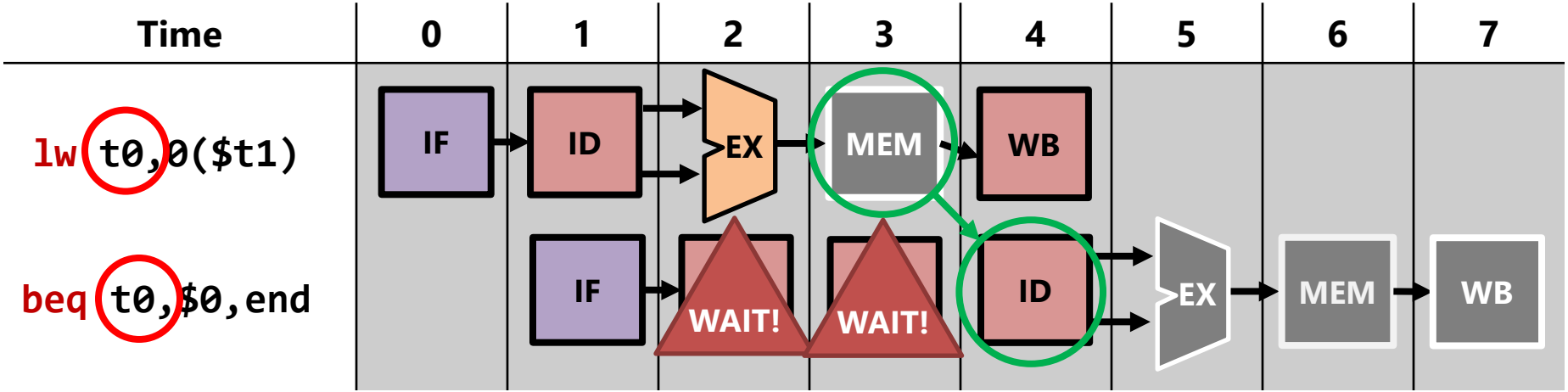


- Now we must insert two bubbles instead of one!
- Not to mention we must now add **more forwarding paths**:
  - **EX → ID**, **MEM → ID**
- We also need to add MUXes before our new comparator

# Not all sunshine and rainbows

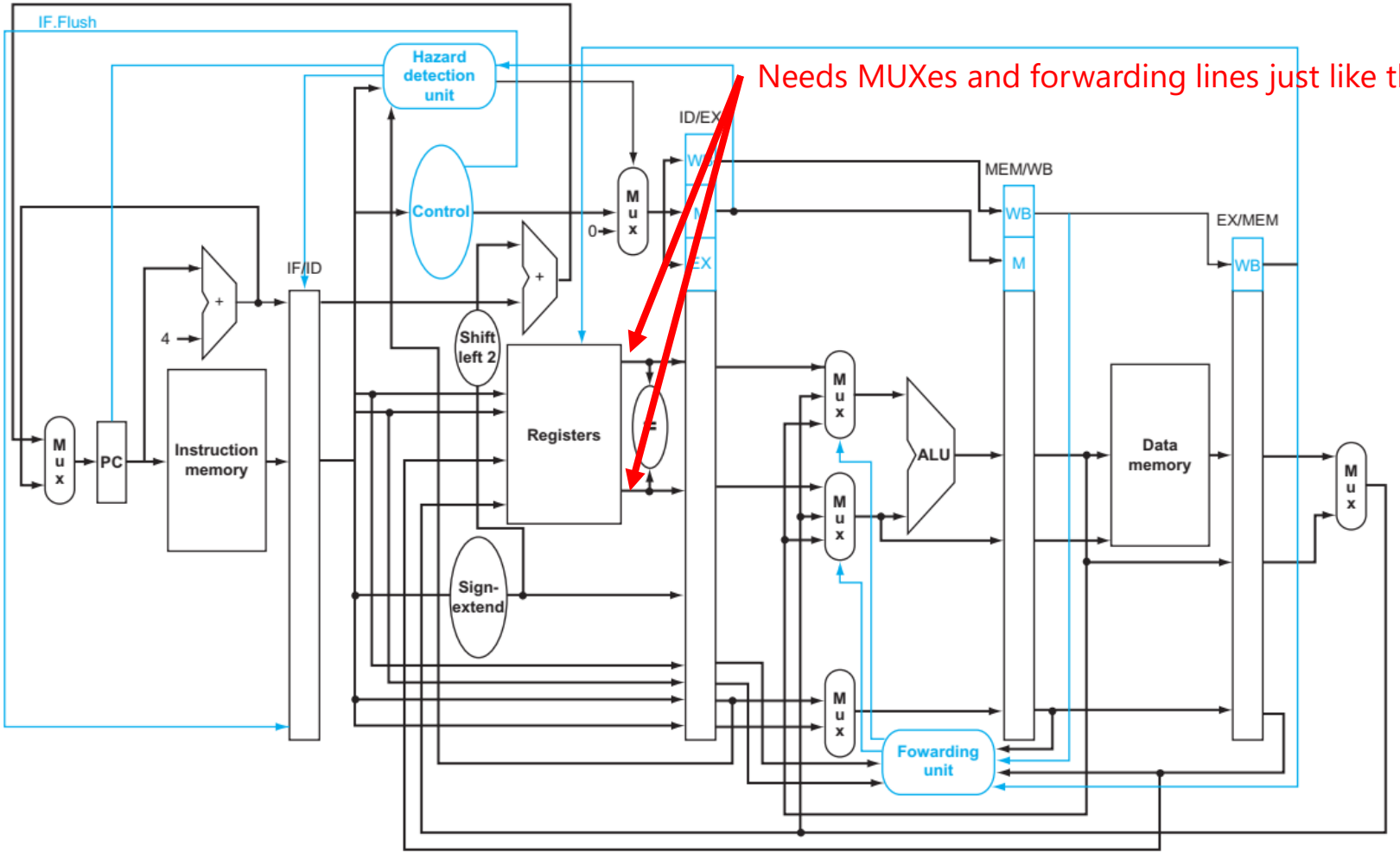

# Limits of Pipelining

# Increasing pipeline depth has diminishing returns

- In terms of clock frequency
  - Delay of pipeline latches becomes big portion of cycle time
  - Unbalanced stages (due to both design and manufacturing)
- In terms of utilization (CPI)
  - Due to data hazards

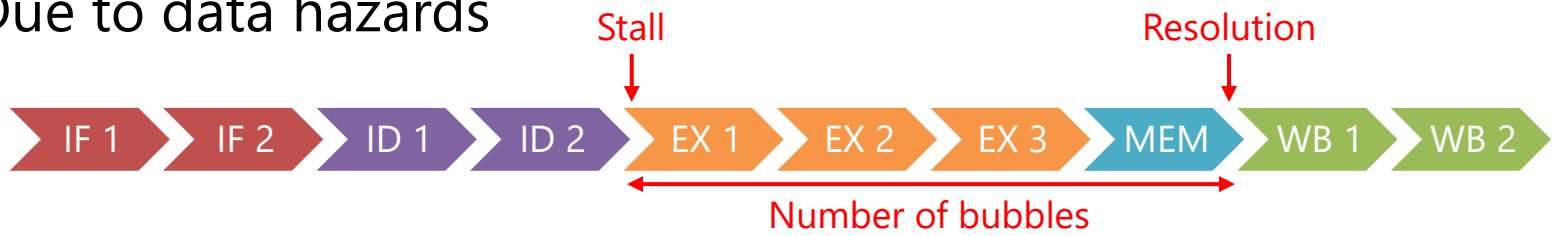


→ Mitigated through **instruction reordering** (but **Power Wall**)

  - Due to control hazards

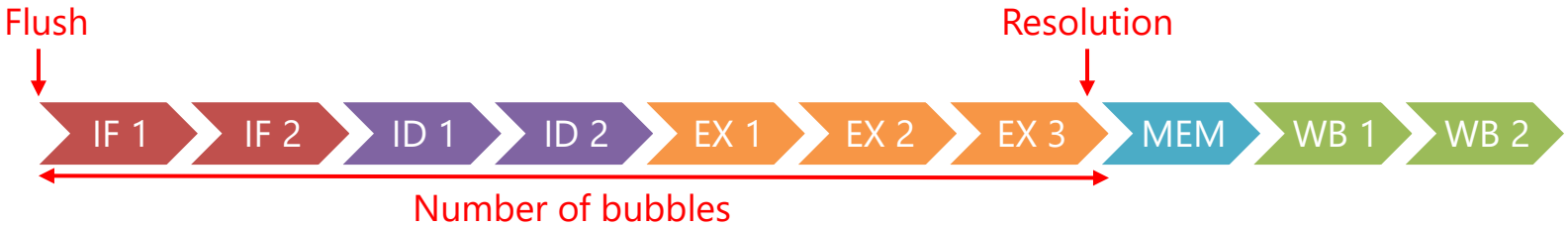


→ How do we mitigate this? Through **branch prediction**.