SuperScalar Processors

CS 2410

Wonsun Ahn

University of Pittsburgh

In-order vs. Out-of-order superscalars

- **Superscalar**: a wide-issue processor that does dynamic scheduling
  - Extracts instruction level parallelism (ILP) within the processor

- **In-order** superscalar: **does not reorder** instructions
  - Only detects hazards between instructions to insert bubbles
  - Only extracts ILP that arises from given ordering of instructions
  - Relies on compiler scheduler to reorder instructions for performance

- **Out-of-order** superscalar: **does reorder** instructions
  - Reorders instructions to remove hazards and increase utilization
  - Typically results in higher performance compared to in-order
  - But dynamic reordering adds to power and cycle time

- We will discuss out-of-order superscalars in this chapter

Name of the game is still ILP

- The processor internally constructs the data dependency graph
- The processor tries to take advantage of ILP as much as possible
  - By executing the red nodes in parallel with the blue nodes

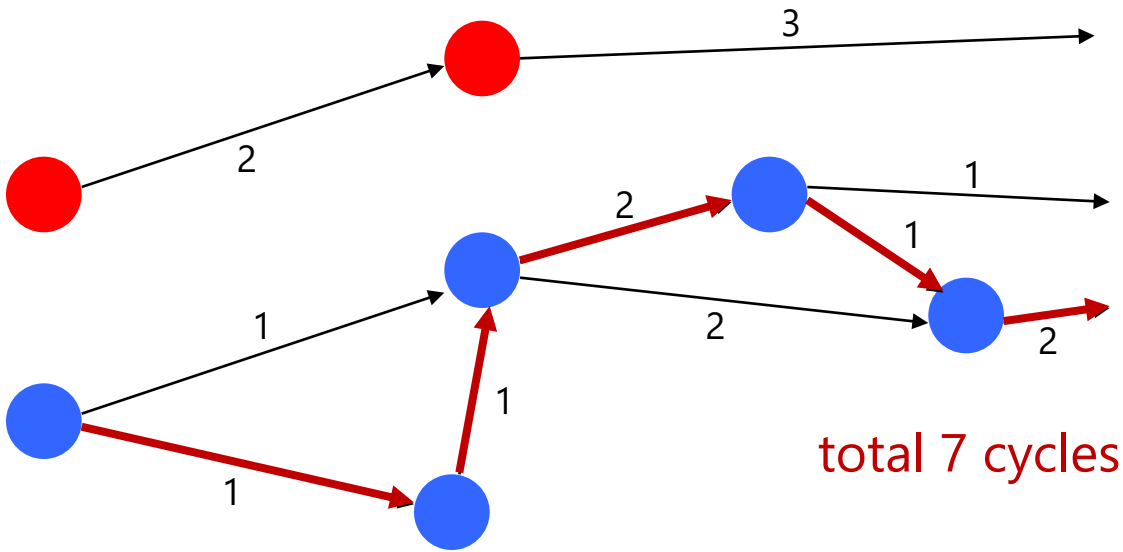

illustration courtesy of Dr. Melhem

Issue Queue

- In order to expose ILP, superscalars need a big **instruction window**
  - Just like the compiler did for VLIWs
  - HW structure for storing instructions is called ***issue queue***
  - Instructions **queue in-order** but can **execute out-of-order**

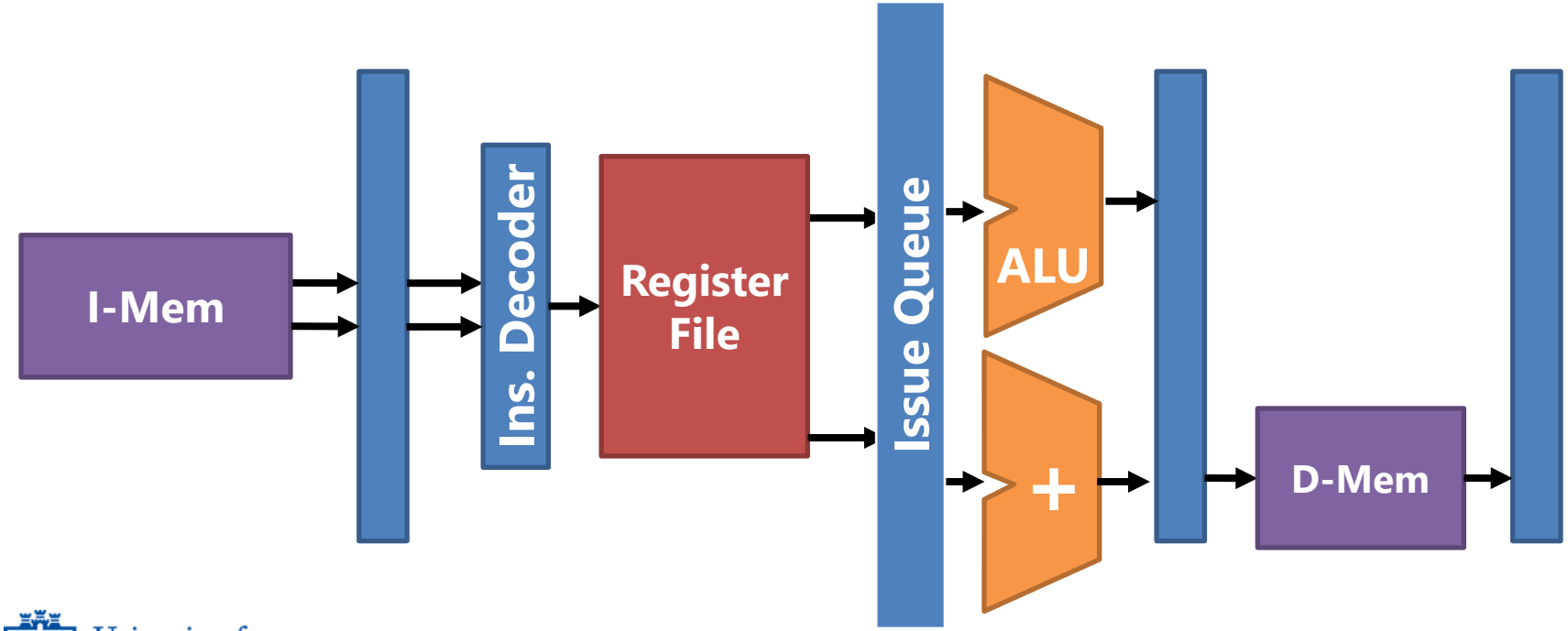

Issue Queue

- In order to expose ILP, superscalars need a big **instruction window**
  - Just like the compiler did for VLIWs
  - HW structure for storing instructions is called ***issue queue***

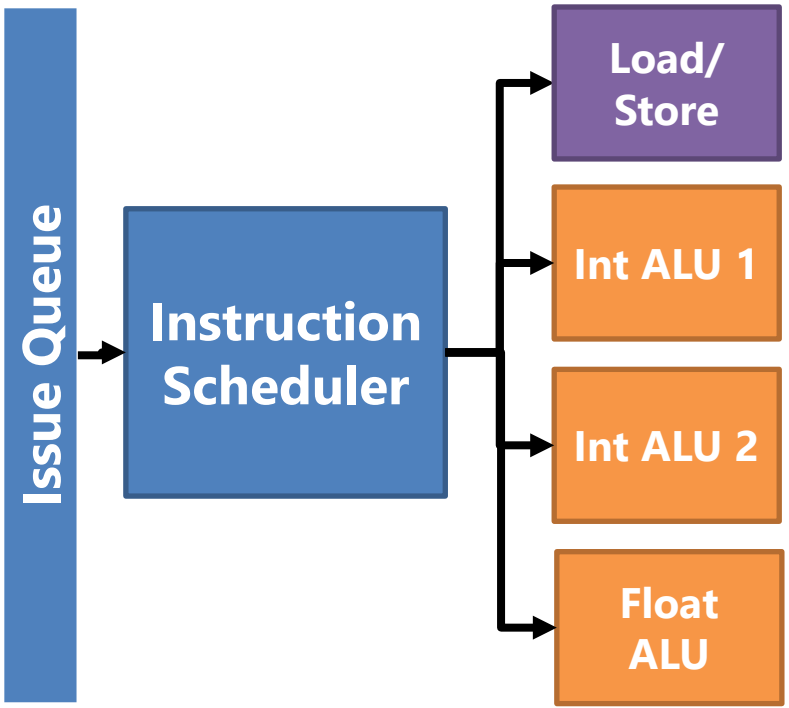

- **ID**: decode insts**, dispatch** to i-queue
  - This happens **in-order** of the program
- **EX**: **issue** ready insts to an EX unit
  - Insts become ready when values of operands are available
  - This can happen **out-of-order**
- Queue grows / shrinks dynamically
  - Grows when data hazards stall issue
  - Shrinks when control hazards flush instructions from queue

Scheduling the Issue Queue

- Now we have pool of instructions. When do they become ready?
  - Ready operands and instructions are in **green**
  - Not ready operands and instructions are in **red**

```
[Dispatched]
li t0, 1
li t1, 2
add t2, t0, t1
```

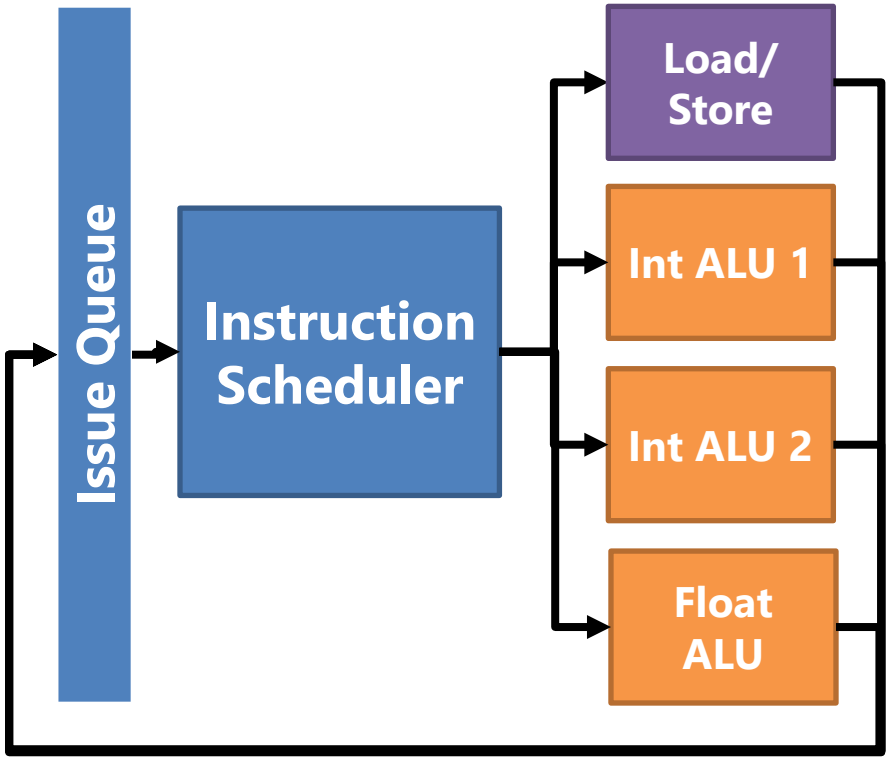

[Issued]

Scheduling the Issue Queue

- Initially both `li t0, 1` and `li t1, 2` are ready
  - The `li` instruction does not have any register operands
  - Instruction scheduler has a choice of what to issue

```
[Dispatched]
li t0, 1
li t1, 2
add t2, t0, t1
```

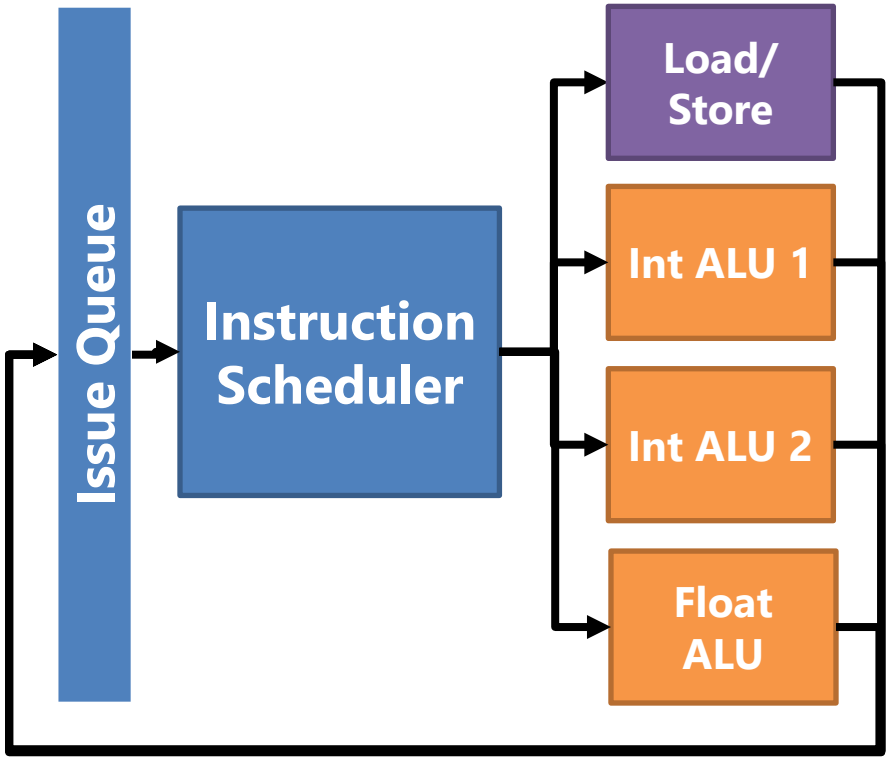

[Issued]

Scheduling the Issue Queue

- Let's say the scheduler issues `li t1, 2` first
- Then the `t1` operand becomes ready after it completes

```
[Dispatched]
li t0, 1
li t1, 2
add t2, t0, t1
```

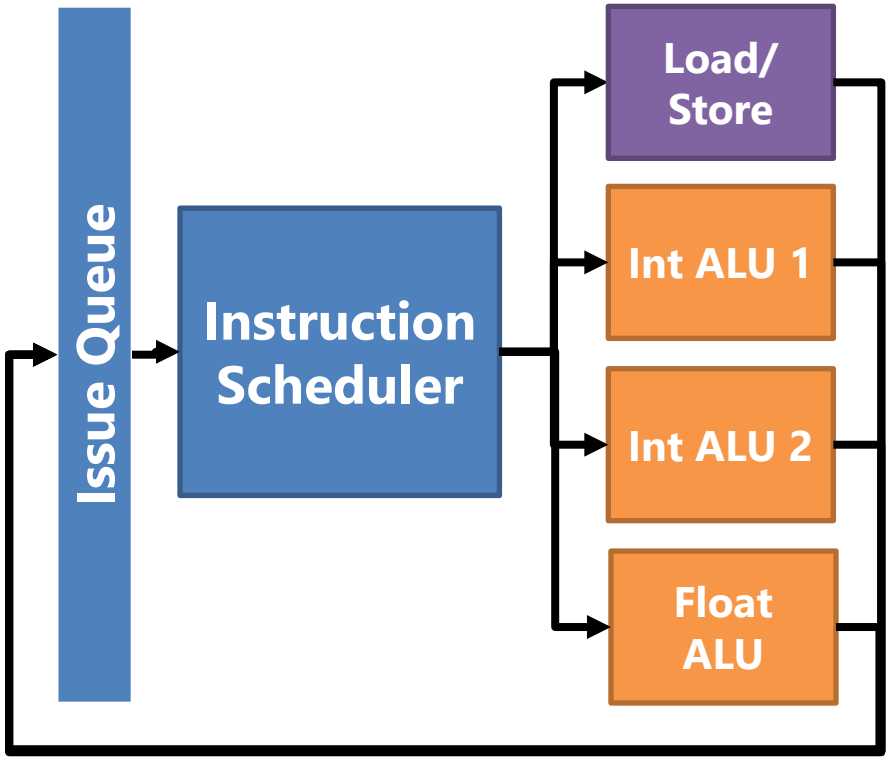


```
[Issued]
li t1, 2
```

Scheduling the Issue Queue

- Now the only ready instruction `li t0, 1` issues
- Then the `t0` operand becomes ready after it completes
- Now `add t2, t0, t1` is finally ready to issue

```
[Dispatched]
li t0, 1

add t2, t0, t1
```

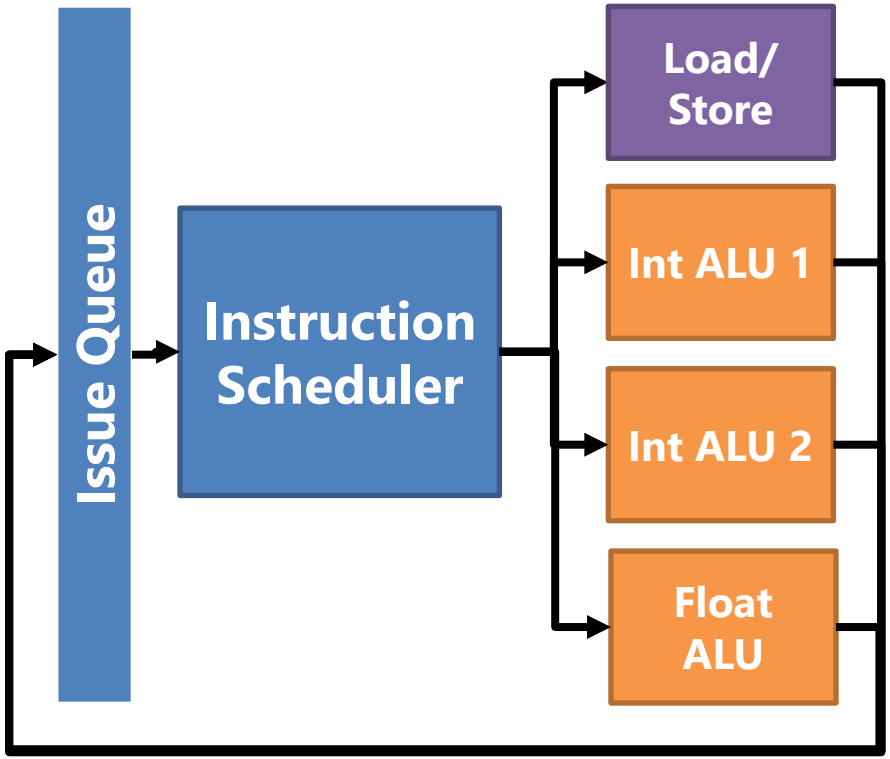


```
[Issued]
li t1, 2
li t0, 1
```

Scheduling the Issue Queue

- And we are done!

[Dispatched]

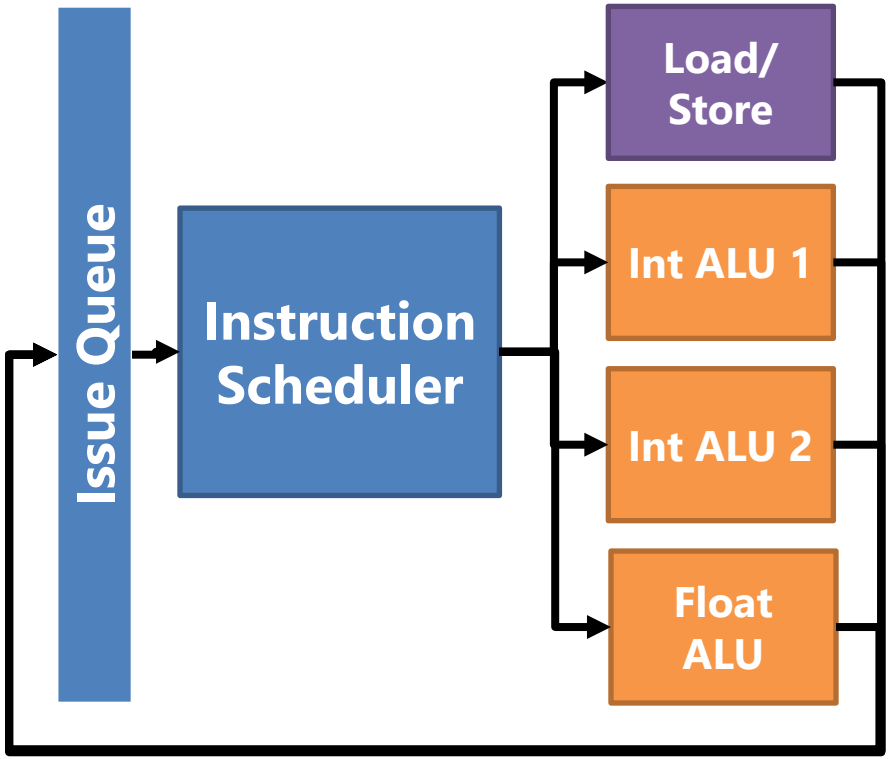

[Issued]

```
li t1, 2
li t0, 1
add t2, t0, t1
```

Scheduling the Issue Queue

- Note how we reordered `li t0, 1` and `li t1, 2`
  - There are no dependencies between the two, so no issues
  - Also, RAW dependency with `add t2, t0, t1` was enforced

```
[Dispatched]
li t0, 1
li t1, 2
add t2, t0, t1
```

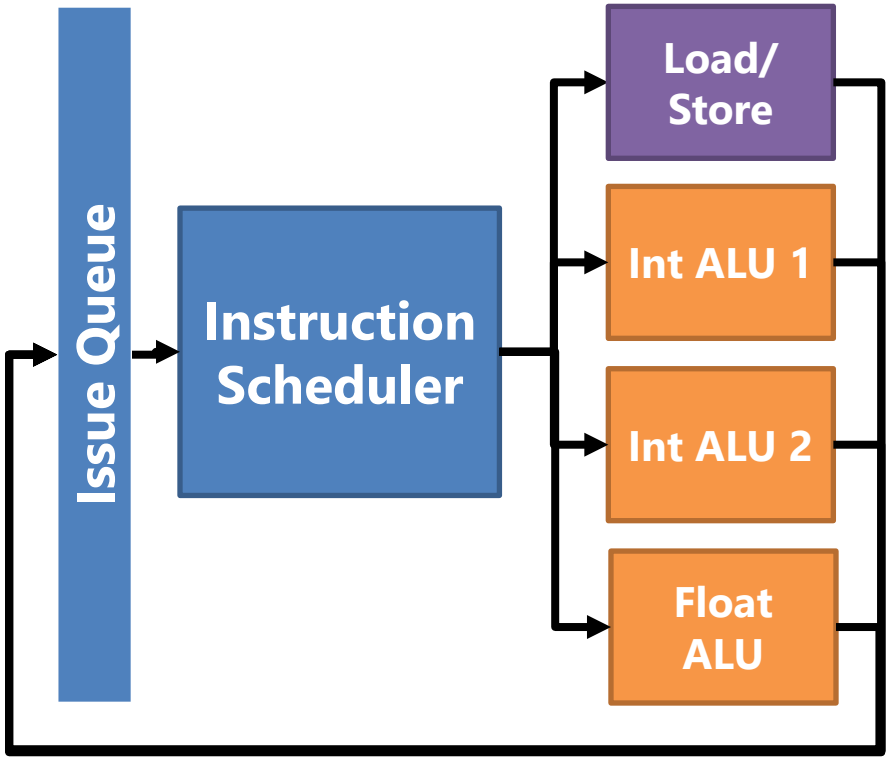


```
[Issued]
li t1, 2
li t0, 1
add t2, t0, t1
```

What if we had a WAW dependency?

- Reordering `li t0, 1` and `li t0, 2` still allowed (both are ready)
  - Now `t2 = 4` in original code, but `t2 = 2` during execution!
  - How do we disallow this from happening?

```
[Dispatched]
li t0, 1
li t0, 2
add t2, t0, t0
```

WAW!

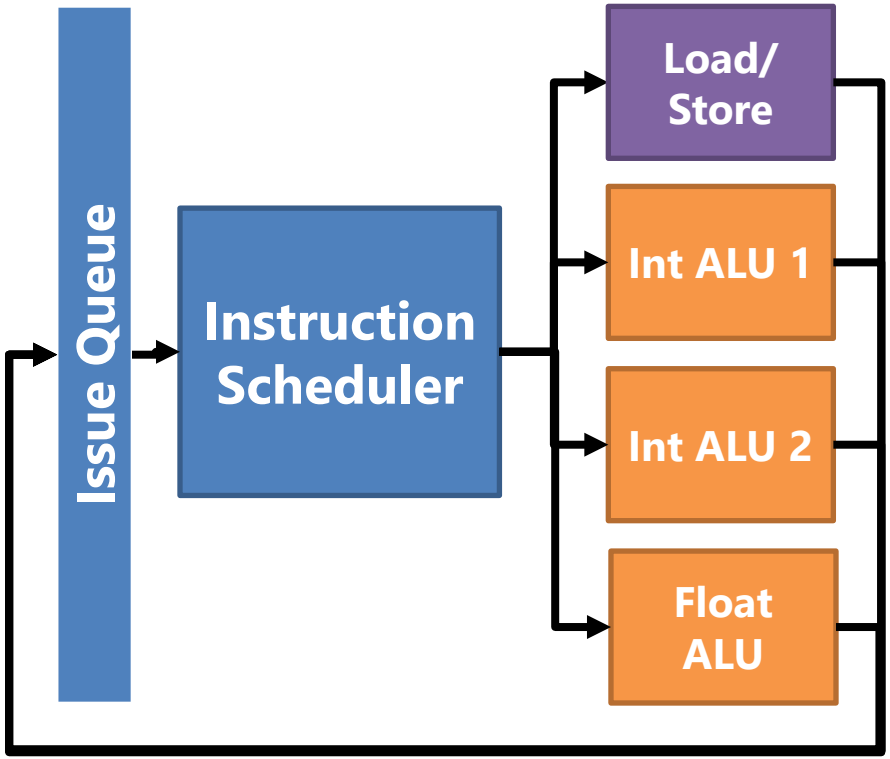


```
[Issued]
li t0, 2
li t0, 1
add t2, t0, t0
```

WAW and WAR dependencies are tricky

- RAW (true) dependencies are automatically enforced
  - Instructions cannot issue until all operands are ready (written)

- WAW and WAR dependencies are not enforced
  - There is no data passing between the two instructions
  - The two instructions can become ready in any order

- We could somehow enforce WAW and WAR dependencies
  - But there is a better solution: **register renaming**!
  - Remember? That's what the compiler did to remove WAW/WAR.

Register Renamer and the RAT

- As soon as decode, **Register Renamer** renames all registers
  - Done with the help of the **Register Alias Table (RAT)**
  - **RAT** is current mapping between **architectural** and **physical** registers
    - Architectural registers: Registers in ISA used in programs (t0, t1, t2, …)
    - Physical registers: Renamed registers used in processor (p0, p1, p2, …)

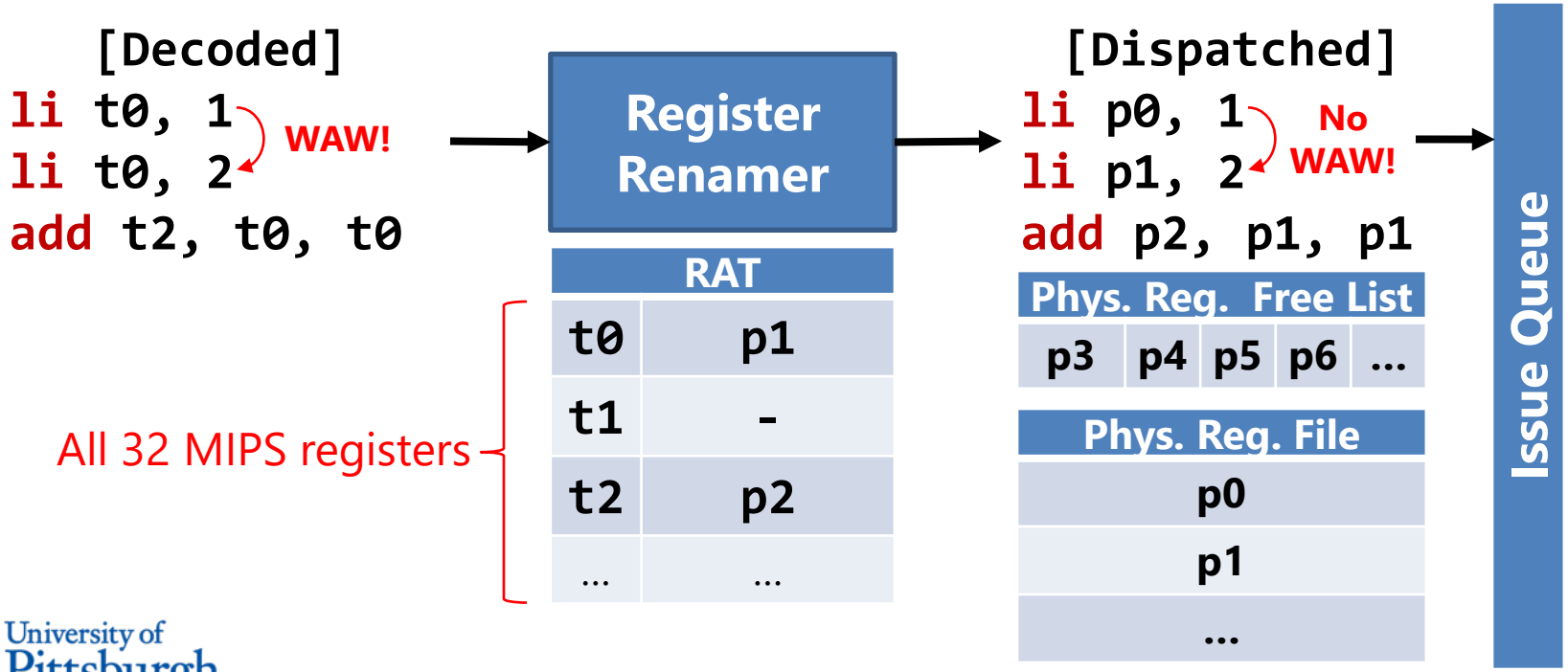

Register Renamer and the RAT

- So how does the RAT work?
- Initially, no assignments have been done, so mapping is empty.

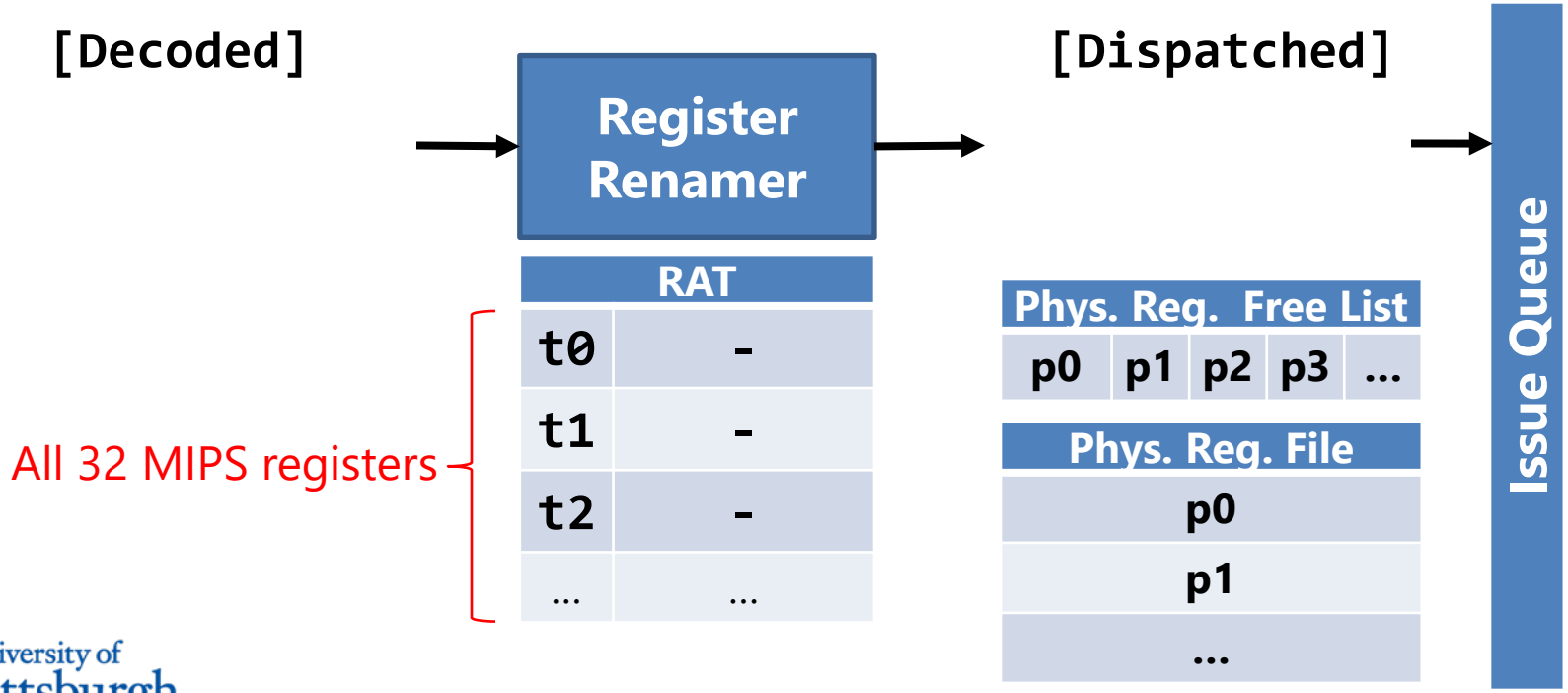

Register Renamer and the RAT

1. `li t0, 1` is decoded, destination `t0` is renamed to `p0`

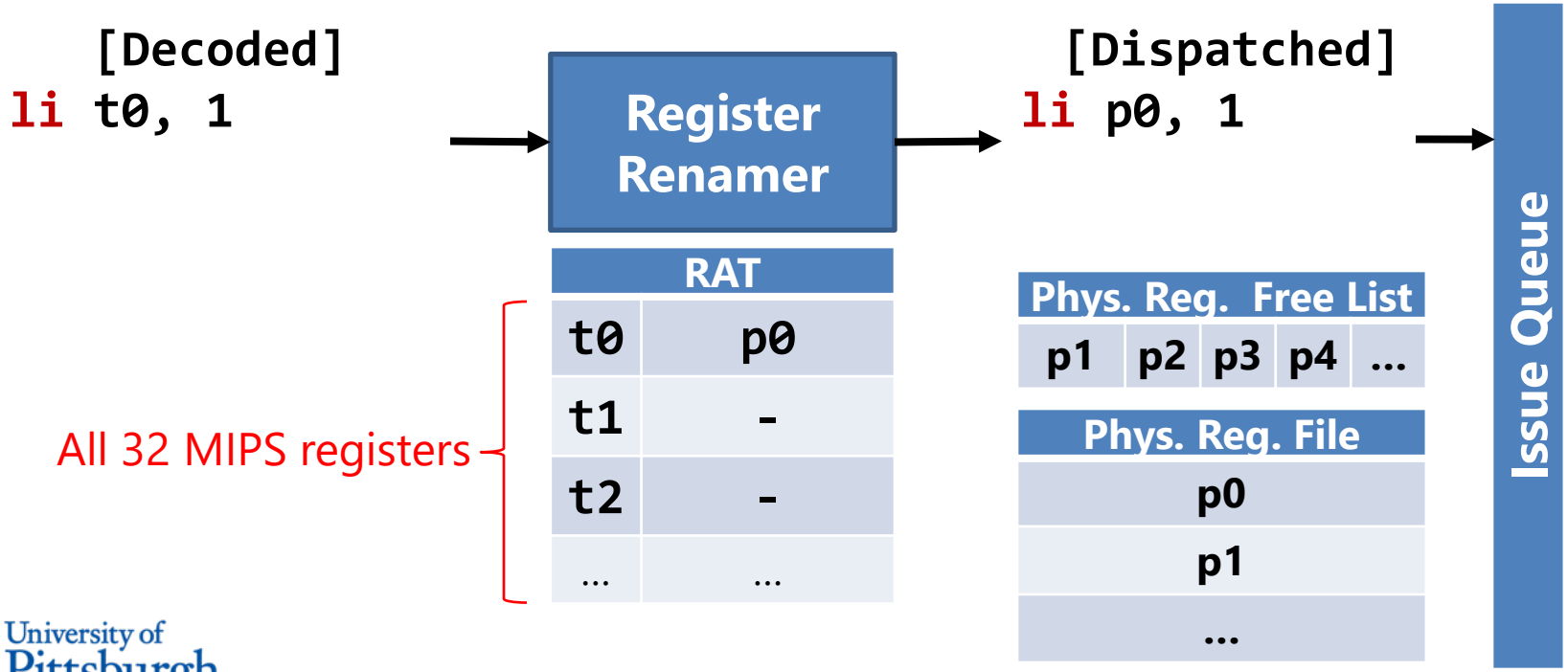

Register Renamer and the RAT

1. `li t0, 1` is decoded, destination **t0** is renamed to **p0**
2. `li t0, 2` is decoded, destination **t0** is renamed to **p1**
   - Remember the single assignment rule?
   - A new value always gets a new register

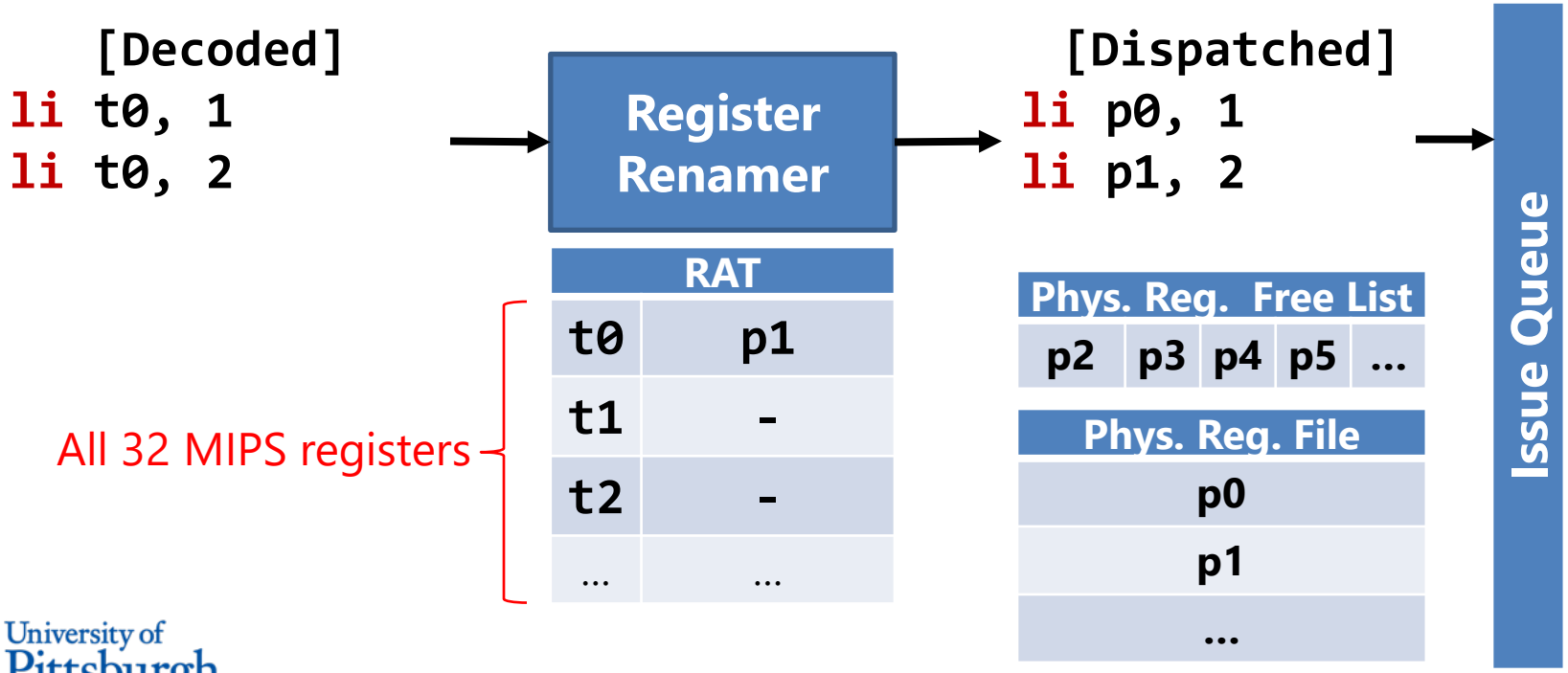

Register Renamer and the RAT

1. `li t0, 1` is decoded, destination **t0** is renamed to **p0**
2. `li t0, 2` is decoded, destination **t0** is renamed to **p1**
3. `add t2, t0, t0` is decoded:
   - Two **t0** input registers use current mapping **p1**
   - Destination register **t2** is renamed to **p2**

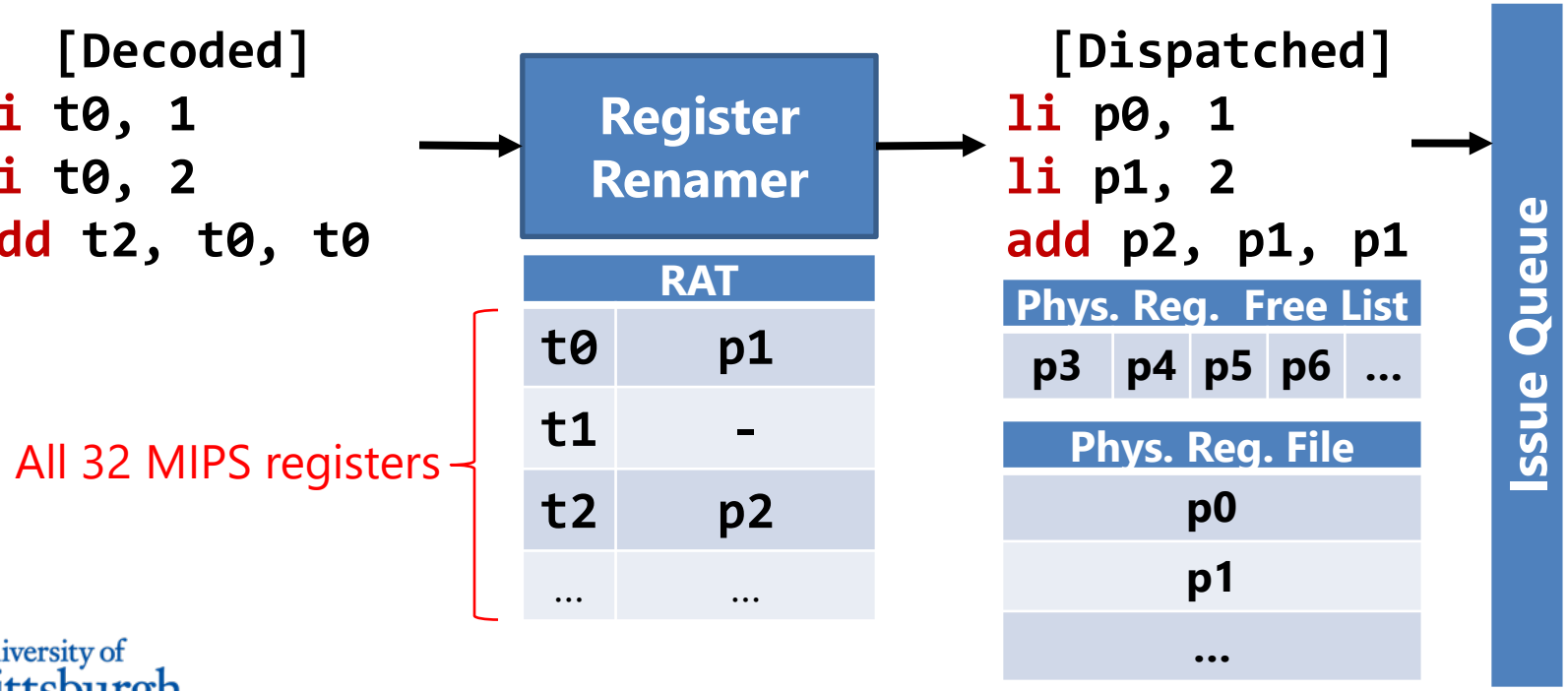

Register Rename Removes all WAW/WAR Deps

- By the time instructions are dispatched to i-queue
  - All architectural registers have been renamed to physical registers
  - All WAW and WAR dependencies have been removed

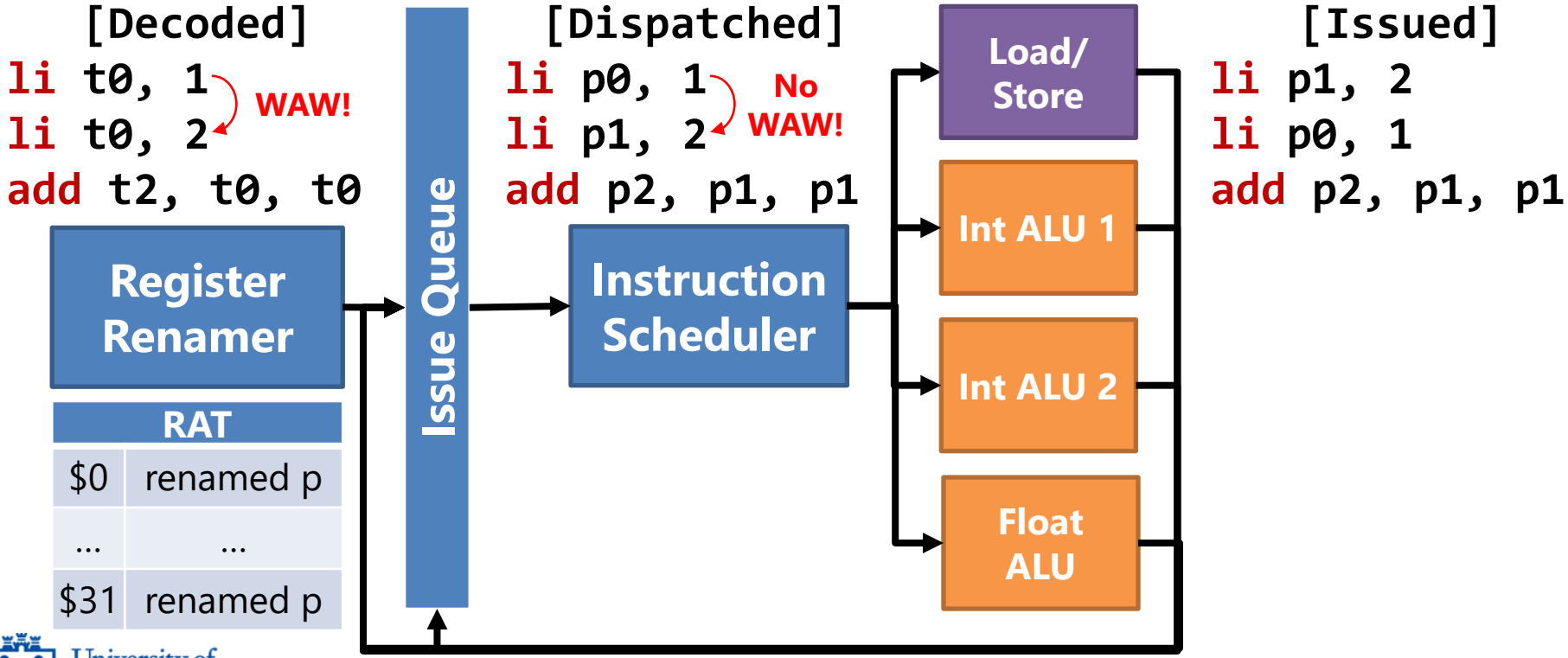

All Computation Done using Physical Registers

- Now ID stage (dispatch) reads registers from physical register file
- All data forwarding also done based on physical registers

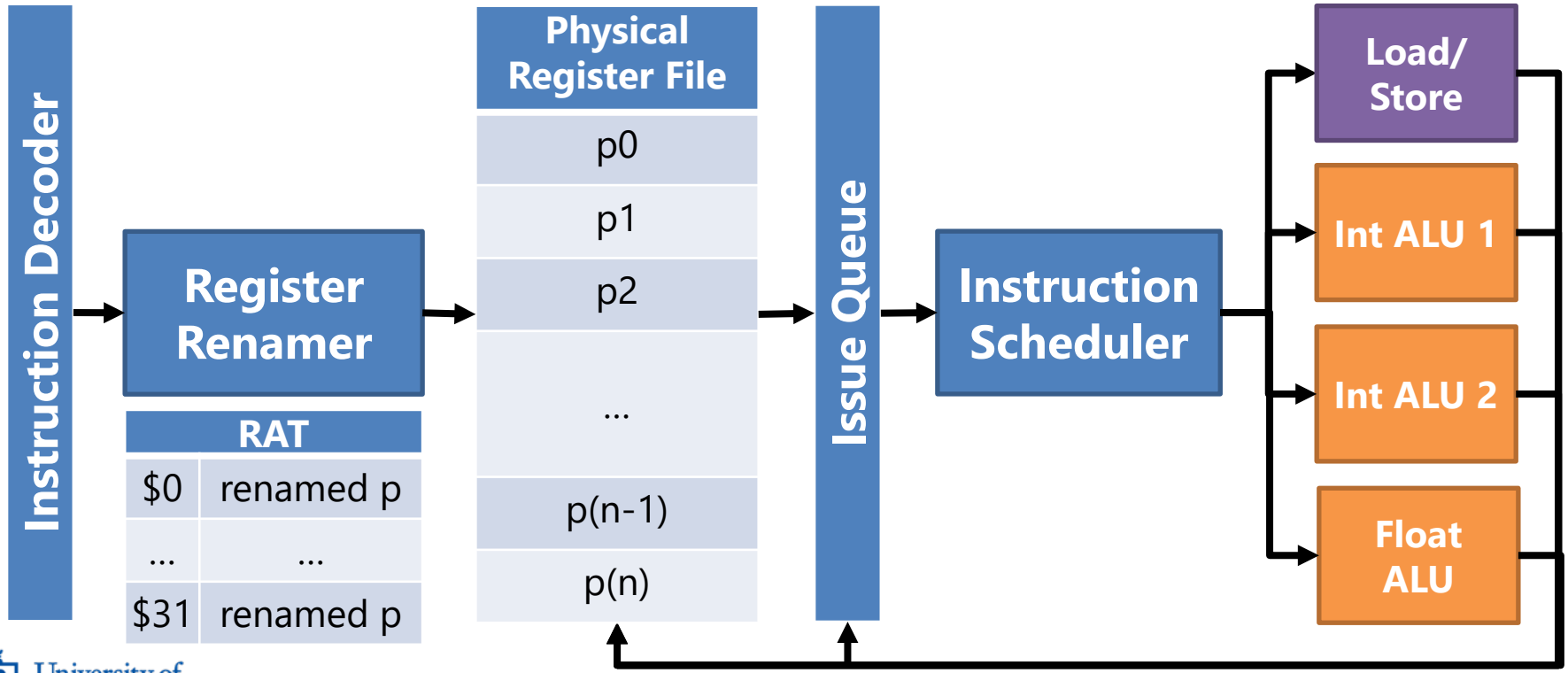

Load / Store Queue

How about data dependencies through memory?

- RAW, WAR, and WAW dependencies happen through memory as well
  - Clearly, the below code has no data dependencies through registers

```
sw   $t0, 4($s0)    // stores to 0xdeadbeef
lw   $t1, 8($s1)    // loads from 0xdeadbeef
```

  - But there is a RAW dependency through the location 0xdeadbeef

- Question: how does processor enforce RAW dependencies?
- Question: how does processor deal with WAR and WAW dependencies?

- Answer: through **memory renaming** using a **load / store queue**
  - Just like registers, a **new queue entry** created for every **store** instruction
    → All **WAR** and **WAW** memory dependencies are **removed**
  - Loads fetch data from most recent queue entry with same address
    → All **RAW** memory dependencies are **enforced**

Every store gets a new store queue entry

- Memory instructions inserted into load/store queue as well as issue queue
  - Age denotes age of memory operation (incremented at every mem op)
  - Address and value of mem op is unknown until mem op is complete

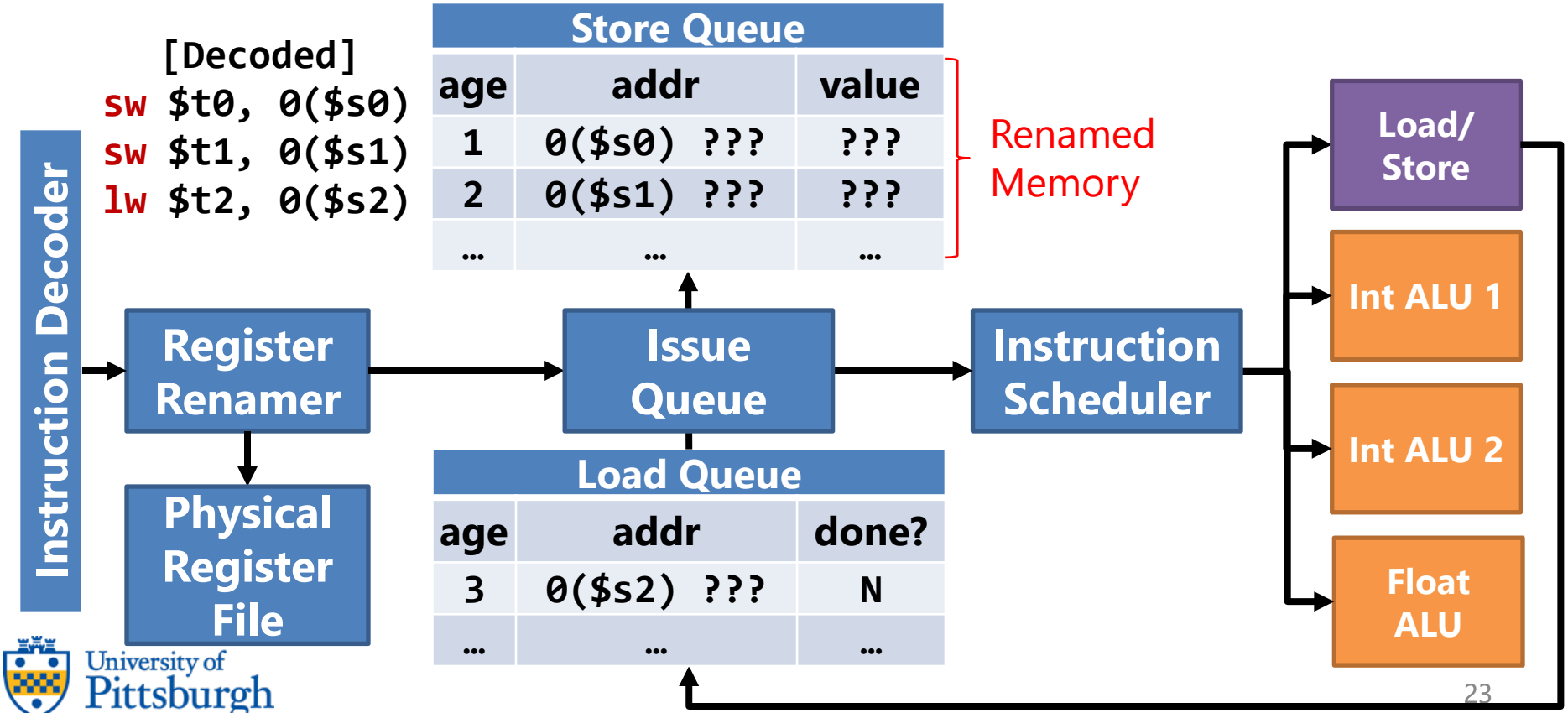

Scenario 1: WAW reordering of two stores

- Let's say **`sw $t1, 0($s1)`** becomes ready first in the i-queue and executes
  - **`0($s1)`** contains value **`0xdeadbeef`** and **`$t1`** contains value **`1`**

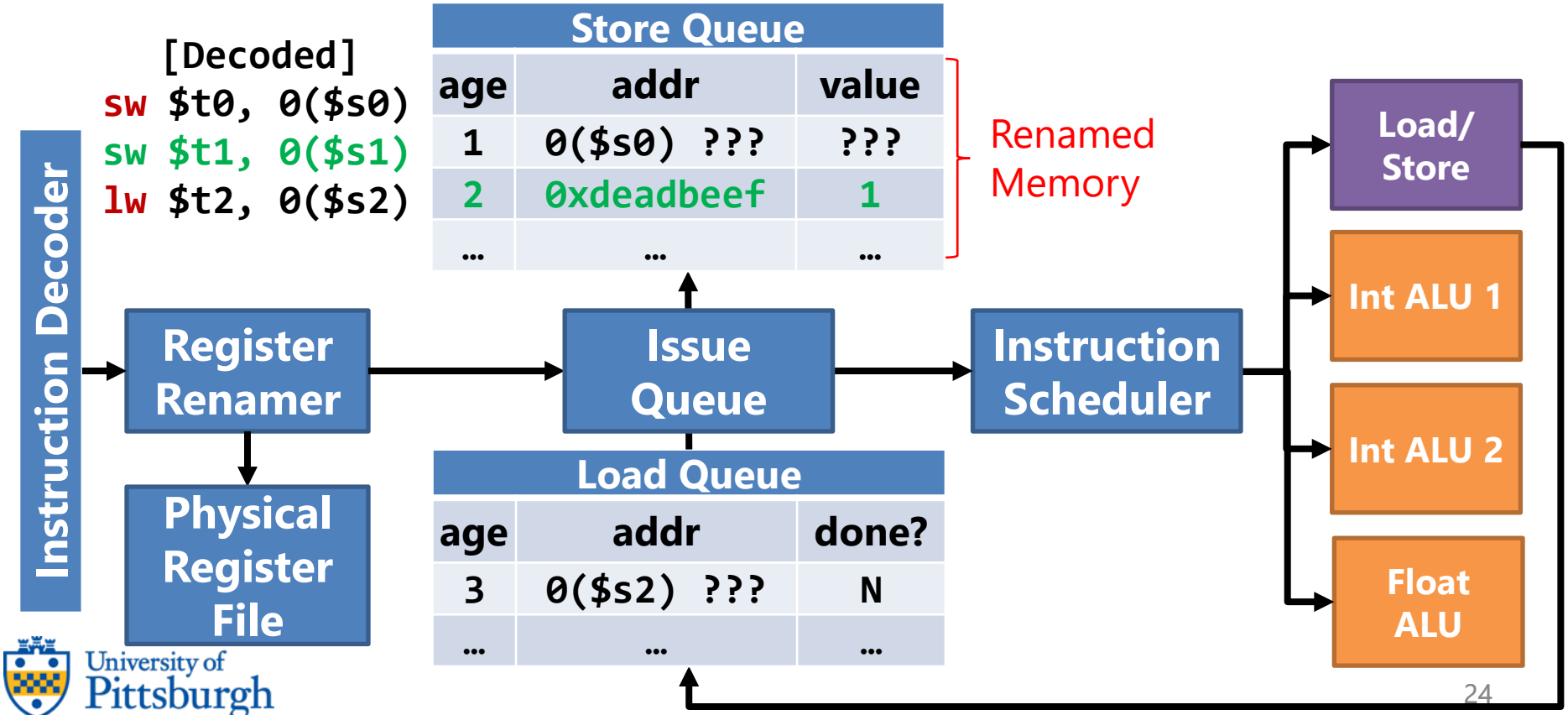

Store Queue

age	addr	value
1	0($s0) ???	???
2	0xdeadbeef	1
…	…	…

Load Queue

age	addr	done?
3	0($s2) ???	N
…	…	…

Scenario 1: WAW reordering of two stores

- Next, `sw $t0, 0($s0)` becomes ready in the i-queue and executes
  - `0($s1)` is also contains `0xdeadbeef` and `$t0` contains `0`
  - So, we have effectively reordered execution of a WAW dependency

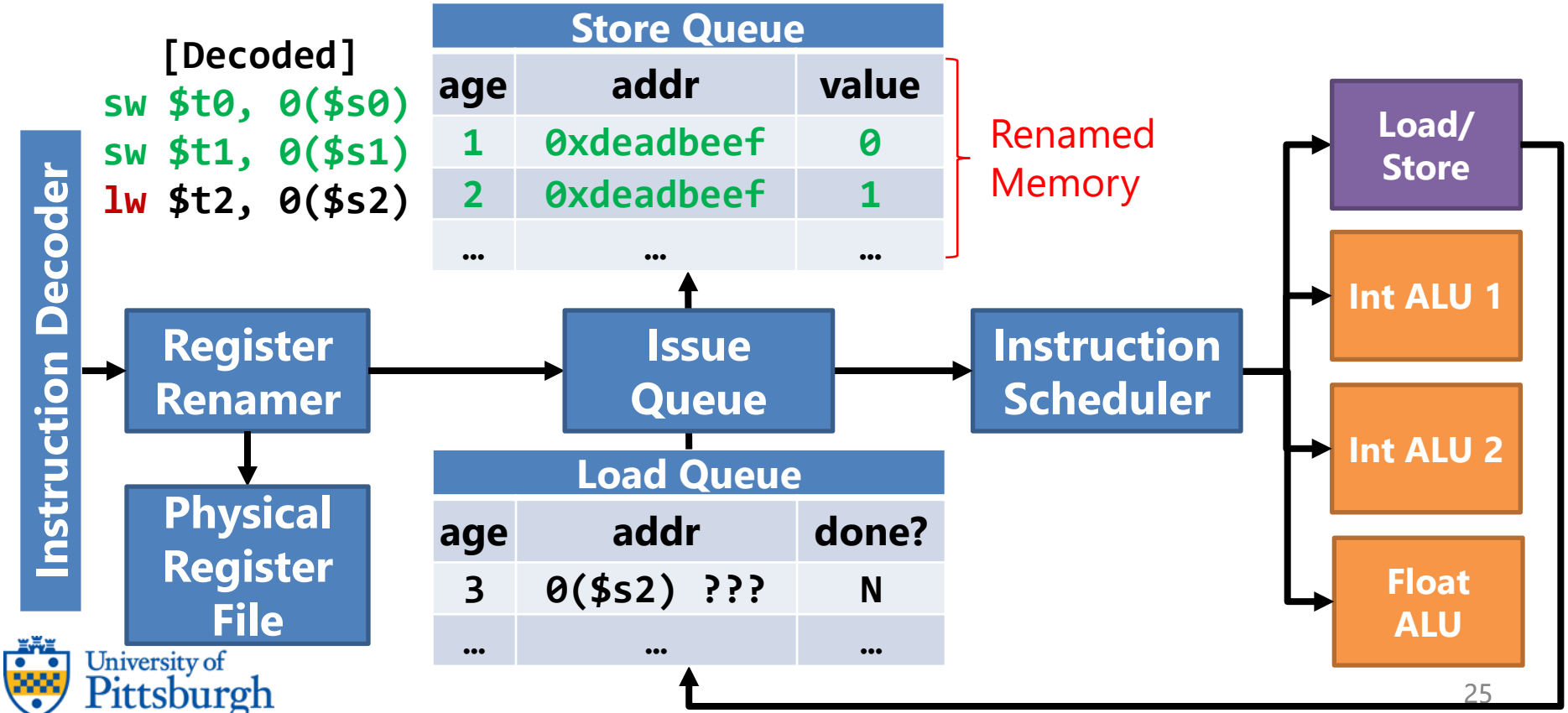

Scenario 1: WAW reordering of two stores

- Finally, `lw $t2, 0($s2)` becomes ready in the i-queue and executes
  - `0($s2)` also resolves to `0xdeadbeef` meaning a RAW dependence
  - Load Unit searches Store Queue for most recent store matching address

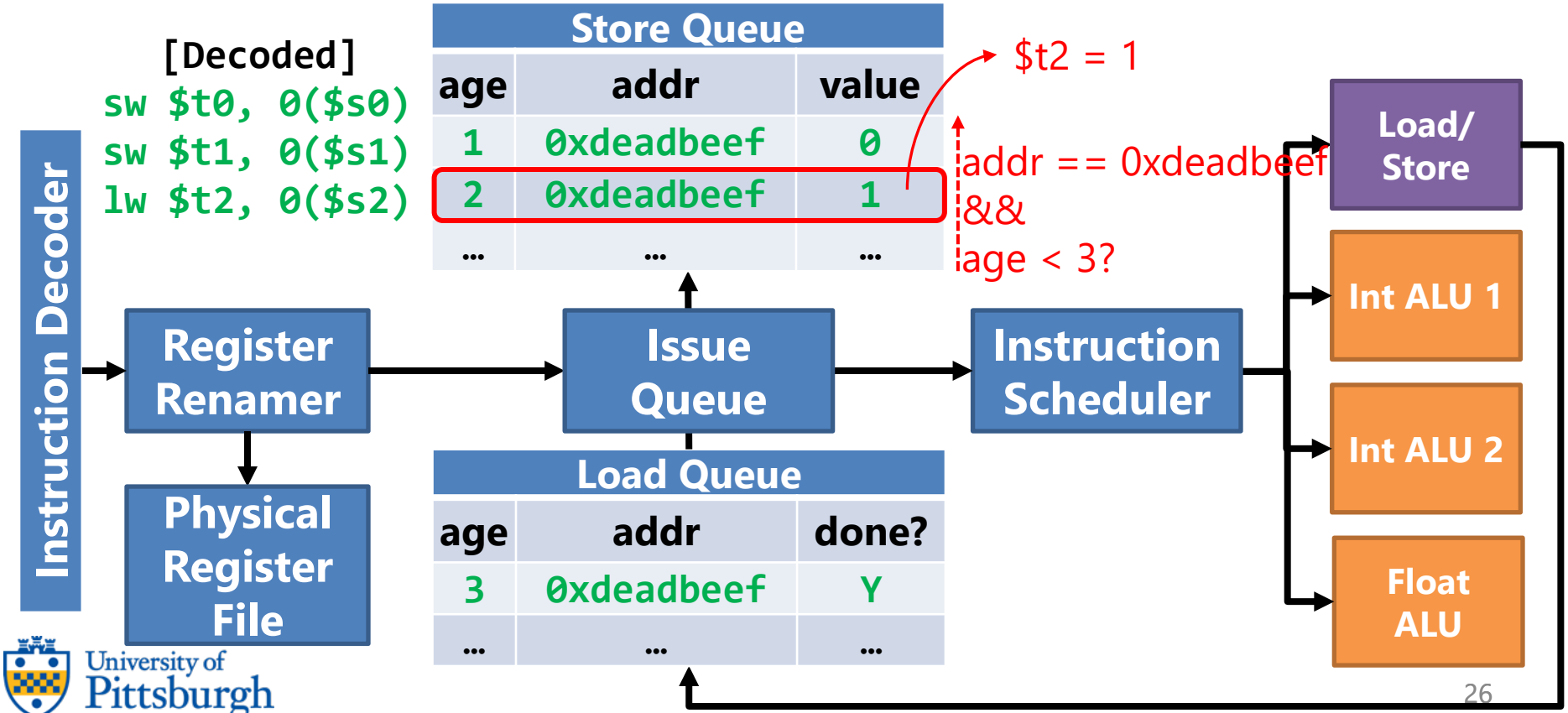

Scenario 2: Flush due to RAW violation

- In this scenario, `lw $t2, 0($s2)` becomes ready first and executes

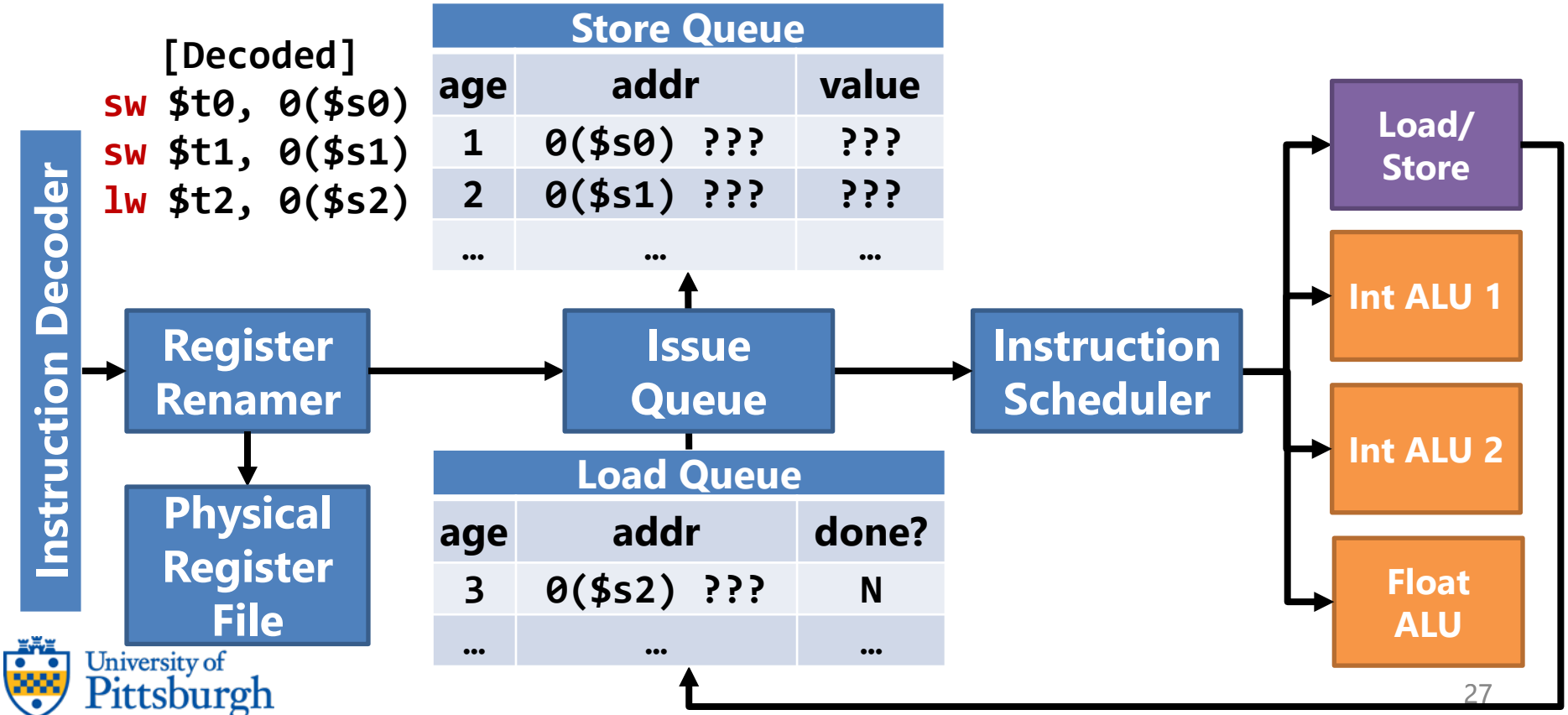

Scenario 2: Flush due to RAW violation

- In this scenario, `lw $t2, 0($s2)` becomes ready first and executes
  - Load Unit searches store queue but does not find matching entry

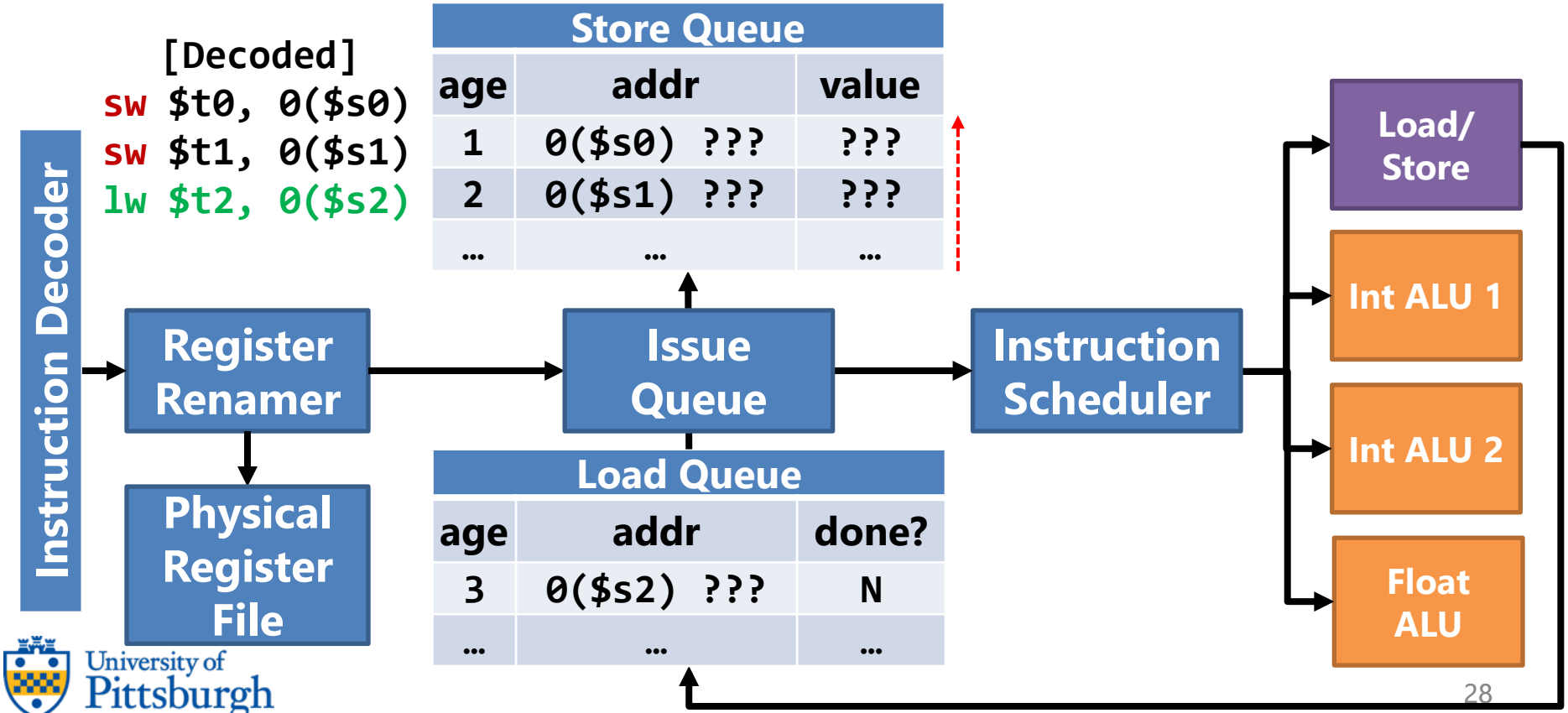

Scenario 2: Flush due to RAW violation

- In this scenario, `lw $t2, 0($s2)` becomes ready first and executes
  - Load Unit searches store queue but does not find matching entry
  - So, it simply fetches value for **`$t2`** from memory

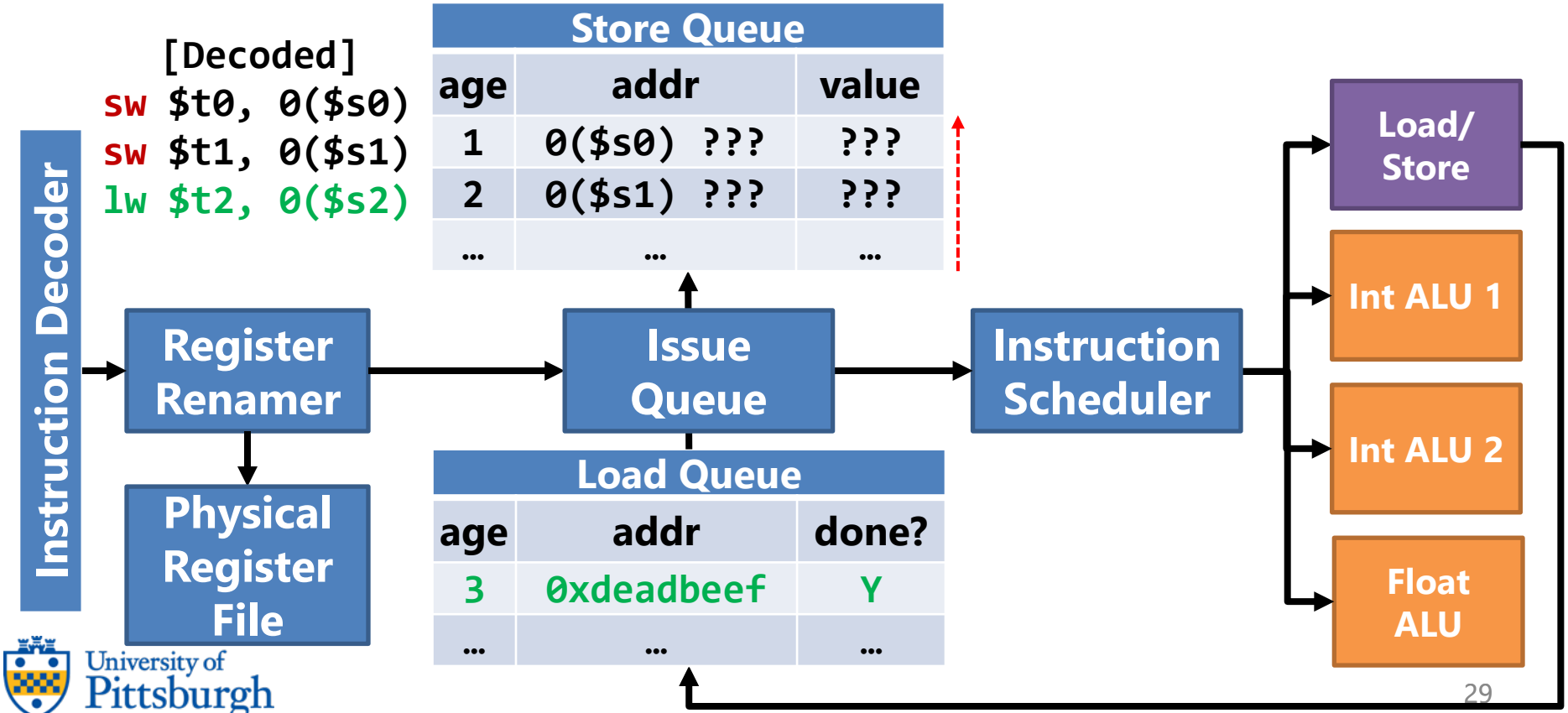

Scenario 2: Flush due to RAW violation

- Next, `sw $t0, 0($s0)` becomes ready in the i-queue and executes
  - Store Unit searches Load Queue to see if there were RAW violations
  - And, yes, there is a Load that performed earlier than it should have!

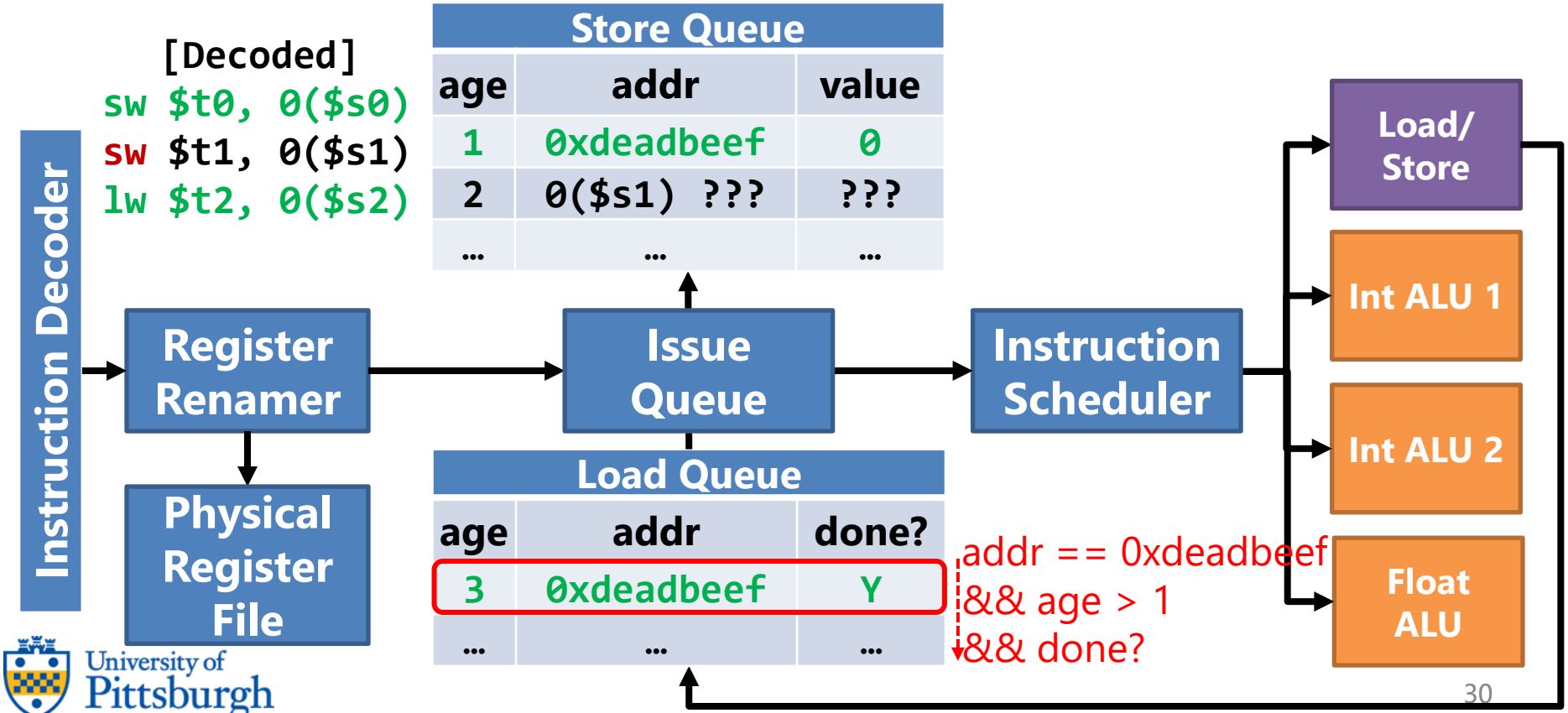

Scenario 2: Flush due to RAW violation

- Flush `lw $t2, 0($s2)` and all instructions that follow it in i-queue
  - All following execution has been polluted by incorrect value of `$t2`

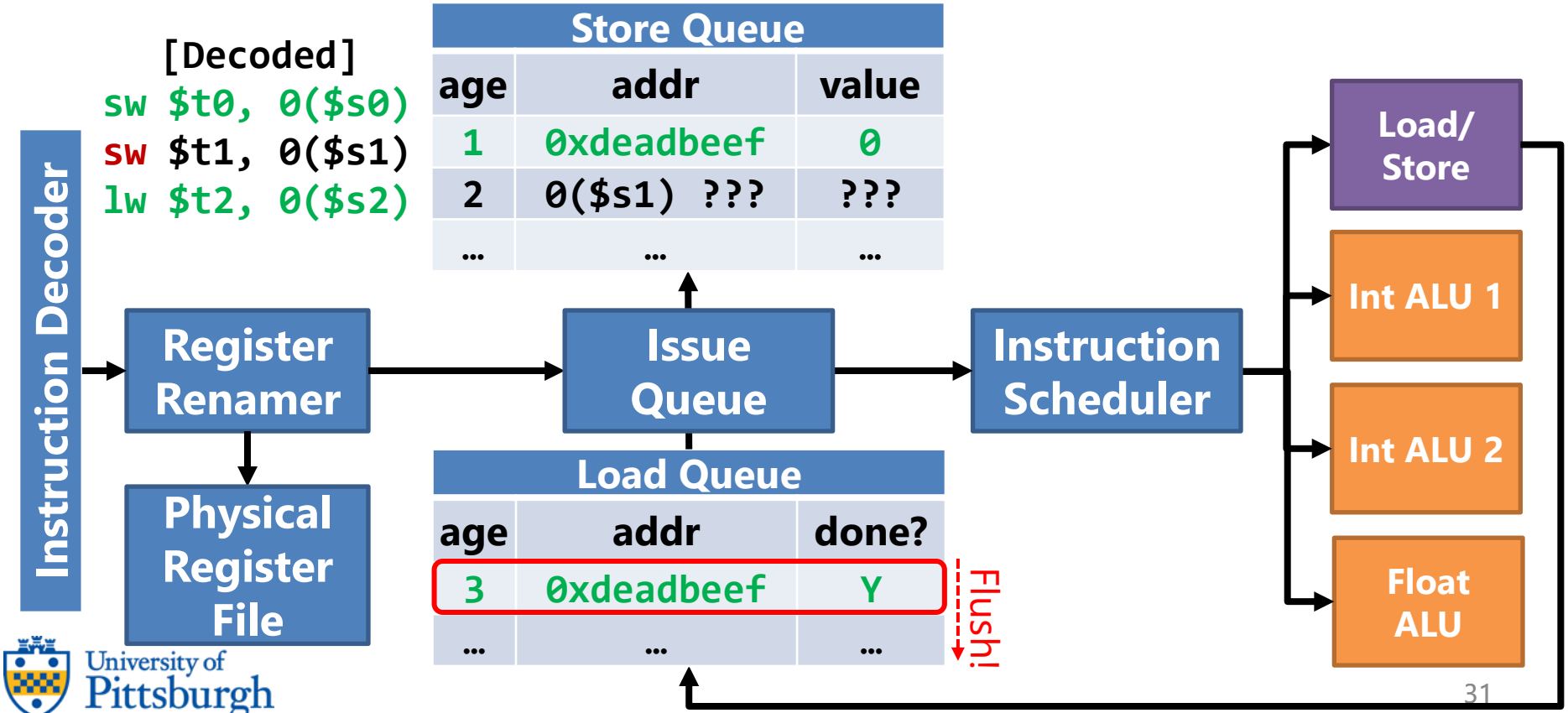

Tomasulo's Algorithm

Tomasulo's Algorithm

- OoO with register renaming was invented by Robert Tomasulo
  - Used in IBM 360/91 Floating Point Units
  - Tomasulo, "An Efficient Algorithm for Exploiting Multiple Arithmetic Units," IBM Journal of R&D, January 1967.

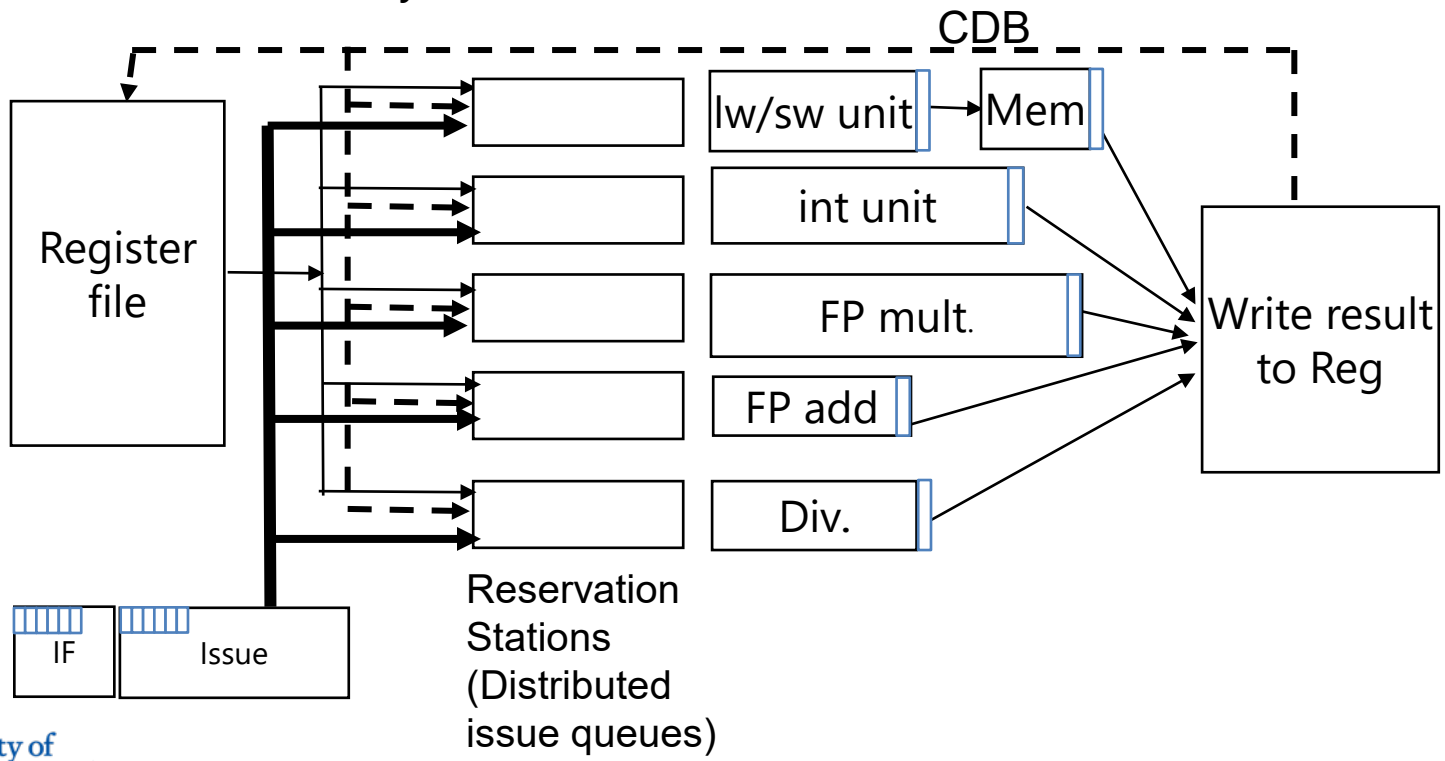

Tomasulo's Machine: IBM 360/91

- Note distributed **reservation stations** fills role of issue queue
- Note the lack of a **physical register file** and a **RAT**
  - Reservation stations fill the role of renamed registers

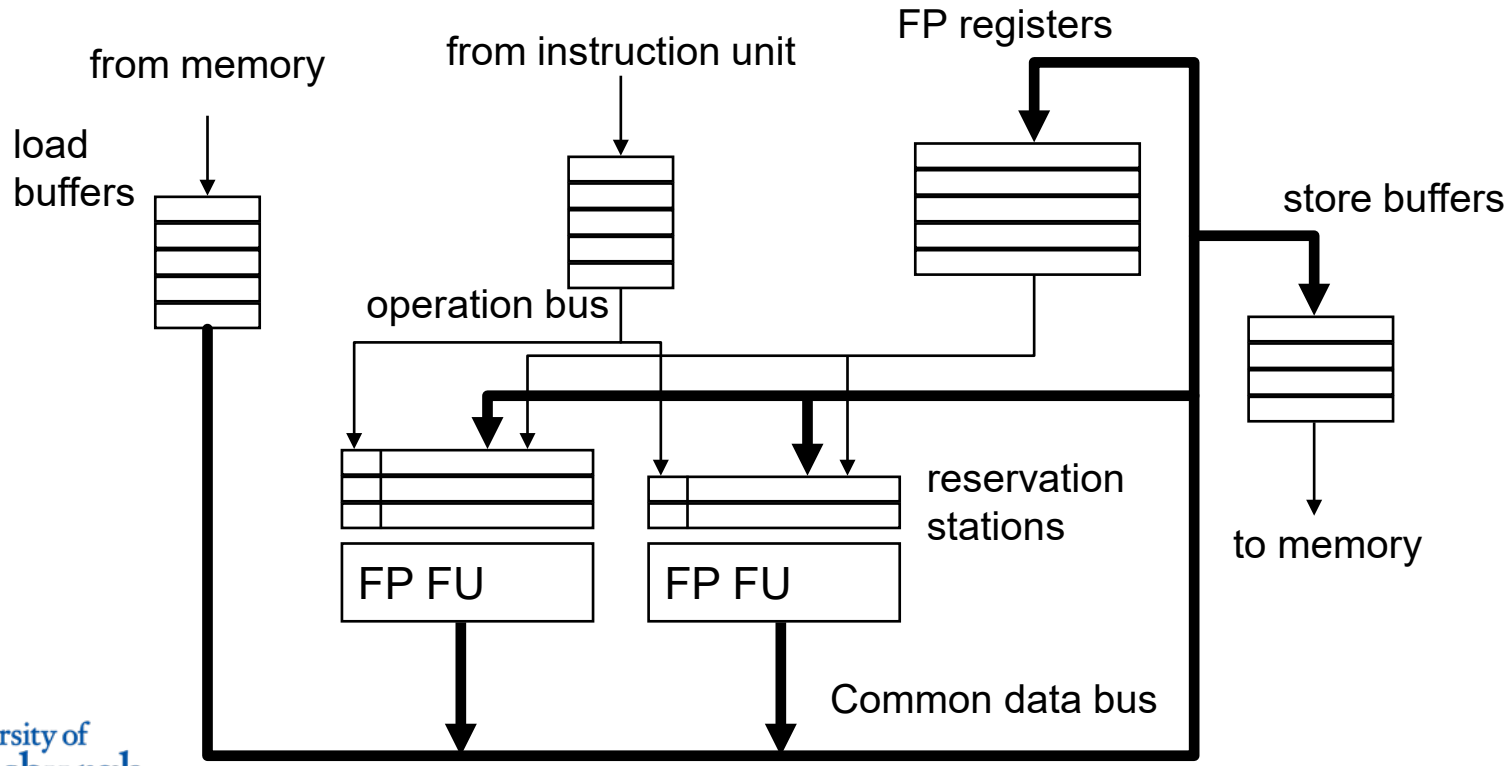

Bookkeeping in Tomasulo's algorithm

- Each time FU produces a value, it broadcasts on the CDB :
  - Value + *Reservation Station ID* producing value

- Reservation Stations Entry (filled on dispatch):
  - **Busy / Not Busy** (whether station is occupied)
  - **Op Code** (if FU can perform more than one operation)
  - Source operand values - $\boldsymbol{V_j}$ and $\boldsymbol{V_k}$
    - Filled on dispatch if value is available by reading from register file
  - *Reservation Station IDs* producing source operands - $\boldsymbol{Q_j}$ and $\boldsymbol{Q_i}$
    - Filled on dispatch if operand is pending due to RAW dependency
  - Address field - ***A*** (if FU is a load or store unit)

- Register Status Table:
  - *Reservation station* that will write into each register (if any)

Three Pipeline Stages of an Instruction

- **Decode / Dispatch**
  - Allocate reservation station and query Register Status Table for status of operand registers
    - Read ready operands and store to V_j and V_k
    - For not ready operands, rename to Reservation Station IDs Q_j and Q_i producing them
- **Issue / Execute**
  - Monitor the CDB for Reservation Station ID tags for not ready operands.
  - When both operands are ready, issue instruction.
  - Only one station can start execution if there are multiple ready stations.
- **Write Back / Retire**
  - Broadcast **Value + Reservation Station ID Tag** to CDB
    - Reservation Stations: Find operands Q_j that match Tag and fill in V_j with Value
    - Reservation Stations : Mark reservation station that matches Tag as not busy (free)
    - Register Status Table: If register is waiting for Tag, update register file and mark as ready
  - Need multiple CDBs to write back multiple values and tags for a wider processor
- Reservation Stations need tag matching, or Content-Addressable Memory (CAM)
  - Expensive parallel comparisons with tag and each reservation station → on critical path
  - ☞ Cost limits number of reservation stations (and thus instruction window size)

Example Architecture

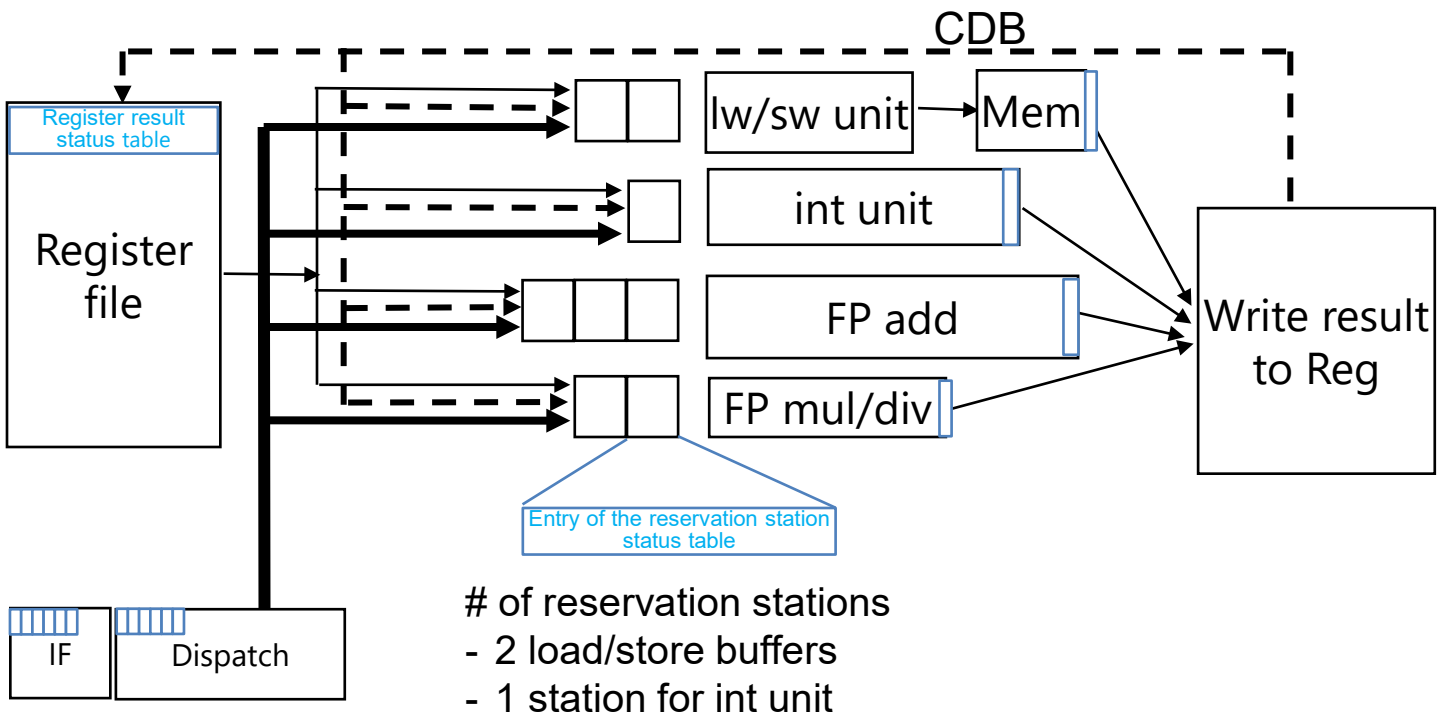

# of reservation stations
- 2 load/store buffers
- 1 station for int unit
- 3 station for FP add unit
- 2 station for FP mul/div unit

Example Execution

Instruction		Dispatch	Issue	Write result
fld	F6, 34(R2)	X	X	
fld	F2, 45(R3)	X	X	
fmul.d	F0, F2, F4	X		
fsub.d	F8, F2, F6	X		
fdiv.d	F10, F0, F12	X		
fadd.d	F6, F8, F2	X		

Name	Busy	Op	Vj	Vk	Qj	Qk	A
Load1	Y	Load					34+Reg[R2]
Load2	Y	Load					45+Reg[R3]
Add1	Y	Sub			Load2	Load1	
Add2	Y	Add			Add1	Load2	
Add3	no						
Mult1	Y	Mul		Reg[F4]	Load2		
Mult2	Y	Div		Reg[F12]	Mult1		
Int	no						

Register Status Table	F0	F2	F4	F6	F8	F10	F12	…	F30
	Mult1	load2		Add2	Add1	Mult2			

Example Execution

Instruction	Dispatch	Issue	Write result	
fld F6, 34(R2)	X	X	X	done
fld F2, 45(R3)	X	X		
fmul.d F0, F2, F4	X			
fsub.d F8, F2, F6	X			
fdiv.d F10, F0, F12	X			
fadd.d F6, F8, F2	X			

Name	Busy	Op	Vj	Vk	Qj	Qk	A
Load1	no						
Load2	Y	Load					45+Reg[R3]
Add1	Y	Sub		Reg[F6]	Load2		
Add2	Y	Add			Add1	Load2	
Add3	no						
Mult1	Y	Mul		Reg[F4]	Load2		
Mult2	Y	Div		Reg[F12]	Mult1		
Int	no						

Register Status Table	F0	F2	F4	F6	F8	F10	F12	…	F30
	Mult1	load2		Add2	Add1	Mult2			

Example Execution

Instruction	Dispatch	Issue	Write result	
fld F6, 34(R2)	X	X	X	done
fld F2, 45(R3)	X	X	X	done
fmul.d F0, F2, F4	X			
fsub.d F8, F2, F6	X			
fdiv.d F10,F0,F12	X			
fadd.d F6, F8, F2	X			

Name	Busy	Op	Vj	Vk	Qj	Qk	A
Load1	no						
Load2	no						
Add1	Y	Sub	Reg[F2]	Reg[F6]			
Add2	Y	Add		Reg[F2]	Add1		
Add3	no						
Mult1	Y	Mul	Reg[F2]	Reg[F4]			
Mult2	Y	Div		Reg[F12]	Mult1		
Int	no						

Register Status Table	F0	F2	F4	F6	F8	F10	F12	…	F30
	Mult1			Add2	Add1	Mult2			

Example Execution

Instruction	Dispatch	Issue	Write result	
fld F6, 34(R2)	X	X	X	done
fld F2, 45(R3)	X	X	X	done
fmul.d F0, F2, F4	X	X		
fsub.d F8, F2, F6	X	X	X	done
fdiv.d F10,F0,F12	X			
fadd.d F6, F8, F2	X			

Name	Busy	Op	Vj	Vk	Qj	Qk	A
Load1	no						
Load2	no						
Add1	no						
Add2	Y	Add	Reg[F8]	Reg[F2]			
Add3	no						
Mult1	Y	Mul	Reg[F2]	Reg[F4]			
Mult2	Y	Div		Reg[F12]	Mult1		
Int	no						

Register Status Table	F0	F2	F4	F6	F8	F10	F12	…	F30
	Mult1			Add2		Mult2			

Example Execution

Instruction	Dispatch	Issue	Write result	
fld F6, 34(R2)	X	X	X	done
fld F2, 45(R3)	X	X	X	done
fmul.d F0, F2, F4	X	X		
fsub.d F8, F2, F6	X	X	X	done
fdiv.d F10,F0,F12	X			
fadd.d F6, F8, F2	X	X	X	done

Name	Busy	Op	Vj	Vk	Qj	Qk	A
Load1	no						
Load2	no						
Add1	no						
Add2	no						
Add3	no						
Mult1	Y	Mul	Reg[F2]	Reg[F4]			
Mult2	Y	Div		Reg[F12]	Mult1		
Int	no						

Register Status Table	F0	F2	F4	F6	F8	F10	F12	…	F30
	Mult1					Mult2			

Tomasulo's reservation stations duplicates values

- Multiple copies of same register value makes structure bloated
  - Complicates design of reservation stations on the critical path
  - It also means CDB must broadcast 64-bit register values (complicates wiring and increases power usage with wider CDB)

Name	Busy	Op	Vj	Vk	Qj	Qk	A
Load1	no						
Load2	no						
Add1	Y	Sub	Reg[F2]	Reg[F6]			
Add2	Y	Add		Reg[F2]	Add1		
Add3	no						
Mult1	Y	Mul	Reg[F2]	Reg[F4]			
Mult2	Y	Div		Reg[F12]	Mult1		
Int	no						

Register Status Table	F0	F2	F4	F6	F8	F10	F12	…	F30
	Mult1			Add2	Add1	Mult2			

Physical register file solves the duplication problem

- Physical register tags are duplicated, but they are shorter (~8 bits)
  - Reservation stations kept slim and efficient
  - CDB now only needs to broadcast tags and not values

Name	Busy	Op	Pi tag	Pj tag	Pk tag	Pj ready	Pk ready
Load1	no						
Load2	no						
Add1	Y	Sub	p4	p2	p1	yes	yes
Add2	Y	Add	p6	p4	p2	no	yes
Add3	no						
Mult1	Y	Mul	p3	p4	p0	no	yes
Mult2	Y	Div	p5	p3	p10	no	yes
Int	no						

Register Alias Table	F0	F2	F4	F6	F8	F10	F12	…	F30
	p3			p1	p4	p5			

Issue Queue vs. Reservation Stations

- Cost of parallel wake-up limits number of reservation stations
  - Along with cost of priority encoder to choose among ready insts
  - If too big, may need multiple cycles for wakeup (causing bubbles)

- Leads to two distinct design points in modern CPUs
  - Unified reservation stations (a.k.a. issue queue)
    - + Less structural hazards on dispatch due to imbalanced RS tables
    - – Longer wake-up due to larger structure
  - Distributed reservation stations for each functional unit
    - + Faster wake-up since each distributed RS table is small
    - – More structural hazards on due to imbalanced use of RS tables

Another thing that Tomasulo did not consider

- With out-of-order execution everything is happening concurrently
  - Physical registers hold multiple versions of architectural registers
  - What if we needed to recover a state at a specific point in code?

1. Recovery from pipeline flushes due to branch misprediction
   - How do you recover a **precise state** at the point of branch?
2. Recovery from pipeline flushes due to exceptions and interrupts
   - How do you recover a **precise state** at the point of exception?

- Two hardware structures come in handy
  - RAT: RAT snapshot provides precise mapping at point of decode
  - **ROB** (**R**e-**O**rder **B**uffer): Queue of instructions in program order
    - Allows instructions that follow the point of flush to be removed

Precise Exceptions

Exceptions Review

- **Exception**: an event which causes the CPU to stop the normal flow of execution and go somewhere else (the exception handler)

- There are mainly two causes of exceptions:
  - **Software exceptions** (or **traps**): Triggered by a **program instruction**
    - Trap instruction: typically used to call OS routines (system calls)
    - Page fault: instruction accessed a page not mapped to memory
    - Divide-by-0: instruction performed a divide-by-0 arithmetic
    - Arithmetic overflow: instruction overflowed MAX_INT of register
  - **Hardware exceptions** (or **interrupts**): Triggered by **hardware event**
    - User has typed on the keyboard
    - A network packet has arrived
    - A file block read has completed

- In all cases, the OS **exception handler** is invoked

Handling exceptions

- What happens when an exception is triggered:
  1. Processor stops execution of user program.
  2. Processor stores information about exception (cause, PC).
  3. Processor jumps to the OS exception handler.
  4. Handler **creates backup** of program **register values** in memory.
  5. Handler inspects exception info and handles it accordingly.
     - While **overwriting** some of the registers that were backed up.
  6. Handler **restores** program **register values** from memory.
  7. Processor resumes execution of user program.

- Processor must provide precise register values at point of exception
  - Otherwise, when processor resumes, program will malfunction
  - Guaranteeing this is called a **precise exception**

Rules for Precise Exceptions

1. **All instructions before** the exception must have executed

2. **No instructions after** the exception must execute

- **Architectural state**: the state visible to the ISA (i.e. software)
  - State in architectural registers (For MIPS: t0, t1, t2, …)
  - State in data memory

- Architectural state at point of exception must reflect above rules

Precise Exceptions in In-order Processors is Easy

- Exceptions are typically detected at the EX stage
  - Stage where all arithmetic happens as well as address calculations
- On exception, flush EX and all previous stages (ID and IF)
  - Since in-order, guarantees instructions following EX do not writeback
  - Only state leading up to instruction at EX will be written to reg / mem

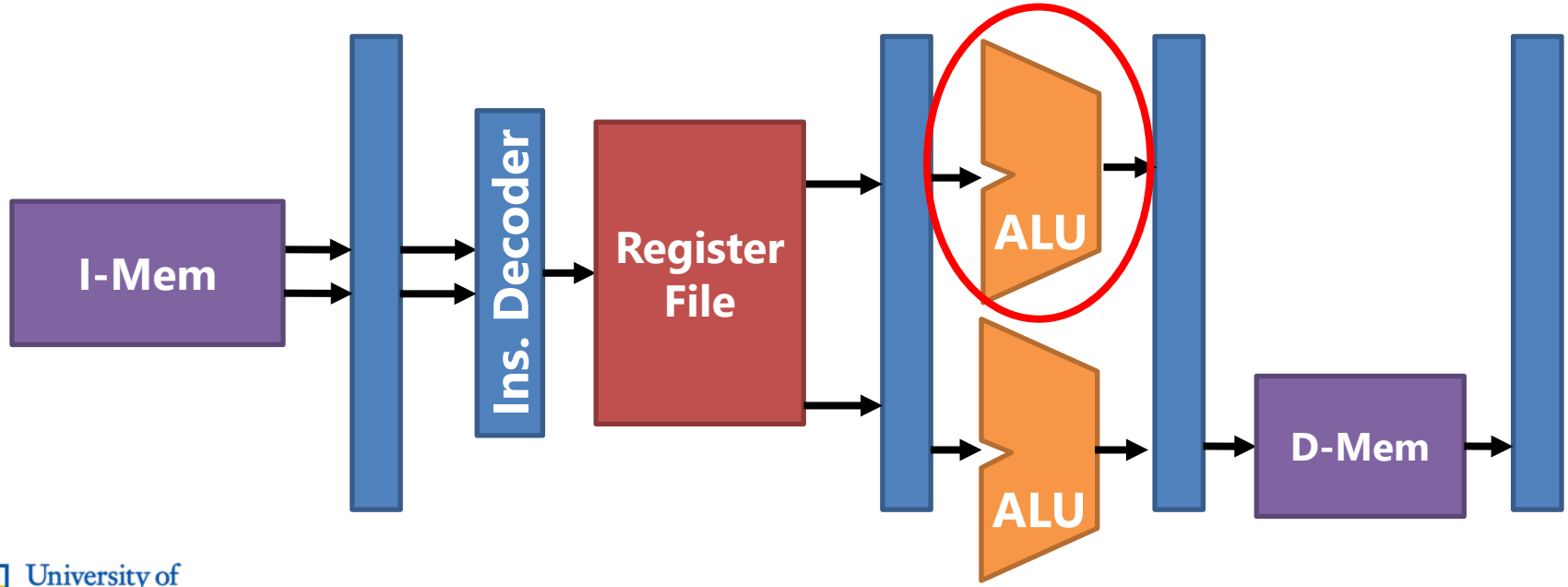

Precise Exceptions in Out-of-order Processors is Hard

- Suppose **div t2,t1,t0** and **li t0, 3** issue out-of-order as below
  - **div p2,p1,p0** triggers a divide-by-zero exception (**p0 = 0**)
  - But at point of exception, **t0** appears to be **3** due to **li p3, 3**!
    - At that point, **t0** is mapped to **p3** in the RAT (not **p0**)

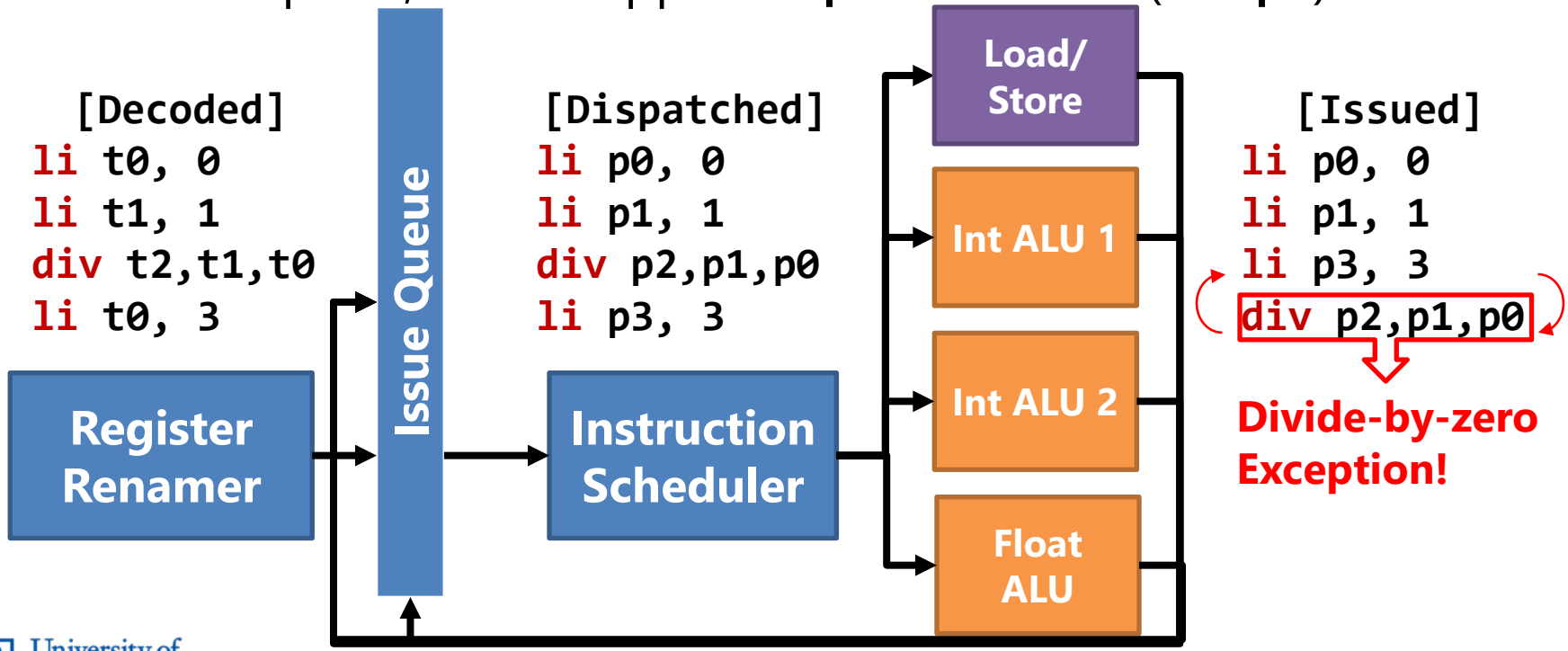

Precise Exceptions in Out-of-order Processors is Hard

- This is the challenge with out-of-order processors
  - Instructions execute and complete out-of-order
  - For precise exceptions, instructions must appear to complete in-order

- Solution: **update architectural state in-order**
  - When instructions **execute**, have them only update "**internal**" state
    - Physical registers
    - Store queue (MEM queues up stores instead of performing them)
  - Internal state is transferred to **visible** state during in-order **commit**
    - Physical registers are copied to architectural registers
    - Store queue entries are written to memory

In-order Commit (Retire)

- Decoded instructions are **stored** to ROB **in-order** when decoded
- Instructions **execute out-of-order** (updating **done?** field)
- Done instructions **commit in-order** to **Architectural Register File (ARF)**

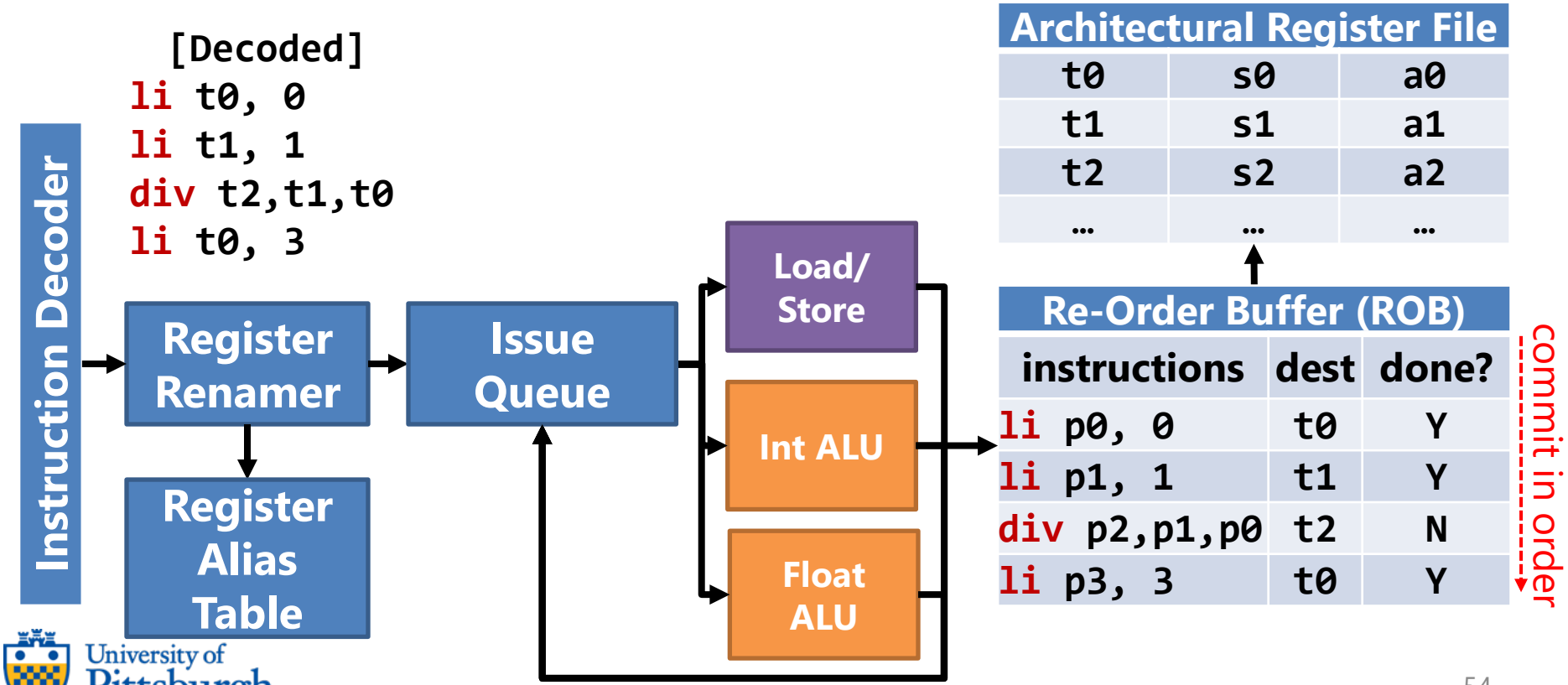

In-order Commit Example: Cycle 1

- At this point, all `li` instructions have completed but not the `div`
- `li p0, 0` and `li p1, 1` can commit on the next cycle
  - But not `li p3, 3` since we have in-order commit!

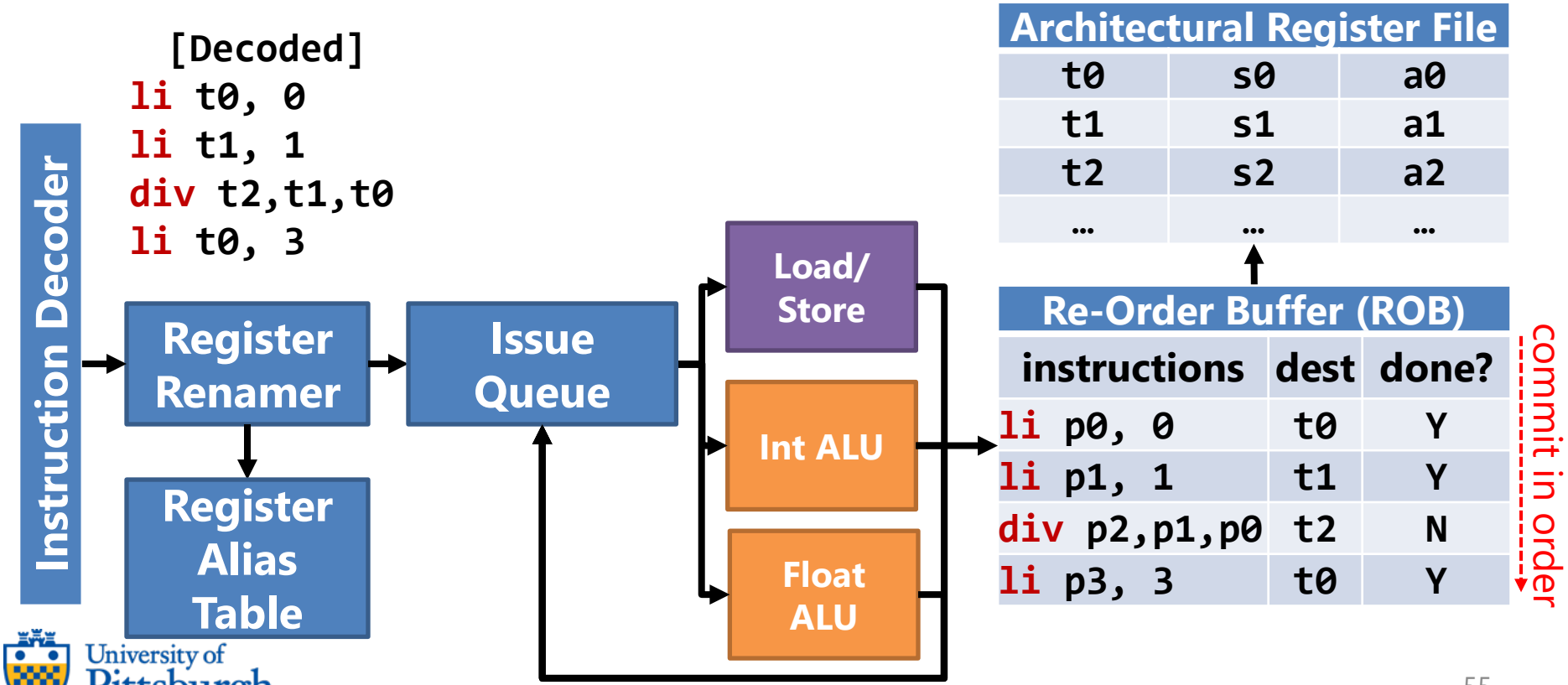

In-order Commit Example : Cycle 2

- `li p0, 0` and `li p1, 1` have committed updating `t0` and `t1`
- The ROB is still waiting on the completion of `div p2,p1,p0`
  - ROB prevents `li p3, 3` from committing ahead of `div p2,p1,p0`

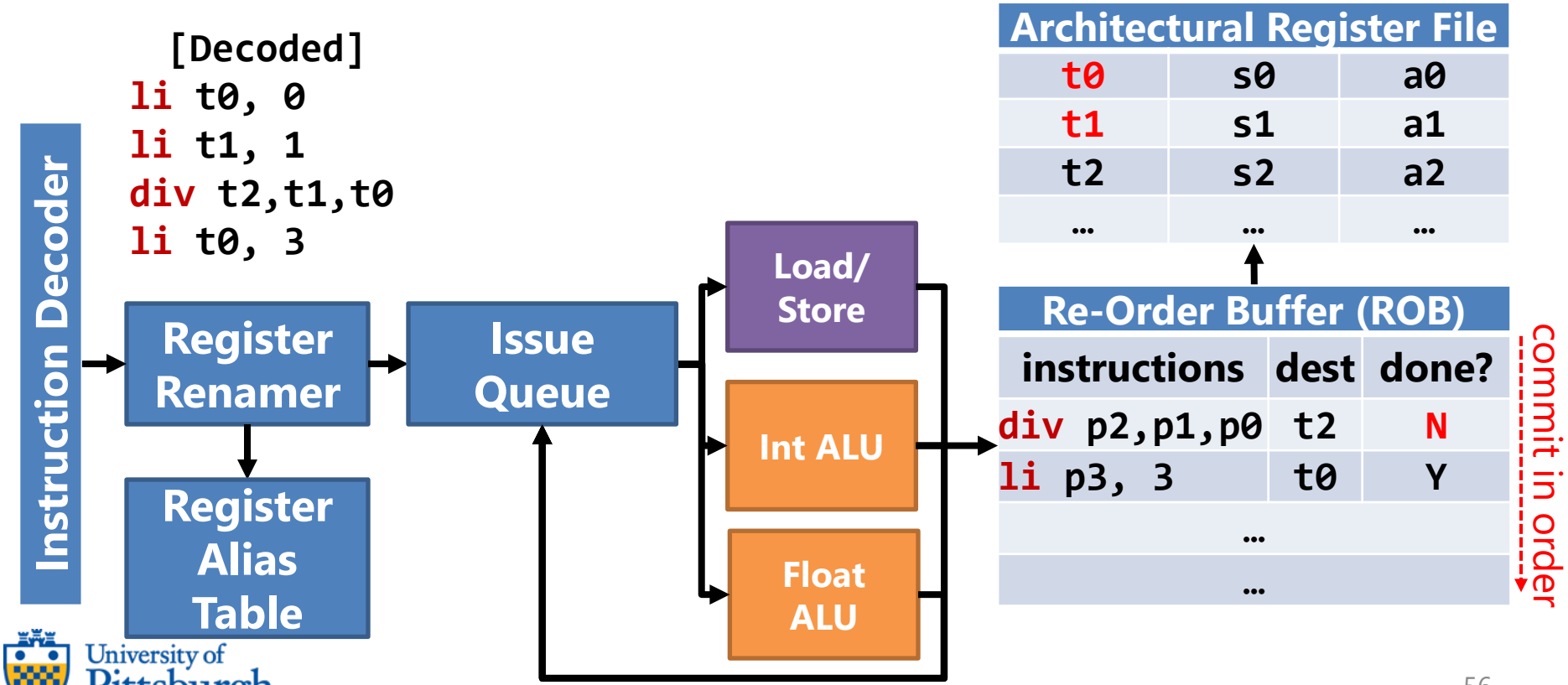

In-order Commit Example : Cycle 3

- Now **div p2,p1,p0** is finally done and is ready to commit
  - On the next cycle, **t2** and **t0** will update in the ARF
- **Architectural Register File** maintains a **precise** architectural state

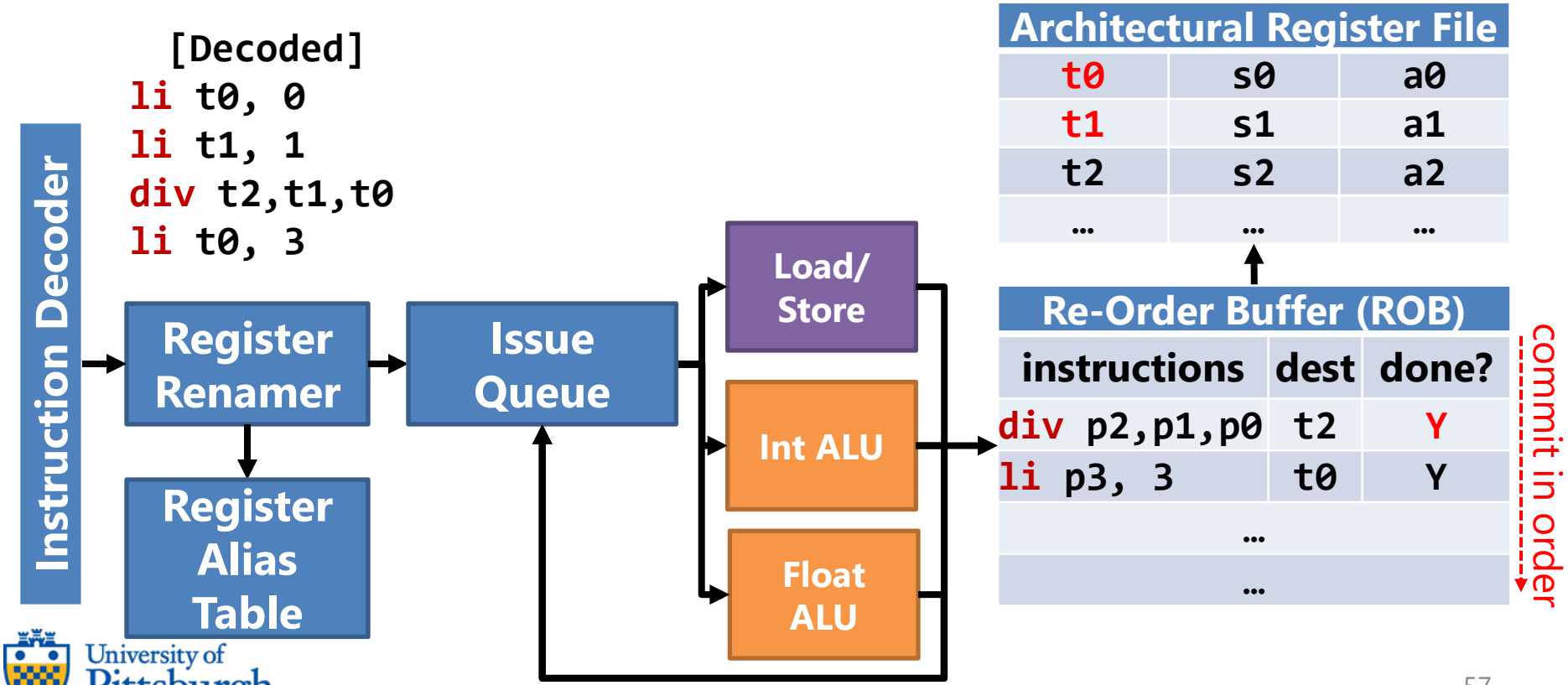

Precise Exception Example: Cycle 1

- At this point, all instructions have completed but not the **div**
- **div** instruction has caused a division-by-zero-exception and marks **ex** bit

```
[Decoded]
li t0, 0
li t1, 1
div t2,t1,t0
li t0, 3
```

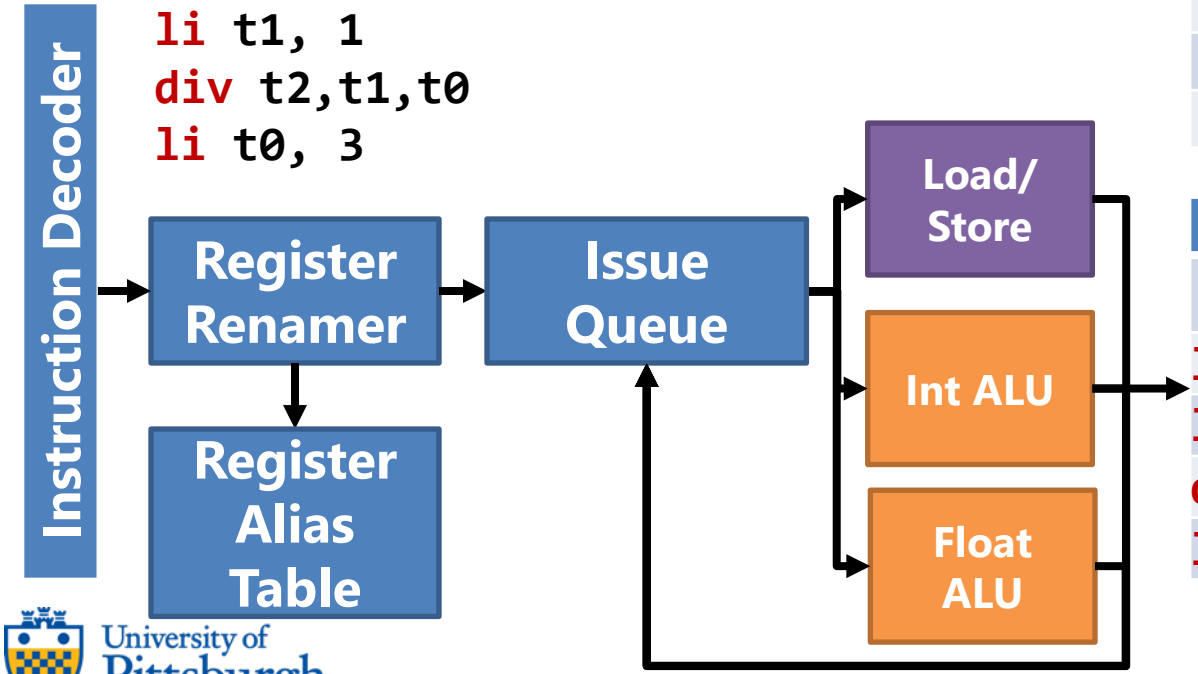

Architectural Register File

t0	s0	a0
t1	s1	a1
t2	s2	a2
…	…	…

Re-Order Buffer (ROB)

instructions	dest	done	ex
li p0, 0	t0	Y	N
li p1, 1	t1	Y	N
div p2,p1,p0	t2	Y	Y
li p3, 3	t0	Y	N

Precise Exception Example: Cycle 2

- `li p0, 0` and `li p1, 1` are allowed to commit updating `t0` and `t1`

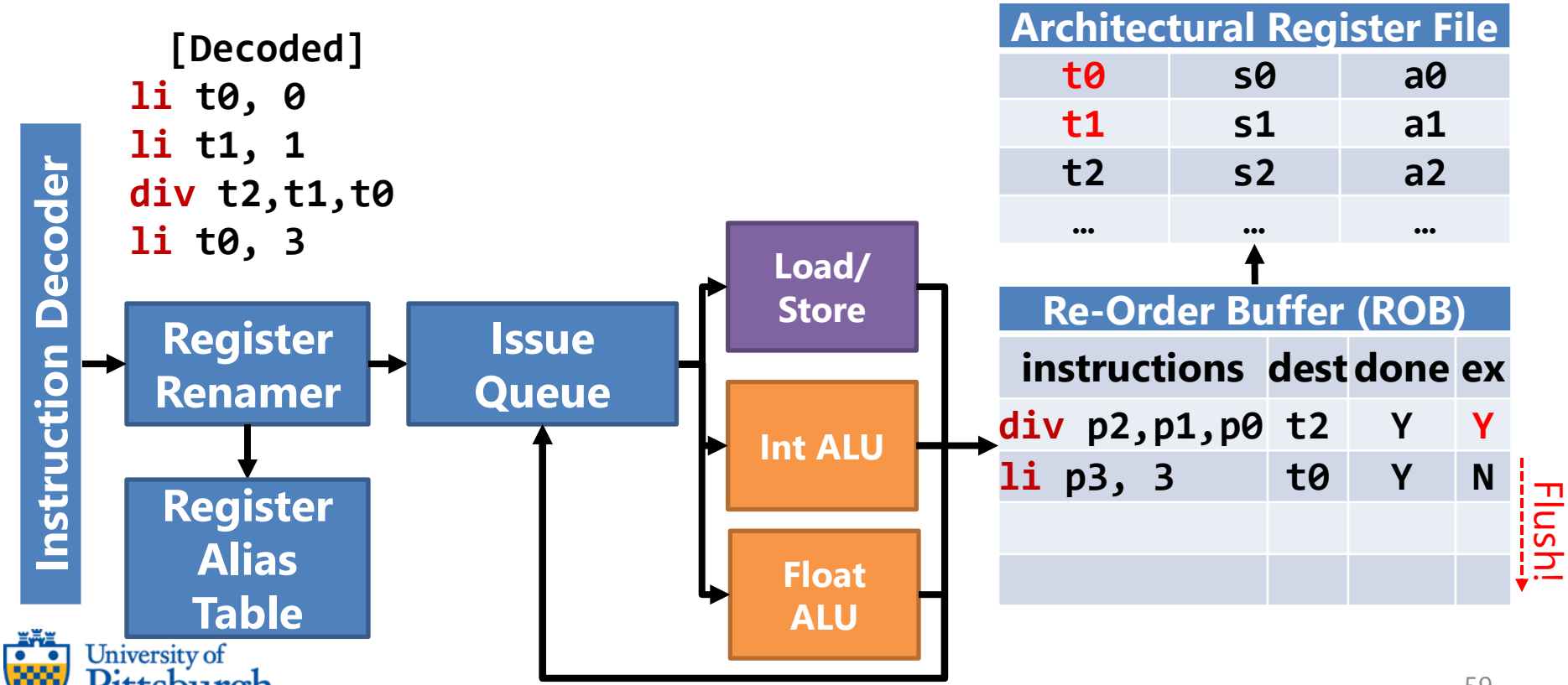

Precise Exception Example: Cycle 3

- Now that **div** reached the head of the ROB, entire ROB flushed
- All instructions before have committed, all instructions after have not

☞ **Architectural Register File** has maintained **precise** architectural state

```
[Decoded]
li t0, 0
li t1, 1
div t2,t1,t0
li t0, 3
```

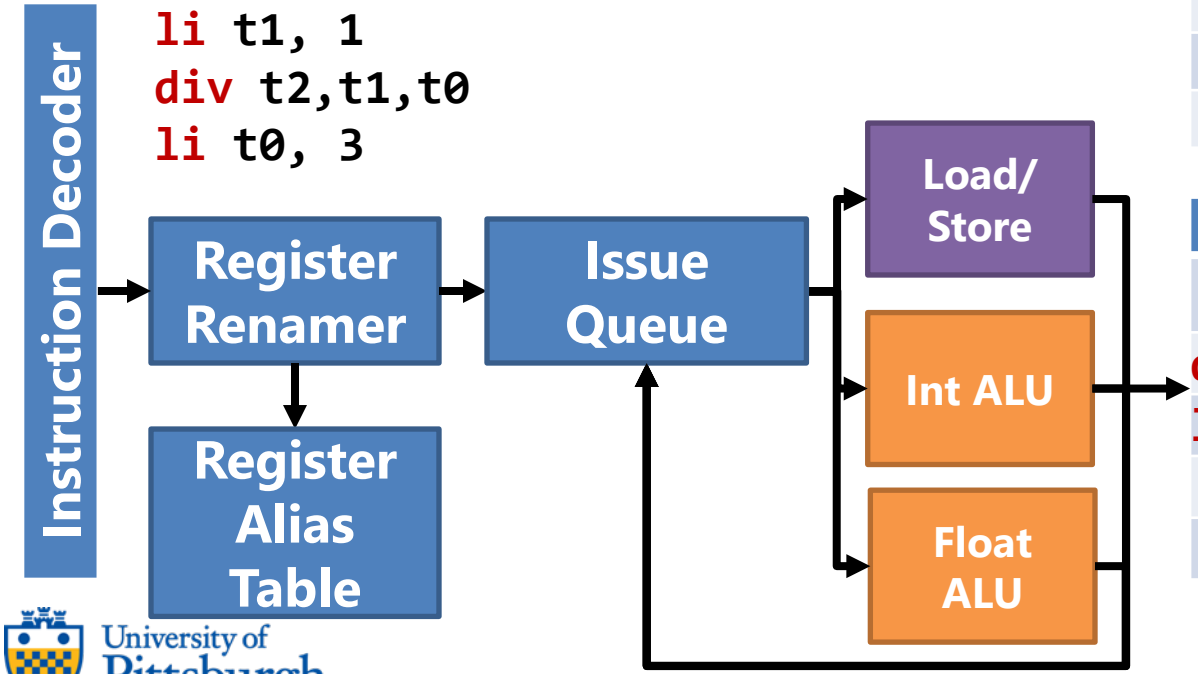

Architectural Register File

t0	s0	a0
t1	s1	a1
t2	s2	a2
…	…	…

Re-Order Buffer (ROB)

instructions	dest	done	ex
div p2,p1,p0	t2	Y	Y
li p3, 3	t0	Y	N

Flush!

University of Pittsburgh

In-order Commit also solves branch misprediction

- What if processor finds out it **mispredicted** a branch?
  - **Flush** instructions after the branch in the ROB (also in Issue Queue)
  - **Restore** a **RAT+Preg Free List snapshot** taken when branch was decoded

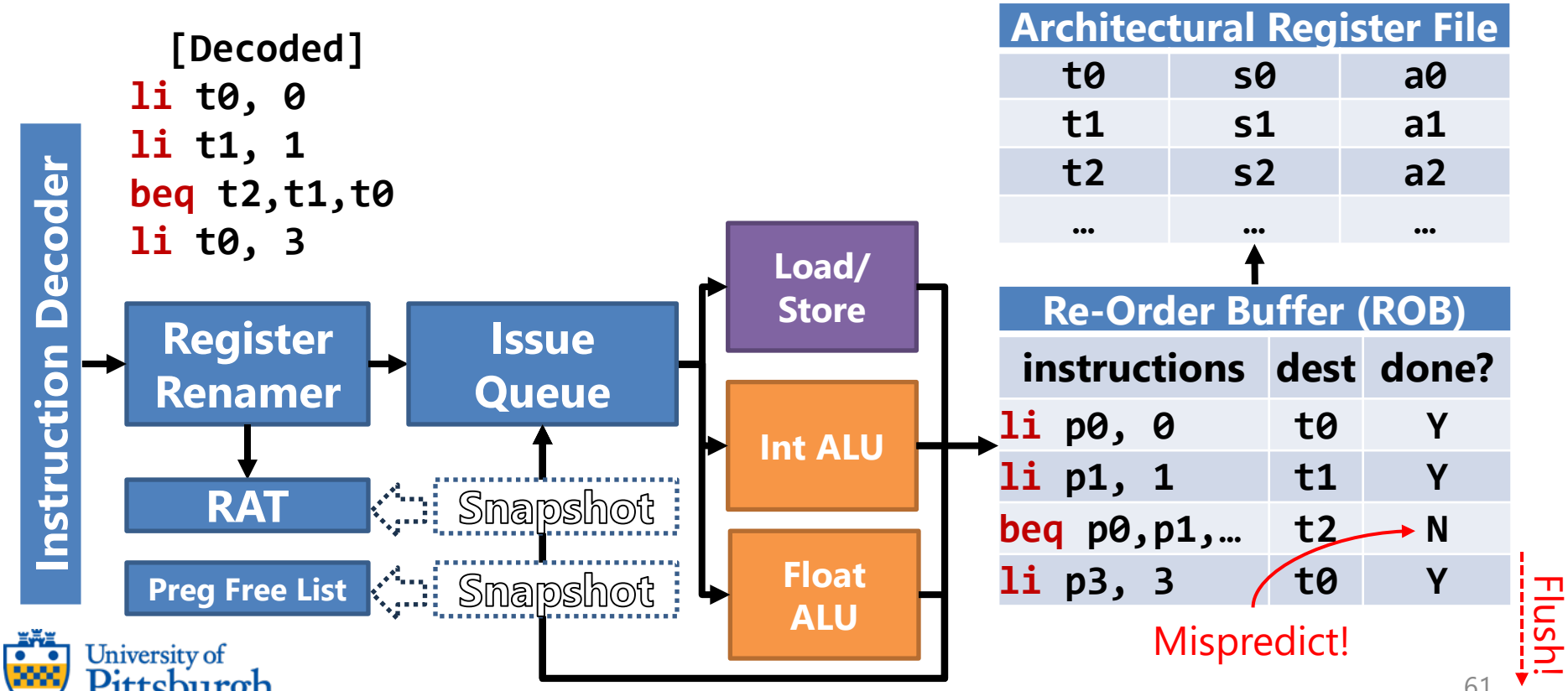

In-order Commit also solves physical register recycling

- When can the processor recycle physical registers?
  - The **prev** column records previous physical register mapped to **dest**.
  - When `li p3, 3` commits, `p0` previously mapped to `t0` can be recycled

```
[Decoded]
li t0, 0
li t1, 1
beq t1,t0,label
li t0, 3
```

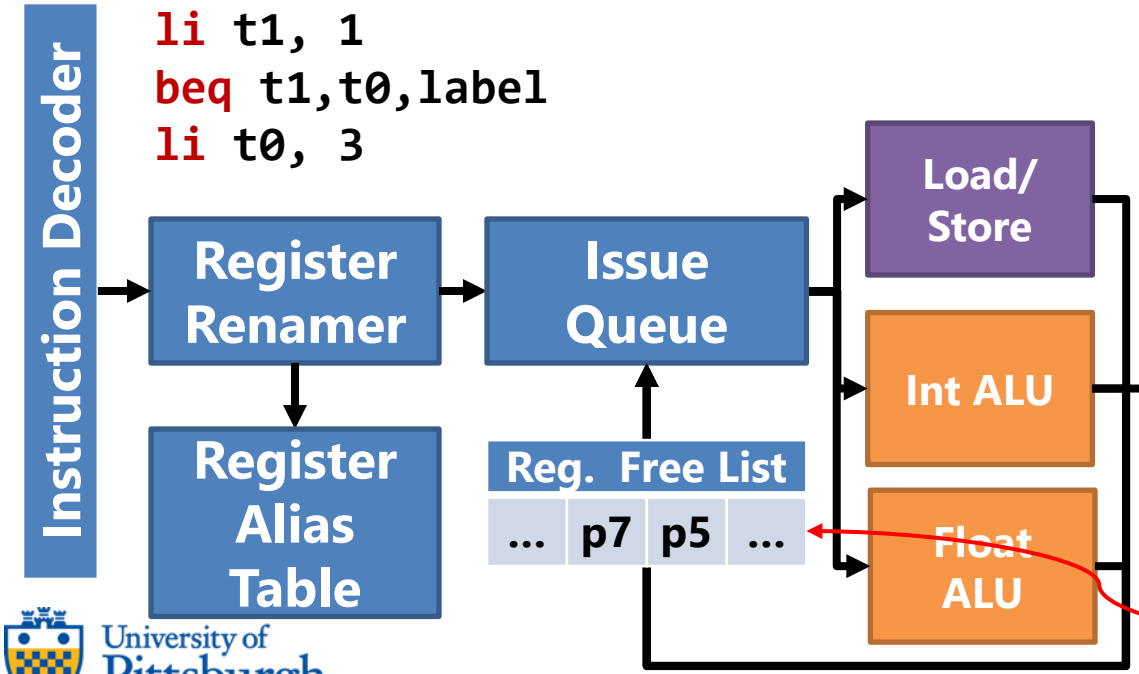

Architectural Register File

t0	s0	a0
t1	s1	a1
t2	s2	a2
…	…	…

Re-Order Buffer (ROB)

instructions	dest	prev
li p0, 0	t0	-
li p1, 1	t1	-
beq p1,p0,…	t2	-
li p3, 3	t0	p0

Recycle p0 on commit

In-order Commit also solves physical register recycling

- When can the processor recycle physical registers?
  - The **prev** column records previous physical register mapped to **dest**.
  - When `li p3, 3` commits, `p0` previously mapped to `t0` can be recycled

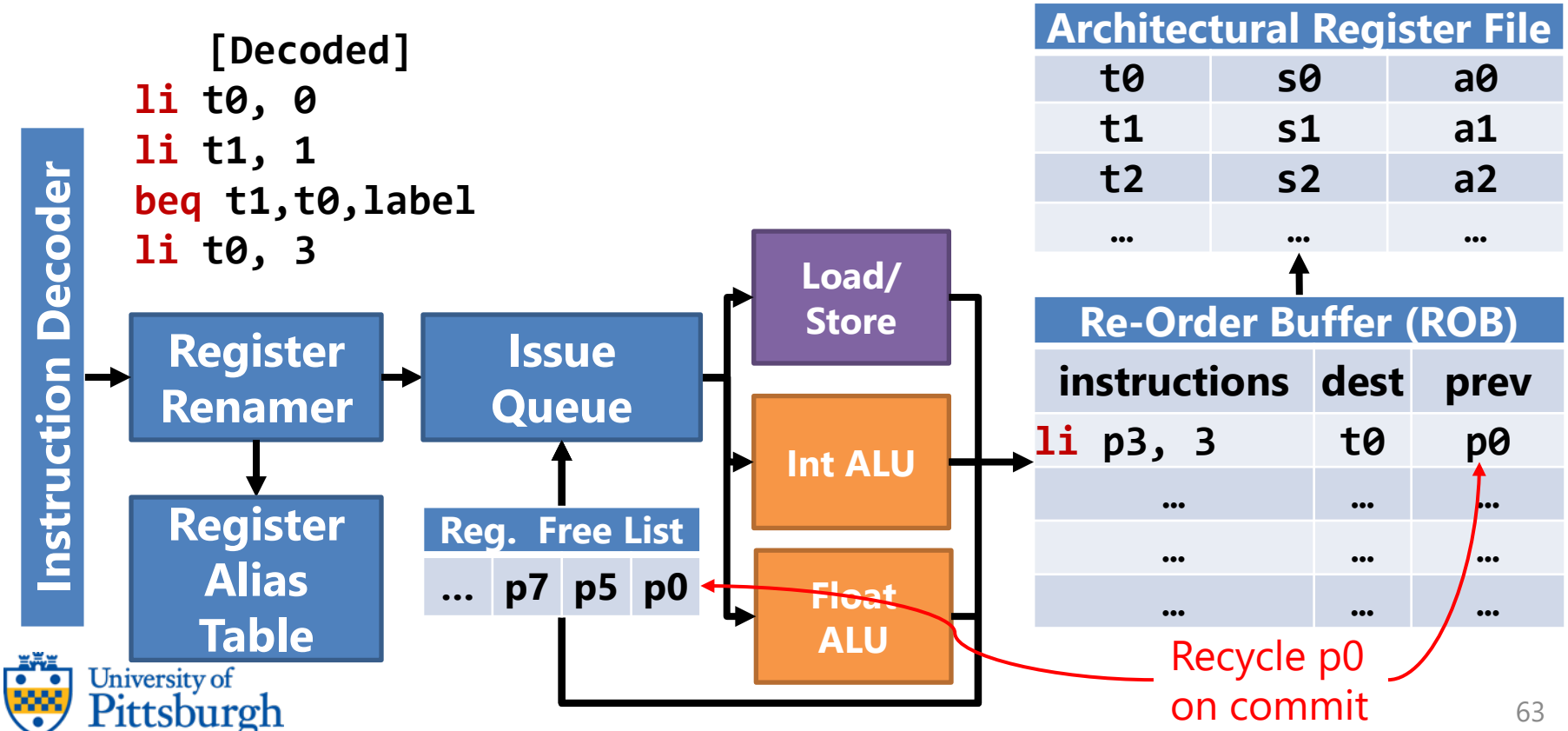

Issue queue is typically much smaller than ROB

- Both issue queue and ROB contain instructions. Why not combine?

- Set of instructions contained in each are different
  - ROB: All instructions in instruction window that are in flight
    - Including executed instructions that are waiting to retire
  - Issue queue: Only instructions that have not yet issued

- Means issue queue can be kept much smaller than the ROB
  - Important because issue queue requires parallel tag matching (Often in the critical path of CPU cycle time)
  - ROB is just a FIFO queue that can be scaled more easily

Real Life Superscalars

The ARM Cortex-A8 architecture

- The ARM Cortex-A8 is an **in-order superscalar** processor
  - Note how computation is done on the **architectural register file**

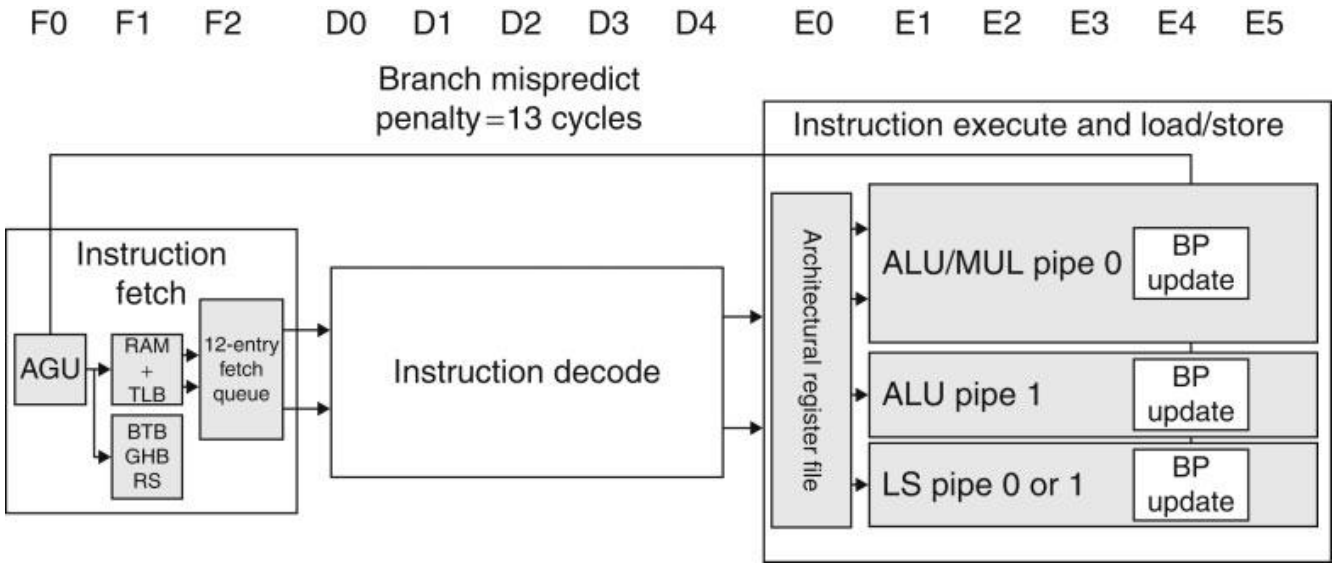

FIGURE 4.75 The A8 pipeline. The first three stages fetch instructions into a 12-entry instruction fetch buffer. The *Address Generation Unit* (AGU) uses a ***Branch Target Buffer*** **(BTB)**, ***Global History Buffer*** **(GHB)**, and a ***Return Stack*** **(RS)** to predict branches to try to keep the fetch queue full. Instruction decode is five stages and instruction execution is six stages.

The AMD Opteron X4 Microarchitecture

- The AMD Opteron is an **out-of-order superscalar** processor
  - **Commit unit** oversees retiring instructions from operation queue

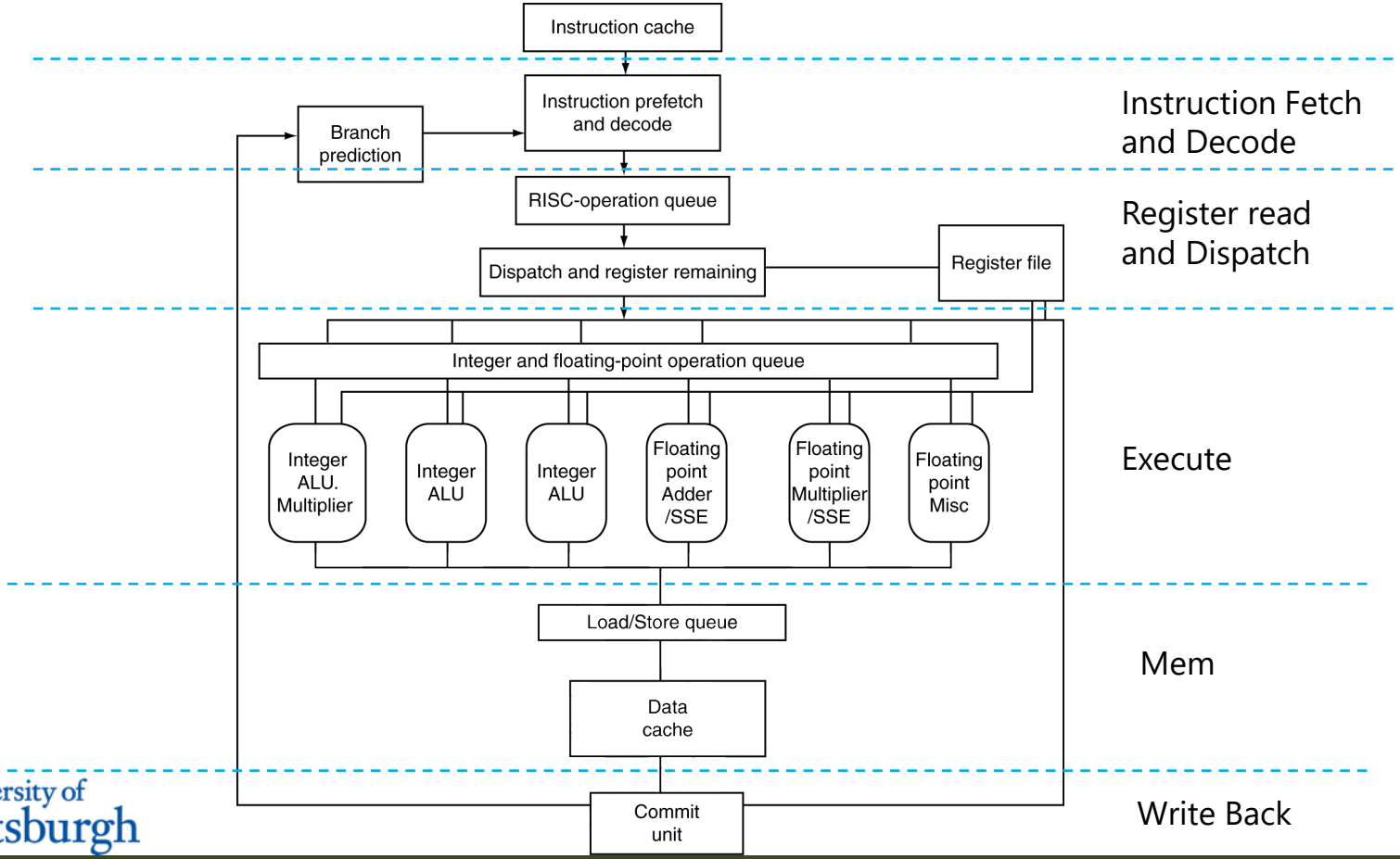

The Intel Core i7 architecture

- The Intel Core i7 is another **out-of-order superscalar** processor

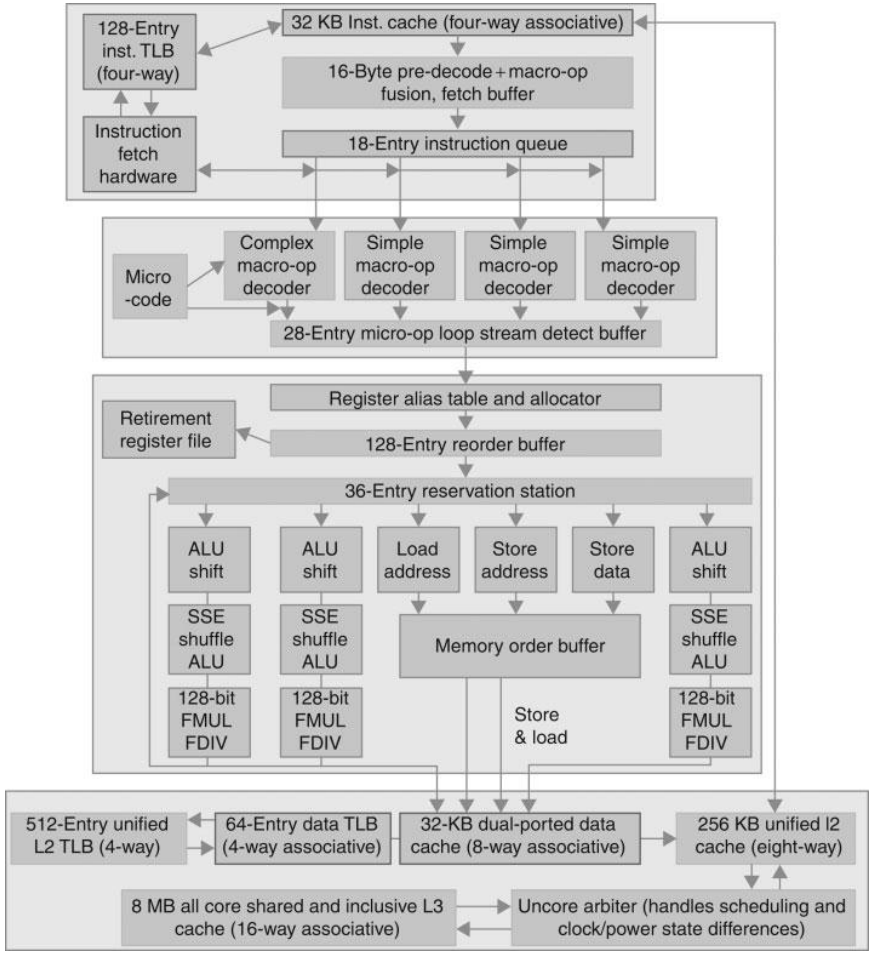

FIGURE 4.77 The Core i7 pipeline with memory components. The total pipeline depth is 14 stages, with **branch mispredictions costing 17 clock cycles**. This design can buffer 48 loads and 32 stores. It is a 4-wide processor but has 6 execution units of different types to reduce structural hazards.

Intel Core i7 Performance

- Ideal CPI = 0.25 since this is a 4-wide processor

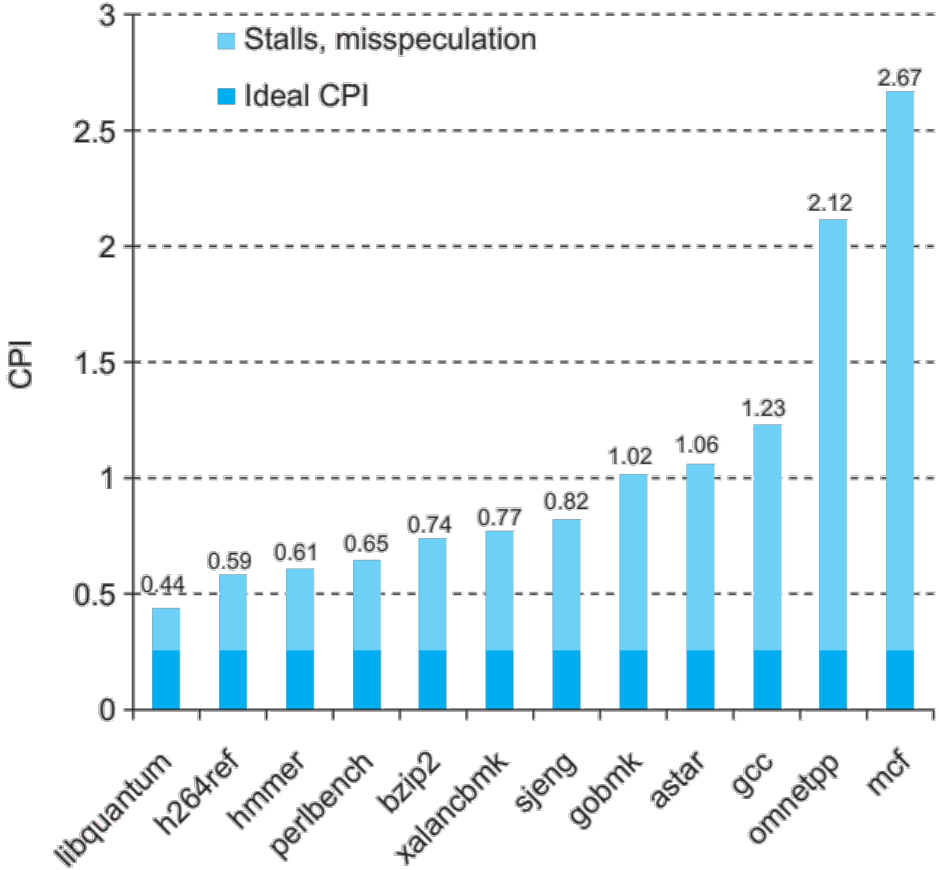

FIGURE 4.78 CPI of Intel Core i7 920 running SPEC2006 integer benchmarks.

Intel Core i7 Impact of Branch Misprediction

- Due to deep pipeline, tiny misprediction can have outsized impact

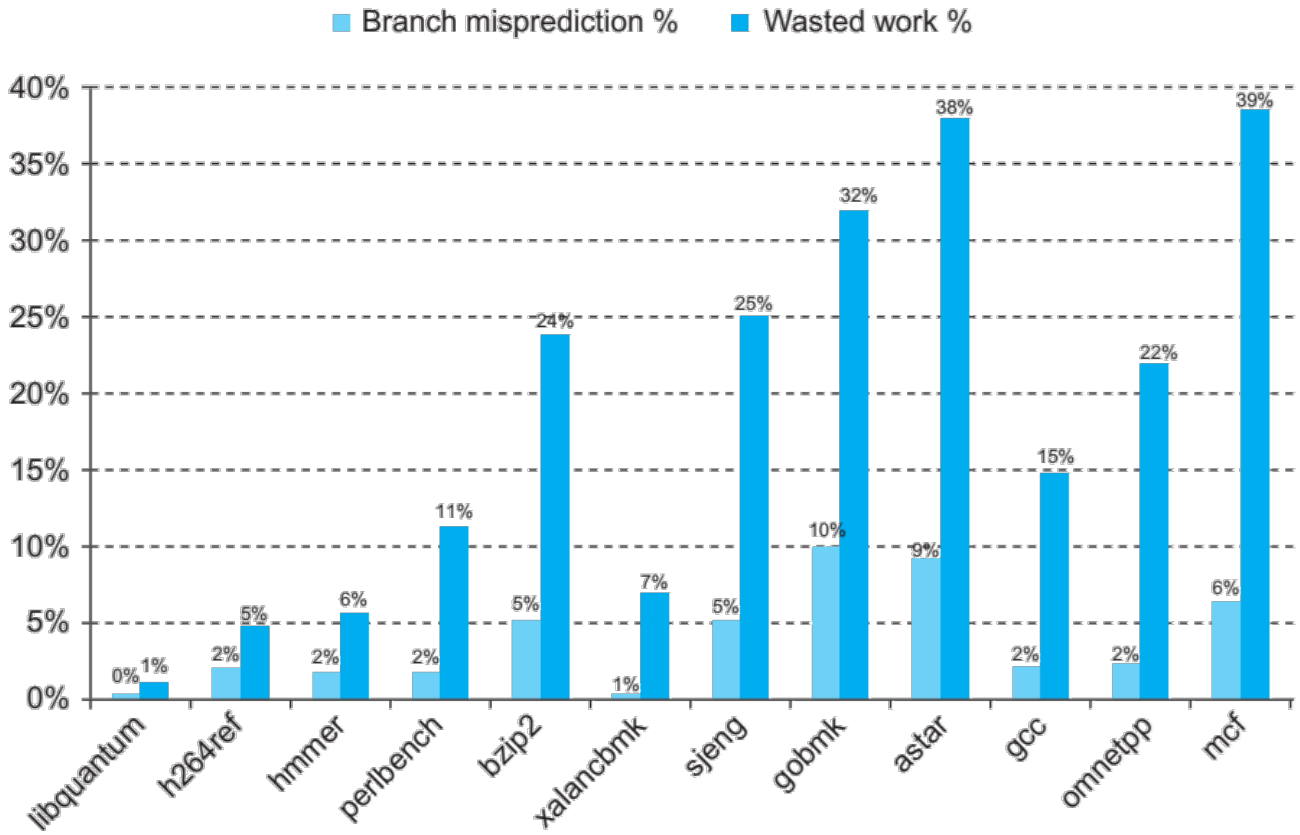

FIGURE 4.79 Percentage of branch mispredictions and wasted work due to unfruitful speculation of Intel Core i7 920 running SPEC2006 integer benchmarks.

University of Pittsburgh

Benefit of increasing width of superscalar processors

- Can wider and wider processors give us limitless speedups?

- There is a **fundamental limit** to achievable IPC
  - Amount of **ILP (Instruction Level Parallelism)** in code

- What limits ILP?
  - Data dependencies: Stalls due to **RAW** dependencies
  - Control dependencies: Flushes due to branch misprediction
    - All branches are predictable in theory so not a fundamental limit
    - Perfect branch prediction assumed when calculating ILP

- ILP is a **property of the program**, not the processor
  - How much ILP is there in programs?

Remember this slide from the introduction?

- 3 workers = fastest but low utilization:

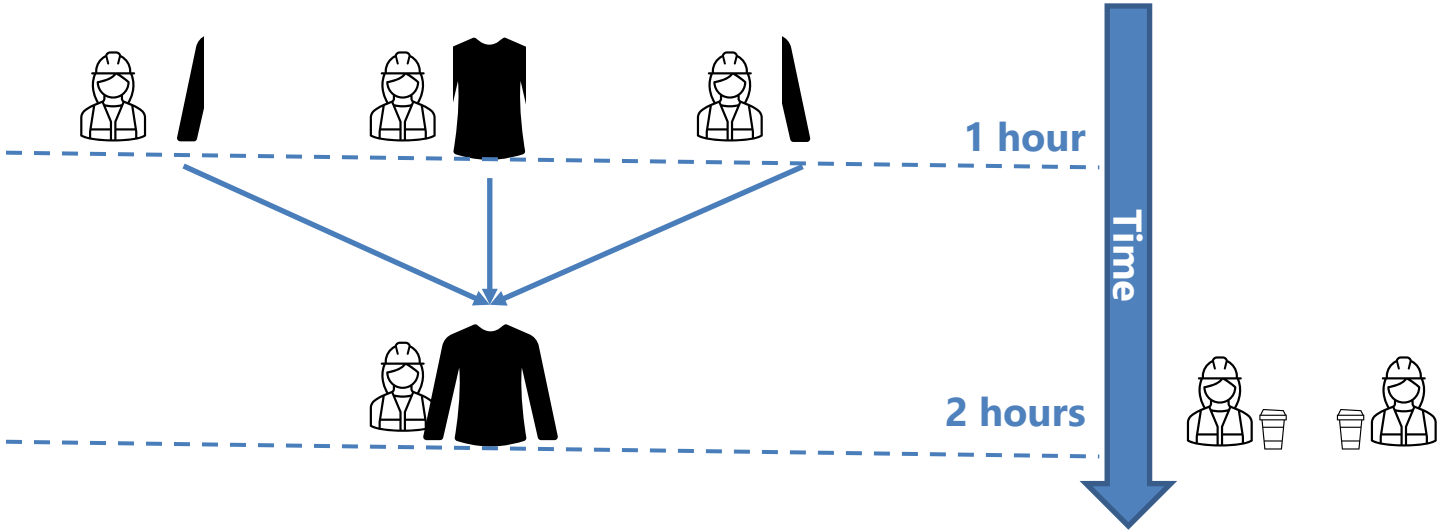

- During the 2nd hour, 2 workers were slacking over coffee.
- ILP = 4 instructions / 2 cycles = 2, when CPU width = 3 (utilization = 66%)
- Utilization depends on the ILP present in the data dependence graph.

ILP present in different programs

- After renaming, theoretical limit of IPC is 35 ~ 4003!

Benchmark	IPC No Renaming	IPC Register Renaming	IPC Memory Renaming	IPC r29 Removed	IPC 10K Window
compress95	3.12	26.25	73.88	226.33	18.89
cc1	3.61	39.79	41.63	239.96	86.45
go	2.50	49.15	53.77	141.46	70.71
ijpeg	2.41	55.47	93.60	94.11	52.94
li	3.56	19.60	19.61	81.45	27.70
m88ksim	2.76	19.93	62.06	363.26	20.50
perl	3.47	82.01	127.57	153.05	128.84
vortex	4.57	26.26	26.27	271.97	92.04
applu	2.82	106.65	2037.61	2076.06	78.67
apsi	3.6	54.89	183.44	1224.86	79.56
fpppp	3.33	103.62	774.13	1837.96	134.62
hydro2d	3.09	144.80	147.67	242.08	52.14
mgrid	3.34	1876.11	3933.03	4003.44	286.48
su2cor	3.22	38.21	34.81	55.56	47.60
swim	3.10	112.08	112.08	275.21	89.15
tomcatv	3.61	32.85	61.47	119.67	58.91
turb3d	3.42	370.98	482.24	3652.46	0
wave5	3.25	29.28	35.71	35.71	0

Matthew Postiff et al. "The Limits of Instruction Level Parallelism in SPEC95 Applications". ACM SIGARCH Computer Architecture News, 1999

Cost of increasing width of superscalar processors

- Achieving the theoretical limit would be awesome
  - In reality, superscalars are typically no more than 10-wide

- Increasing width of superscalar processors has costs:
  - To leverage ILP, a large instruction window is needed, meaning:
    - Large issue queue size
    - Large physical register file size
  - Upsizing above structures negatively impacts **cycle time**
    - Time to search and schedule issue queue
    - Time to access register file (increased size and number of ports)
  - It also negatively impacts **power consumption**

Recap:
VLIWs vs SuperScalars

Ability to deal with hazards

- Hazards prevent the full exploitation of ILP (Instruction Level Parallelism)
- Which processor type has the advantage on each of these aspects?

	VLIW	Out-of-order SuperScalar
Dealing with data hazards involving registers		
Dealing with data hazards involving memory locations		
Dealing with control hazards		
Large instruction window for scheduling around hazards		

Ability to operate energy efficiently

- We learned that performance and power are two sides of the same coin.
- Which processor requires these power-hungry control structures?

	VLIW	Out-of-order SuperScalar
Big Register File		
Register Alias Table		
Issue Queue		
Data Forwarding Wires		